Attachments
for FX-50

300N6 6-ROW CORNHEADER (HYDRO VERSION) (1/99-)

968F OR MF600SERIES - MAIZE HEADER

DC510 DIRECT CUT HEADER, FROM S/N 4900101 ONWARDS (3/03-)

F3BE0684E*B001 ENGINE - 500365700 - 84432796 (6/01-)

F3BE0684EB003 ENGINE - 504082367 - 84819476 (5/04-)

RI450 ROW INDEPENDENT CORNHEADER - UNTIL S/N 513168220 (1/03-)

RI600 ROW INDEPENDENT CORNHEADER - UNTIL S/N 523168115 (1/03-)

346W SP FORAGE PICK-UP HEAD (1/03-)

356W SP FORAGE PICK-UP HEAD (1/03-)

366W SP FORAGE PICK-UP HEAD (1/03-)

www.kormo.by
Kormo.by

Figure Search for FX50 SELF-PROPELLED FORAGE HARVES

0.0016(01) MAIN SECTIONS
0.0017(01) SECTION LIST 1
0.0018(01) SECTION LIST 2
0.0018A(01) SECTION LIST 2
0.0019(01) SECTION LIST 3
0.0020(01) SECTION LIST 4
0.0021(01) SECTION LIST 5
0.0022(01) SECTION LIST 6
0.0023(01) SECTION LIST 7
0.0023A(01) SECTION LIST 7
0.0023B(01) SECTION LIST 7
0.0024(01) SECTION LIST 8
0.0025(01) SECTION LIST 9
0.0026(01) SECTION LIST 10
0.0027(01) SECTION LIST 11
0.0028(01) SECTION LIST 12
0.0029(01) SECTION LIST 13
0.0029A(01) SECTION LIST 13
0.0029B(01) SECTION LIST 13
0.0029C(01) SECTION LIST 13
0.0030(01) SECTION LIST 14
0.0031(01) SECTION LIST 15
0.0032(01) SECTION LIST 16
0.0034(01) SECTION LIST 18
0.0035(01) SECTION LIST 19
0.0036(01) SECTION LIST 20
0.0037(01) VERSION LIST
0.0038(01) IDENTIFICATION PLATES
0.0039(01) MAINTENANCE PARTS
0.0041(01) CODE TABLE
0.0041A(01) CODE TABLE
01.000(01) SECTION LIST 1
01.01(01) COMPLETE ENGINE
02.000(01) SECTION LIST 2
02.000(02) SECTION LIST 2
02.01(01) FAN
02.02(01) AIR FILTER - MUFFLER
02.04(01) AIR CIRCUIT
02.05(01) WATER CIRCUIT
02.06(01) RADIATOR AND INTERCOOLER
02.07(01) RADIATOR AND INTERCOOLER
02.08(01) RADIATOR AND INTERCOOLER
02.09(01) OIL AND FUEL COOLER & CONDENSOR
02.10(01) RADIATOR, SUPPORTS
02.11(01) FUEL TANK
02.12(01) FUEL TANK
02.13(01) FUEL TANK
02.14(01) HEATING

KORMO.BY
Kormo.by

02.14A(01) BLOCK HEATER
02.16(01) ENGINE, SUPPORT
02.70(01) ALTERNATOR - D415
03.000(01) SECTION LIST 3
03.01(01) GEARSHIFT CONTROLS
03.02(01) GEARSHIFT CONTROLS
03.03(01) GEARBOX
03.04(01) GEARBOX
03.05(01) GEARBOX, STUDS
03.06(01) DIFFERENTIAL
03.07(01) BRAKE DISCS
03.08(01) GEARS
03.09(01) GEARS
03.10(01) GEARS
03.11(01) GEARS
03.12(01) HYDROSTATIC DRIVE, SPECIFIC PARTS
03.13(01) DIFFERENTIAL LOCK CONTROL
03.14(01) DIFFERENTIAL LOCK CONTROL
03.15(01) BRAKE ASSY
03.16(01) CIRCUIT FOR HYDRAULIC BRAKES - C305
03.16A(01) CIRCUIT FOR HYDRAULIC BRAKES - D306
03.17(01) PEDALS HYDRAULIC BRAKES
03.18(01) CIRCUIT FOR HYDRAULIC BRAKES
03.19(01) TRANSMISSION HANDBRAKE
03.20(01) TRANSMISSION HANDBRAKE
03.21(01) DRIVE SHAFTS
03.22(01) EXTENSION KIT
03.23(01) END REDUCTION 10/75
03.24(01) END REDUCTION 10/75
04.000(01) SECTION LIST 4
05.000(01) SECTION LIST 5
05.01(01) FIXED STEERING AXLE
05.02(01) FIXED STEERING AXLE
05.03(01) MECHANICAL 4-WHEEL DRIVE, AXLE
05.04(01) MECHANICAL 4-WHEEL DRIVE, AXLE
05.05(01) MECHANICAL 4-WHEEL DRIVE, AXLE
05.06(01) MECHANICAL 4-WHEEL DRIVE, AXLE
05.07(01) MECHANICAL 4-WHEEL DRIVE, AXLE
05.08(01) MECHANICAL 4-WHEEL DRIVE, AXLE
05.09(01) MECHANICAL 4-WHEEL DRIVE, AXLE
05.10(01) MECHANICAL 4-WHEEL DRIVE, GEARBOX
05.11(01) MECHANICAL 4-WHEEL DRIVE, GEARBOX
05.12(01) MECHANICAL 4-WHEEL DRIVE, CLUTCH
05.13(01) MECHANICAL 4-WHEEL DRIVE, POWER TAKE-OFF
05.14(01) ADJUSTABLE STEERING AXLE, SPINDLE, NA
05.15(01) ADJUSTABLE STEERING AXLE, TIE-ROD, NA
05.16(01) ADJUSTABLE STEERING AXLE, NA
06.000(01) SECTION LIST 6
06.01(01) INSTRUMENT PANEL AND WIRING LOOM
06.02(01) INSTRUMENT PANEL AND WIRING LOOM
06.03(01) INSTRUMENT PANEL AND WIRING LOOM
06.04(01) INSTRUMENT PANEL

kormo.by

06.05(01) WIRING LOOM, STEERING COLUMN
06.06(01) CONTROL LEVER FOR HYDRAULICS
06.07(01) ELECTRONIC CONTROL UNIT FOR HYDRAULICS
06.08(01) ELECTRONIC CONTROL UNIT FOR HYDRAULICS
06.09(01) CAB ROOF, ELECTRICITY
06.10(01) ELECTRIC CONTROL BOX
06.11(01) ELECTRIC CONTROL BOX
06.12(01) ELECTRIC WIRING, SPOUT AND FLASHERS
06.13(01) ADDITIONAL WORK LIGHT: SPOUT
06.14(01) CHOPPER, HEIGHT INDICATOR
06.15(01) ELECTRIC WIRING, OPERATOR'S PLATFORM
06.16(01) CUTTERHEAD, ELECTRIC WIRING
06.17(01) ELECTRIC WIRING, LOWER FRAME
06.18(01) ELECTRIC WIRING, BATTERY
06.19(01) FRONT ILLUMINATION AND HARNESSES
06.20(01) ELECTRIC WIRING, IVECO ENGINE
06.22(01) INDICATOR "AUTOPILOT"
06.23(01) REAR LIGHTS - NOT FOR NA
06.23A(01) REAR LIGHTS - FOR NA ONLY
06.24(01) ILLUMINATION KIT, ROW INDEPENDENT HEADERS
06.25(01) WORK LIGHTS, REAR
06.26(01) REAR LIGHTS
06.51(01) TERMINALS AND TERMINAL CONNECTORS
06.52(01) TERMINALS AND TERMINAL CONNECTORS
06.53(01) TERMINALS AND TERMINAL CONNECTORS
06.54(01) TERMINALS AND TERMINAL CONNECTORS
06.55(01) TERMINALS AND TERMINAL CONNECTORS
06.56(01) CENTRAL LUBRICATION SYSTEM, TERMINALS AND TERMINAL CONNECTORS
07.000(01) SECTION LIST 7
07.000(02) SECTION LIST 7
07.000(03) SECTION LIST 7
07.01(01) HYDRAULIC TANK
07.02(01) HYDRAULIC TANK
07.03(01) HYDRAULIC TANK
07.04(01) STEERING VALVE
07.05(01) STEERING VALVE
07.06(01) STEERING VALVE
07.07(01) STEERING VALVE
07.08(01) HYDRAULIC MOTOR, CUTTERHEAD REVERSE DRIVE
07.09(01) STEERING CYLINDER, 4- WHEEL DRIVE
07.10(01) STEERING CYLINDERS, 2- WHEEL DRIVE
07.11(01) HYDRAULIC PARTS FOR CUTTERHEAD
07.12(01) HYDRAULIC LINES, SPOUT AND FRONT HYDRAULIC LINES
07.14(01) CYLINDER FOR SPOUT
07.15(01) CYLINDER FOR SPOUT DEFLECTORS
07.15A(01) SPOUT, VALVE
07.16(01) HYDRAULIC PUMP - C322
07.16A(01) HYDRAULIC PUMP - D323
07.17(01) HYDRAULIC PIPES
07.18(01) HYDRAULIC FOR PUMP
07.19(01) HYDRAULIC LINES TO LOW PRESSURE VALVE
07.20(01) HYDRAULIC LINES TO LOW PRESSURE VALVE

kormo.by

07.21(01) HYDROSTATIC TRACTION
07.22(01) HYDROSTATIC TRACTION
07.22A(01) HYDROSTATIC TRACTION - D306
07.23(01) HYDROSTATIC FEEDROLLS
07.23A(01) HYDROSTATIC FEEDROLLS - D306
07.24(01) HYDROSTATIC MOTOR - TRACTION
07.24A(01) HYDROSTATIC MOTOR - FEEDROLLS
07.26(01) ACCUMULATORS
07.27(01) REAR HYDRAULIC LINES
07.28(01) HYDRAULIC LINES TO MAIN VALVE
07.29(01) HYDRAULIC LINES TO MAIN VALVE, WITHOUT CROP PROCESSOR
07.30(01) HIGH PRESSURE FILTER
07.31(01) COMPENSATION VALVE AND "E.M.R." VALVE
07.32(01) SB12 VALVE, 5 FUNCTIONS
07.33(01) SB12 VALVE, 4 FUNCTIONS
07.34(01) SB12 VALVE, 6 FUNCTIONS, CROP PRO PLUS TM
07.35(01) HYDRAULICS FOR HIGH CAPACITY AND TANK
07.36(01) HIGH CAPACITY HYDRAULICS, VALVES AND LINES
07.37(01) HIGH CAPACITY HYDRAULICS, VALVES AND LINES
07.38(01) TRANSMISSION HOUSING
07.40(01) CROP PRO PLUS TM, HYDRAULICS ON BASE MACHINE FOR CYLINDER (HYDRO DRIVE VERSION)
07.41(01) CROP PRO PLUS TM, HYDRAULICS ON BASE MACHINE FOR HYDRO ENGINE
07.42(01) CROP PRO PLUS TM, HYDRAULICS ON CROP PRO PLUS (HYDRO DRIVE VERSION)
07.42A(01) CROP PRO PLUS TM, HYDRAULICS ON CROP PRO PLUS, BELT DRIVE
07.43(01) CROP PRO PLUS TM, HYDRAULICS ON BASE MACHINE FOR CYLINDER (BELT DRIVE VERSION)
07.44(01) CROP PRO PLUS TM, HYDRAULICS ON BASE MACHINE (BELT DRIVE VERSION)
07.51(01) TUBE CLAMPS AND HYDRAULIC TUBES
08.000(01) SECTION LIST 8
08.01(01) BATTERY BOX
08.02(01) OPERATOR'S PLATFORM, RH
08.03(01) MIRRORS AND HAND-RAIL, RH
08.04(01) OPERATOR'S PLATFORM, LH
08.05(01) MIRRORS AND HAND-RAIL, LH
08.06(01) LADDER
08.07(01) SHIELDS
08.08(01) SHIELDS, RH
08.09(01) SHIELDS, LH
08.10(01) SHIELDS, ENGINE
08.11(01) REAR SHIELDS
08.12(01) ROTARY SCREEN, SHIELDS, LH
08.13(01) ROTARY SCREEN, SHIELDS, RH
08.14(01) ROTARY SCREEN, SHIELDS, LH
08.15(01) ROTARY SCREEN, SHIELDS, RH
08.16(01) ROTARY SCREEN DRIVE
08.17(01) CLEANING BRUSH
08.51(01) DECALS - FOR NA ONLY
08.52(01) DECALS - FOR NA ONLY
08.53(01) DECALS - FOR NA ONLY
08.54(01) DECALS
08.55(01) DECALS
08.56(01) DECALS
08.57(01) DECALS

Kormo.by

08.58(01) DECALS
09.000(01) SECTION LIST 9
09.01(01) AUTOMATIC LUBRICATION, TWIN-PUMP
09.02(01) AUTOMATIC LUBRICATION, MANIFOLDS AND REDUCERS
09.03(01) AUTOMATIC LUBRICATION, BASIC
09.04(01) AUTOMATIC LUBRICATION, TWO WHEEL DRIVE
09.05(01) AUTOMATIC LUBRICATION: TUBES
09.06(01) AUTOMATIC AND CENTRAL LUBRICATION SYSTEM, CHOPPERBODY
09.07(01) CENTRAL LUBRICATION, CHOPPERBODY
09.08(01) AUTOMATIC LUBRICATION, CHOPPERBODY
09.09(01) AUTOMATIC LUBRICATION, FEEDROLLS
09.10(01) AUTOMATIC LUBRICATION, CROP PROCESSOR
09.10(02) AUTOMATIC LUBRICATION, CROP PROCESSOR, DOUBLE BELT
09.11(01) AUTOMATIC LUBRICATION, CROP PRO PLUS TM
09.12(01) AUTOMATIC LUBRICATION, 300N6X
09.13(01) EXTENSION KIT FOR AUTOMATIC LUBRICATION, 6-ROW AND PICK-UP HEADERS
09.14(01) AUTOMATIC LUBRICATION, 346W-356W-366W
09.15(01) KIT, DIAGNOSIS AUTOMATIC LUBRICATION SYSTEM
09.16(01) AUTOMATIC LUBRICATION - INTERFACE
10.000(01) SECTION LIST 10
10.01(01) CAB
10.02(01) CAB FLOOR
10.03(01) CAB WINDOW PANES
10.04(01) SCREEN WASHER FOR FRONT WINDOW
10.05(01) CAB ROOF
10.06(01) WINDSCREEN WIPER, FRONT
10.07(01) WINDSCREEN WIPER, REAR
10.08(01) WINDSCREEN WIPER, SIDE
10.09(01) DOOR LOCK
10.10(01) EMERGENCY DOOR LOCK
10.11(01) UPHOLSTERY
10.12(01) PIVOTING STEERING COLUMN
10.13(01) PIVOTING STEERING COLUMN
10.14(01) PIVOTING STEERING COLUMN
10.15(01) PIVOTING STEERING COLUMN
10.16(01) PIVOTING STEERING COLUMN
10.17(01) AIR CONDITIONER
10.18(01) HEATING
10.19(01) AIR CONDITIONER
10.20(01) AIR CONDITIONER
10.21(01) AIR CONDITIONER
10.22A(01) AIR CONDITIONER - D306
10.23(01) ARMREST, RH
10.24(01) SEAT
10.25(01) SEAT
10.26(01) SEAT
10.27(01) SEAT
10.28(01) SEAT
10.29(01) AIR SUSPENDED SEAT
10.30(01) BUDDY SEAT
10.31(01) FILTER
10.32(01) CAB NOISE-INSULATION

ormo.by

11.000(01) SECTION LIST 11
11.01(01) TRACTION WHEELS
11.02(01) STEERING WHEELS
12.000(01) SECTION LIST 12
12.01(01) GRASS FRAME
12.02(01) MAIN FRAME
12.03(01) MAIN FRAME
12.04(01) MAIN FRAME
13.000(01) SECTION LIST 13
13.000(02) SECTION LIST 13
13.000(03) SECTION LIST 13
13.000(04) SECTION LIST 13
13.01(01) MAIN DRIVE
13.02(01) MAIN DRIVE
13.03(01) MAIN DRIVE
13.04(01) MAIN DRIVE
13.05(01) POWER TAKE-OFF
13.06(01) MAIN DRIVE, GEARBOX - C297
13.06A(01) MAIN DRIVE, GEARBOX - D298
13.07(01) MAIN DRIVE, GEARBOX - C297
13.07A(01) MAIN DRIVE, GEARBOX - D298
13.08(01) MAIN DRIVE, GEARBOX - C297
13.08A(01) MAIN DRIVE, GEARBOX - D298
13.09(01) CLUTCH - C297
13.09A(01) MAIN DRIVE, GEARBOX, CLUTCH - D298
13.10(01) MAIN DRIVE - BEARINGS SUPPORT
13.10A(01) MAIN DRIVE - BEARINGS SUPPORT
13.11(01) HIGH BLOWER SPEED, DRIVE
13.11A(01) HIGH BLOWER SPEED, DRIVE, 27T/33T - C269
13.11B(01) HIGH BLOWER SPEED, DRIVE, 28T/31T - D270
13.12(01) POWER TAKE-OFF
13.13(01) POWER TAKE-OFF
13.51(01) FRAME UPPER FEEDROLLS, LH
13.52(01) FRAME UPPER FEEDROLLS, RH
13.52A(01) POWER TAKE-OFF - UPPER FEEDROLLS
13.53(01) UPPER FEEDROLLS, SPRING ASSEMBLY, FRONT
13.54(01) UPPER FEEDROLLS, SPRING ASSEMBLY, REAR
13.55(01) UPPER FEEDROLLS, LH
13.56(01) UPPER FEEDROLLS, RH
13.56A(01) UPPER FEEDROLLS, GEARBOX
13.57(01) CUTTERDRUM SHAFT, LH
13.58(01) CUTTERDRUM SHAFT, RH
13.59(01) CUTTERDRUM GEARBOX
13.59A(01) GEARBOX
13.59B(01) GEARBOX
13.60(01) CUTTERHEAD, KNIVES AND CORN CRACKER
13.61(01) SHEARBAR ADJUSTMENT
13.62(01) SHEARBAR ADJUSTMENT
13.63(01) SHEARBAR
13.64(01) SHEARBAR ADJUSTMENT
13.65(01) LOWER FEEDROLLS WITH METAL DETECTOR, LH
13.65A(01) GEARBOX - HEADER - C269

kormo.by

13.65B(01) GEARBOX - HEADER - D270
13.66(01) LOWER FEEDROLLS WITH METAL DETECTOR, RH
13.66A(01) GEARBOX "HYDROLOC", LH - C269
13.66B(01) GEARBOX "HYDROLOC", RH - C269
13.66C(01) GEARBOX "HYDROLOC", LH - D270
13.66D(01) GEARBOX "HYDROLOC", RH - D270
13.66E(01) LOWER FEEDROLLS, ADDITIONAL BEARINGS
13.67(01) LOWER FEEDROLLS WITH METAL DETECTOR
13.68(01) METAL DETECTOR ASSEMBLY
13.69(01) KNIFE SHARPENER
13.70(01) KNIFE SHARPENER
13.71(01) KNIFE SHARPENER
13.72(01) CUTTERHEAD FRAME
13.73(01) KNIFE SHARPENER, SHIELDS
13.74(01) CUTTERHEAD SHIELDS, LH
13.75(01) CUTTERHEAD SHIELDS, RH
13.76(01) CUTTERHEAD ACCESSORIES
13.77(01) GRASS PLATE
13.78(01) GRAIN SAVER PAN
13.79(01) RECUTTER SCREEN
13.80(01) KNIFE PLATE
14.000(01) SECTION LIST 14
14.01(01) DRIVE
14.02(01) DRIVE
14.03(01) CLUTCH
14.04(01) DRIVE
14.05(01) CROP PROCESSOR, ROLLS, 77 AND 99 SERRATIONS - C357
14.05A(01) CROP PROCESSOR, ROLLS, 132 SERRATIONS - C357
14.05B(01) CROP PROCESSOR, ROLLS, 77/99/132 SERRATIONS - D358
14.06(01) DRIVE, RH
14.07(01) ROLL ADJUSTMENT
14.08(01) ROLL ADJUSTMENT
14.09(01) ROLL ADJUSTMENT
14.10(01) ELECTRICAL CONTROL
14.11(01) ELECTRICAL CONTROL
14.12(01) FRAME AND GUARDS
14.13(01) GUIDES
14.14(01) GUARDS
14.21(01) RH CROP PROCESSOR DOUBLE DRIVE, SHIELDING AND BELT TENSION, ASSEMBLY
14.22(01) RH CROP PROCESSOR DOUBLE DRIVE, PULLEY'S AND AXLES
14.51(01) CROP PRO PLUS TM , HYDRO-DRIVE
14.52(01) CROP PRO PLUS TM, HYDRO-DRIVE, CLUTCH
14.53(01) CROP PRO PLUS TM, HYDRO-DRIVE, ROLLS - LH
14.54(01) CROP PRO PLUS TM, HYDRO-DRIVE, TENSION ROLL - LH - C322
14.54A(01) CROP PRO PLUS TM, HYDRO-DRIVE, TENSION ROLL - LH - D323
14.55(01) CROP PRO PLUS TM, HYDRO-DRIVE, ROLLS - 99T - C357
14.55A(01) CROP PRO PLUS TM, HYDRO-DRIVE, ROLLS - 77T - C357
14.55B(01) CROP PRO PLUS TM, HYDRO-DRIVE, ROLLS - 132T
14.55C(01) CROP PRO PLUS TM, HYDRO-DRIVE, ROLLS - 77T/99T - D358
14.56(01) CROP PRO PLUS TM, HYDRO-DRIVE, ROLLS - RH
14.57(01) CROP PRO PLUS TM, HYDRO-DRIVE, ROLL ADJUSTMENT - UPPER
14.58(01) CROP PRO PLUS TM, HYDRO-DRIVE, ROLL ADJUSTMENT - LOWER

PRT.KORMO.BY
Kormo.by

14.59(01) CROP PRO PLUS TM, HYDRO-DRIVE, ELECTRICAL CONTROL
14.60(01) CROP PRO PLUS TM, HYDRO-DRIVE, ELECTRICAL CONTROL ENGINE
14.61(01) CROP PRO PLUS TM, HYDRO-DRIVE, SWITCH OVER SYSTEM MAIZE/GRASS
14.62(01) CROP PRO PLUS TM, HYDRO-DRIVE, FRAME AND GUARDS
14.63(01) CROP PRO PLUS TM, HYDRO-DRIVE, GUIDES
14.69(01) CPP - WELD COMPONENTS TO ALLOW CUTTERHEAD LIFT CYLINDER TO BE MOVED - C322
14.70(01) CPP - REBUILD KIT FOR CUTTERHEAD TO CPP TOP ROLL DRIVE - 3HA TO 6HA
14.71(01) CROP PRO PLUS TM, BELT DRIVE, BELT AND PULLEY'S - LH
14.72(01) CROP PRO PLUS TM, BELT DRIVE, CLUTCH
14.73(01) CROP PRO PLUS TM, BELT DRIVE, ROLLS - LH
14.74(01) CROP PRO PLUS TM, BELT DRIVE, TENSION ROLL - LH
14.75(01) CROP PRO PLUS TM, BELT DRIVE, ROLLS - 99T - C357
14.75A(01) CROP PRO PLUS TM, BELT DRIVE, ROLLS - 77T - C357
14.75B(01) CROP PRO PLUS TM, BELT DRIVE, ROLLS - 132T - C357
14.75C(01) CROP PRO PLUS TM, BELT DRIVE, ROLLS - 77T/99T/132T - D358
14.76(01) CROP PRO PLUS TM, BELT DRIVE, ROLLS - RH
14.77(01) CROP PRO PLUS TM, BELT DRIVE, ROLL ADJUSTMENT - UPPER
14.78(01) CROP PRO PLUS TM, BELT DRIVE, ROLL ADJUSTMENT - LOWER
14.79(01) CROP PRO PLUS TM, BELT DRIVE, ELECTRICAL CONTROL
14.80(001) CROP PRO PLUS TM, BELT DRIVE, ELECTRICAL CONTROL ENGINE
14.81(01) CROP PRO PLUS TM, BELT DRIVE, MAIZE/GRASS
14.82(01) CROP PRO PLUS TM, BELT DRIVE, FRAME AND GUARDS
14.83(01) CROP PRO PLUS TM, BELT DRIVE, GUIDES
14.84(01) CROP PRO PLUS TM, BELT DRIVE, TRANSMISSION RH
15.000(01) SECTION LIST 15
15.01(01) BLOWER
15.02(01) BLOWER
15.03(01) BLOWER
15.04(01) BLOWER, GEARBOX
15.05(01) BLOWER, GEARBOX
16.000(01) SECTION LIST 16
16.01(01) SPOUT
16.02(01) SPOUT, LUBRICATION
16.03(01) SPOUT
16.04(01) SPOUT
16.05(01) SPOUT
16.06(01) SPOUT
16.07(01) SPOUT EXTENSION
18.000(01) SECTION LIST 18
18.01(01) HAZARD WARNING PLATES
18.02(01) FIRE EXTINGUISHER
18.03(01) CHOCK
18.04(01) COUNTERWEIGHTS
18.05(01) COUNTERWEIGHTS
18.06(01) HITCH
18.07(01) FRAME CHOPPER BODY FOR CAT II, 3 POINT LINKAGES
18.07A(01) FRAME CHOPPER BODY FOR CAT II AND III, 3 POINT LINKAGES
18.08(01) WORKSHOP STAND CHOPPER BODY
18.09(01) HYDRAULIC JACK ASSEMBLY
18.10(01) SPECIAL TOOLS
18.11(01) 30 KM/H KIT - 2-WHEEL DRIVE
18.11A(01) 30 KM/H KIT - 4-WHEEL DRIVE

SHOP.KORMO.BY
Kormo.by

18.12(01) HYDRO-ENGINE LIFTING CHAIN
18.13(01) SUPPORT CROP PROCESSOR
18.14(01) SENSOR KIT DIRECT CUT HEADER
19.000(01) SECTION LIST 19
20.000(01) SECTION LIST 20

www.kormo.by

0.0016(01) MAIN SECTIONS

MAIN SECTIONS	**SECTIONS PRINCIPALES**	**SECCIONES PRINCIPALES**	**HOVEDAFSNIT**
SEZIONI PRINCIPALI	**HAUPTABSCHNITTE**	**SECÇÕES PRINCIPAIS**	**HOOFDSECTIES**

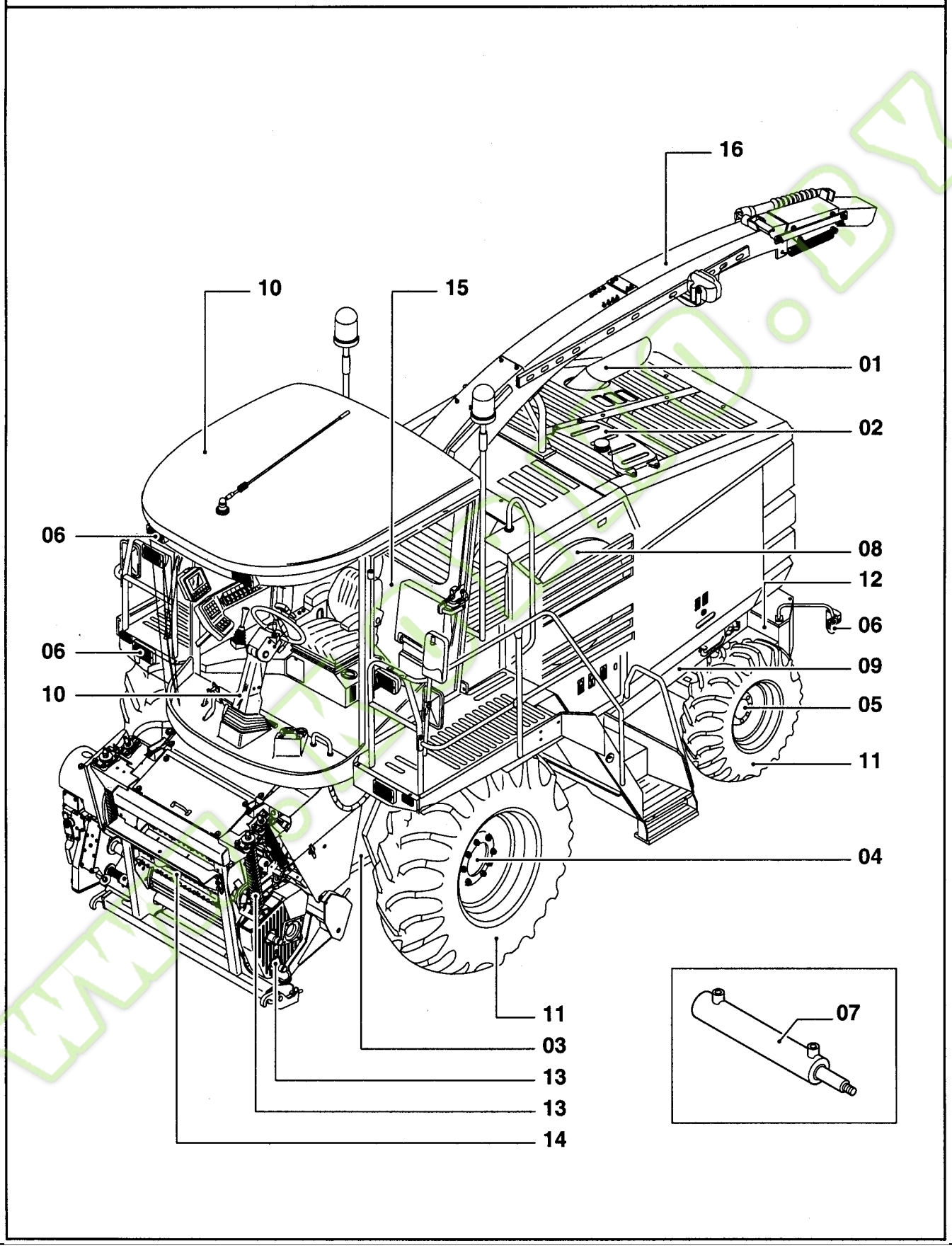

FX50 SELF-PROPELLED FORAGE HARVESTER (10/02-)

0.0016(01) MAIN SECTIONS

Ref	Part Number	Qty	Description

www.KORMO.BY

ENGINE	**MOTEUR**	**MOTOR**	**MOTOR**
MOTORE	**MOTOR**	**MOTOR**	**MOTOR**

SEC. 1

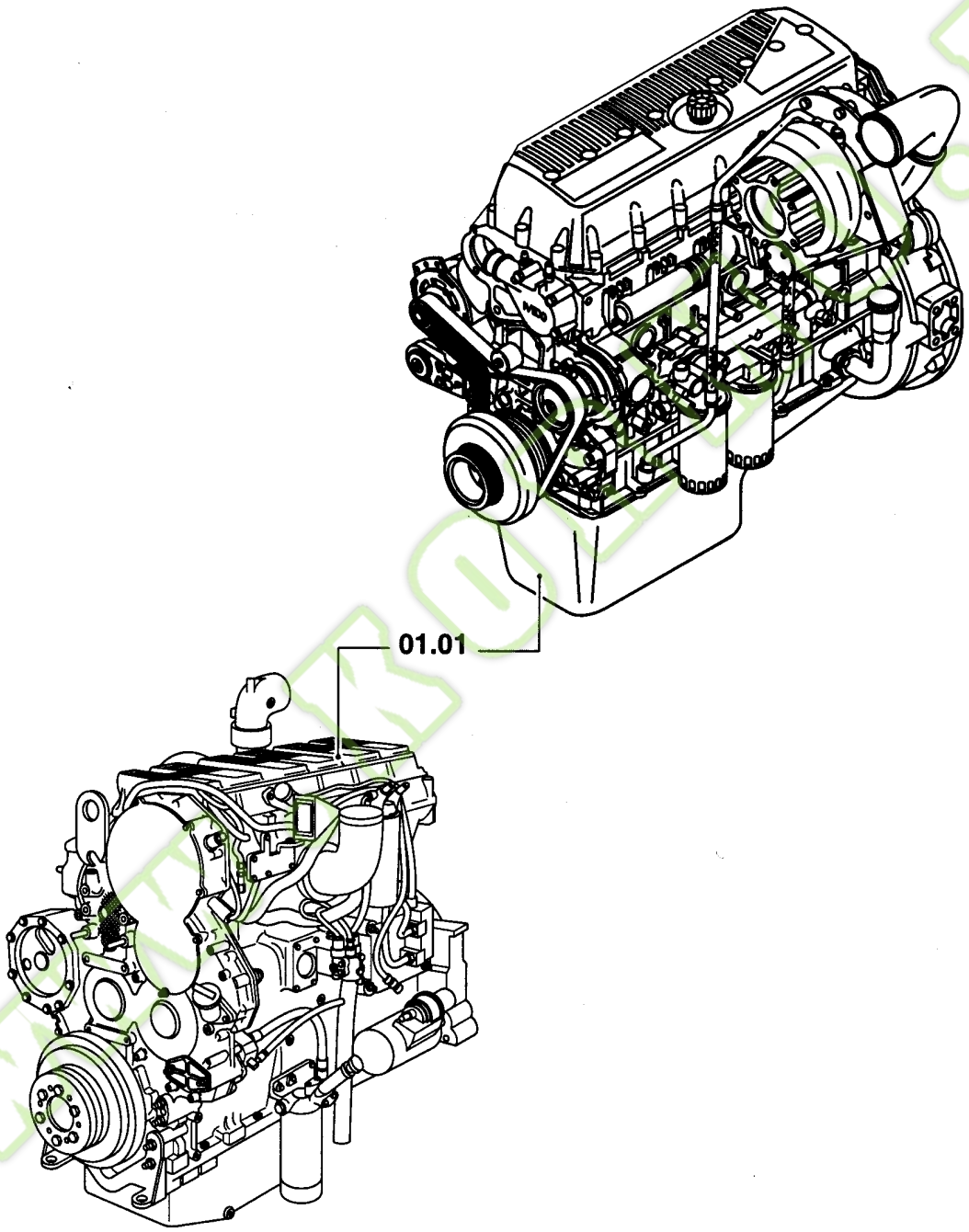

0.0017(01) SECTION LIST 1

Ref	Part Number	Qty	Description

WWW.KOBMO.BY

ENGINE EQUIPMENT | **EQUIPEMENT MOTEUR** | **EQUIPO MOTOR** | **MOTORUDSTYR**

EQUIPAGGIAMENTO MOTORE | **MOTORAUSRÜSTUNG** | **EQUIPAMENTO DO MOTOR** | **MOTORUITRUSTING**

SEC. 2

FX30-40-50 IVECO

02.03 → 02.10
02.14

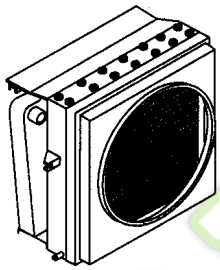

02.01

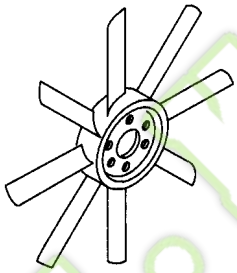

02.02

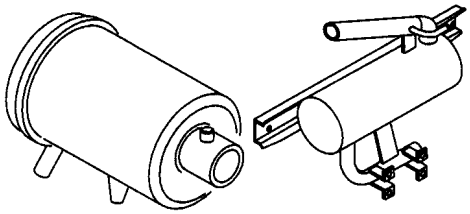

02.11 - 02.12 - 02.13

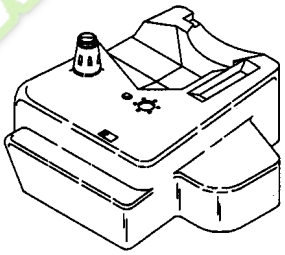

02.15 - 02.16

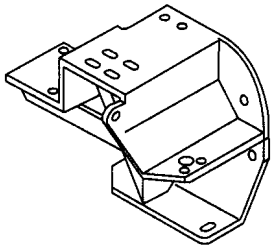

www.KORMO.BY

0.0018(01) SECTION LIST 2

Ref	Part Number	Qty	Description

WWW.KORMO.BY

ENGINE EQUIPMENT **EQUIPEMENT MOTEUR** **EQUIPO MOTOR** **MOTORUDSTYR**

EQUIPAGGIAMENTO MOTORE **MOTORAUSRÜSTUNG** **EQUIPAMENTO DO MOTOR** **MOTORUITRUSTING**

SEC. 2

FX60 CATERPILLAR

02.67 - 02.68

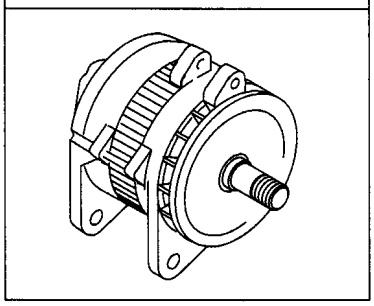

02.51

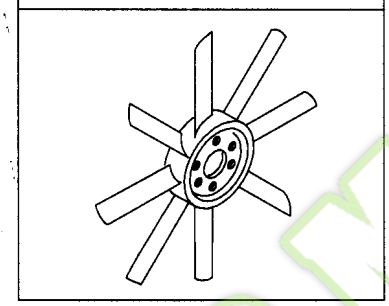

02.55 → 02.61
02.69

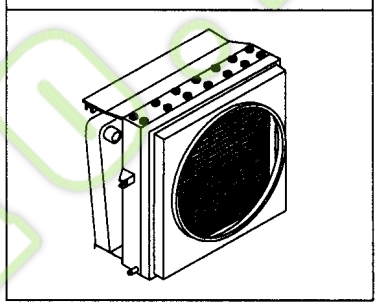

02.54

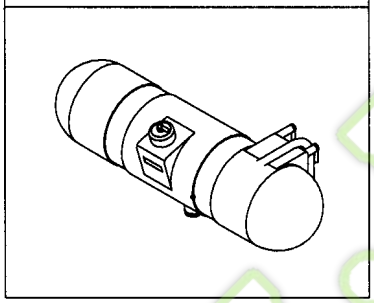

02.65 - 02.66

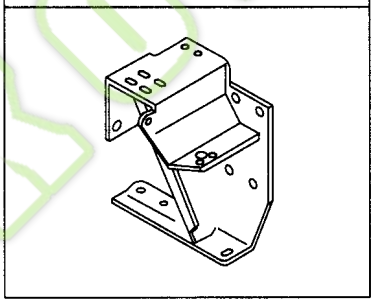

02.59

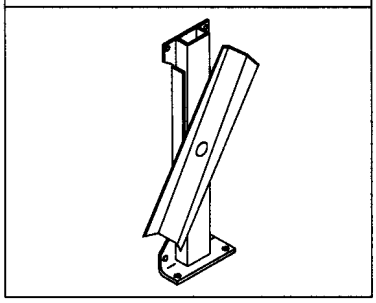

02.53

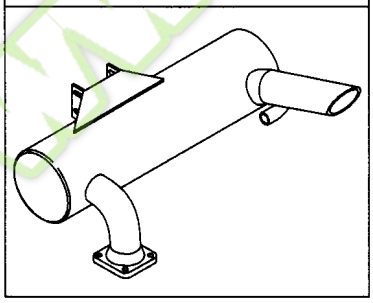

02.52

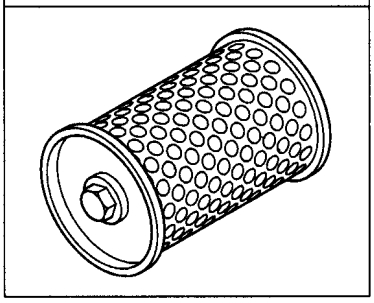

02.62 - 02.63 - 02.64

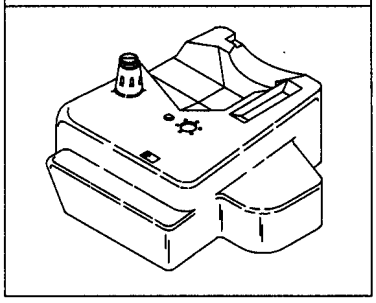

WWW.KOBMOBY

0.0018A(01) SECTION LIST 2

Ref	Part Number	Qty	Description

WWW.KOBMO.BY

TRANSMISSION	**TRANSMISSION**	**TRANSMISION**	**TRANSMISSION**
TRANSMISSION	**TRANSMISSION**	**TRANSMISSÃO**	**TRANSMISSIE**

SEC. 3

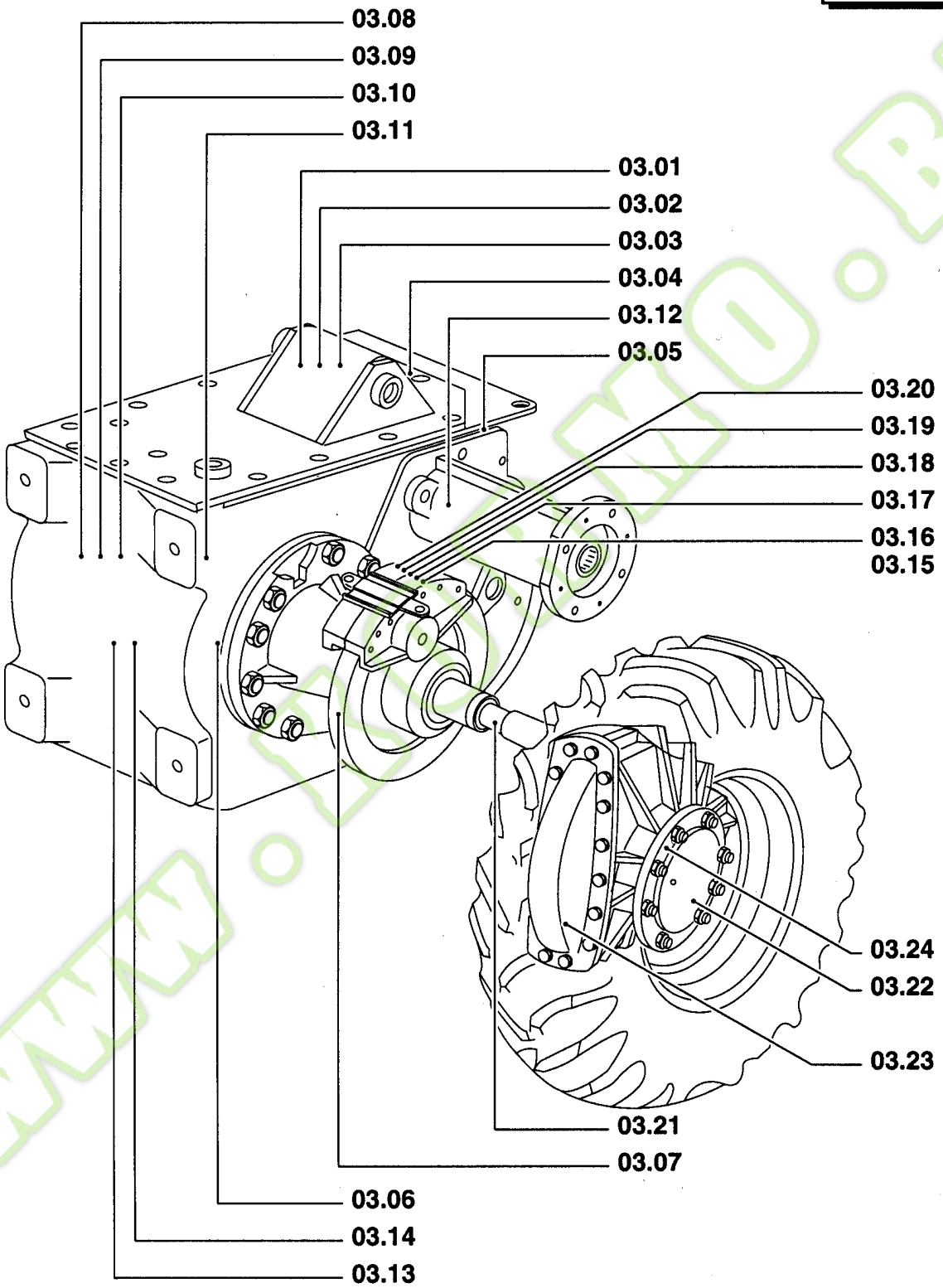

www.EDMO.BY

0.0019(01) SECTION LIST 3

Ref	Part Number	Qty	Description

www.KOBMO.BY

FRONT AXLE	ESSIEU AVANT	EJE DELANTERO	FORAKSEL
ASSALE ANTERIORE	VORDERACHSE	EIXO DIANTIERO	VOORAS

SEC. 4

NOT APPLICABLE FOR THIS CATALOGUE
NON APPLICABILE PER QUESTO CATALOGO
PAS APPLICABLE POUR CE CATALOGUE
NICHT ANWENDBAR FÜR DIESEN KATALOG
NO APLICABLE PARA ESTE CATÁLOGO
NÃO APPLICABLE PARA NESTE CATÁLOGO
IKKE APLIKABEL FOR DENNE KATALOG
NIET VAN TOEPASSING VOOR DEZE CATALOGUS

www.kemo.by

0.0020(01) SECTION LIST 4

Ref	Part Number	Qty	Description

www.KOBMO.BY

REAR AXLE	**ESSIEU POSTÉRIEUR**	**EJE POSTERIOR**	**MANCANTE**
ASSALE POSTERIORE	**HINTERACHSE**	**PONTE TRASEIRO**	**ACHTERAS**

SEC. 5

2 WD, FIXED
05.01 - 05.02

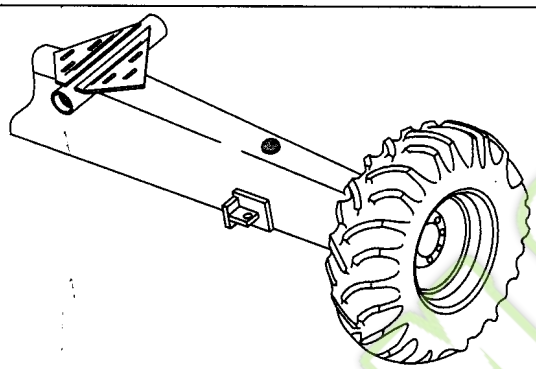

4 WD
05.03 → 05.13

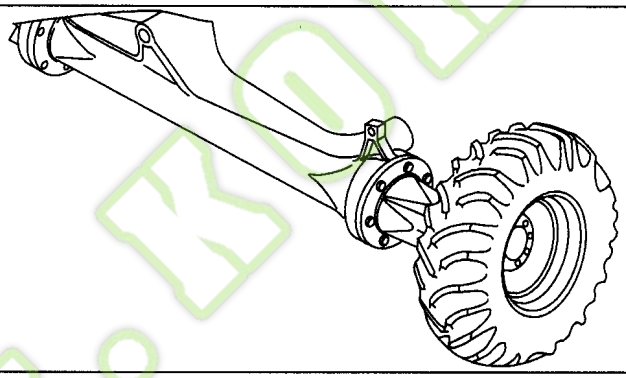

2 WD, ADJUSTABLE
05.14 - 05.15 - 05.16

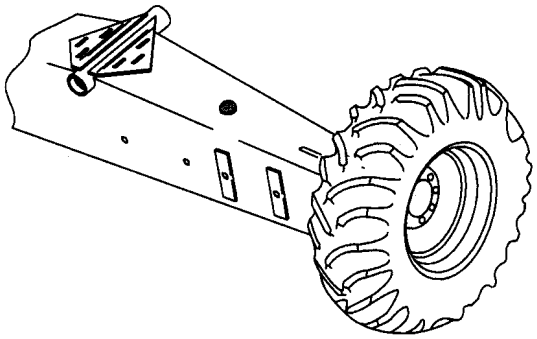

www.KOBMO.BY

0.0021(01) SECTION LIST 5

Ref	Part Number	Qty	Description

WWW.KORMO.BY

ELECTRICAL SYSTEM	**SYSTÈME ELECTRIQUE**	**SISTEMA ELÉCTRICO**	**ELECTRISK SYSTEM**
SISTEMA DI ELETTRICO	**ELEKTRISCHES SYSTEME**	**SISTEMA ELÉCTRICA**	**ELEKTRISCH SYSTEEM**

SEC. 6

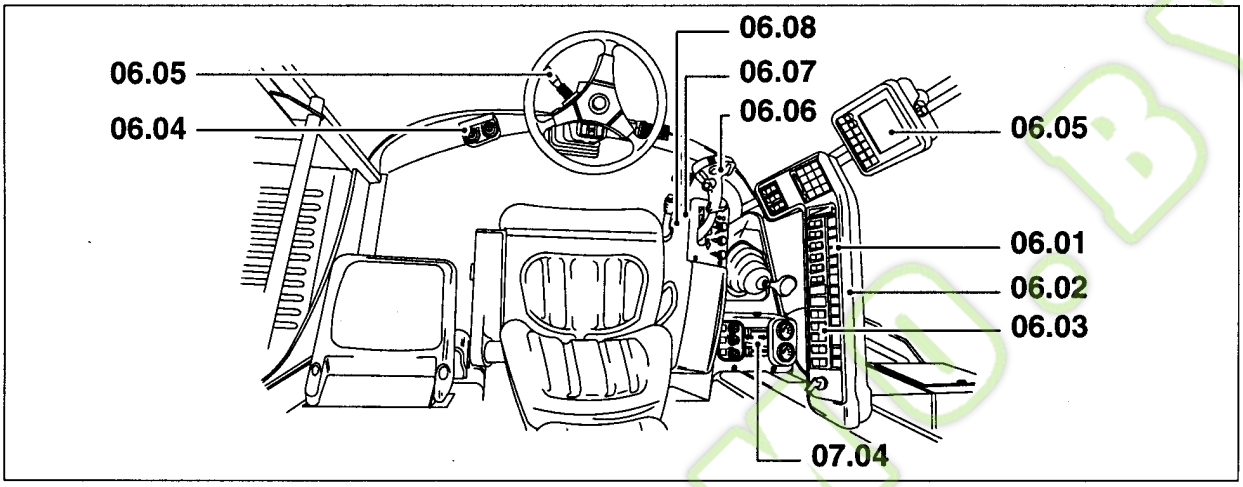

06.09 - 06.10 - 06.11 - 06.12 - 07.13
06.14 - 06.15 - 06.16 - 06.17 - 06.18
06.20 - 06.21 - 06.22

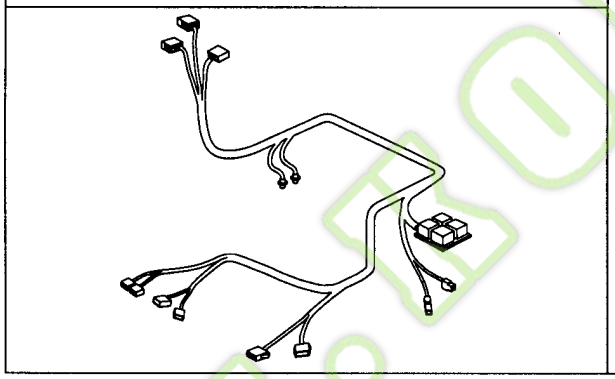

06.27 - 06.28 - 06.29
06.30 - 06.31 - 06.32

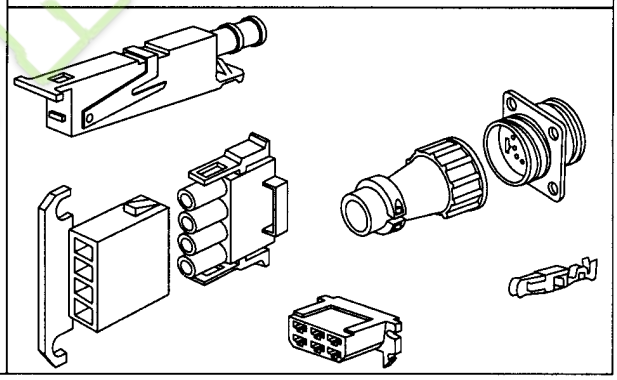

06.23

06.25
06.26

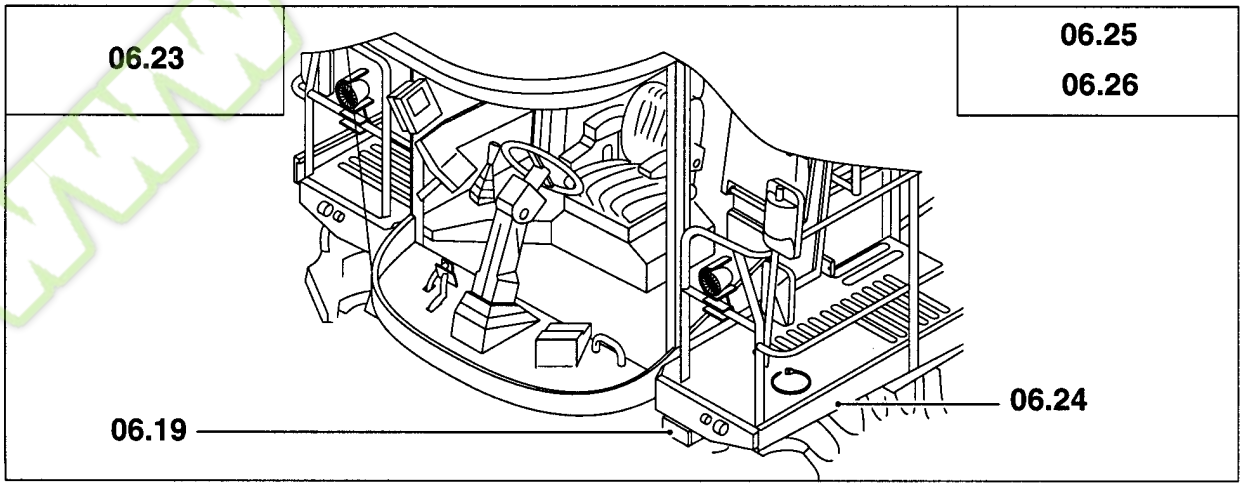

www.BOBCOB.BY

0.0022(01) SECTION LIST 6

Ref	Part Number	Qty	Description

WWW.KORMO.BY

HYDRAULIC SYSTEMS | **INSTALLATION HYDRAULIQUE** | **INSTALACIÓN HIDRÁULICA** | **HYDRAULIKANLÆG**

IMPIANTO IDRAULICA | **HYDRAULISCHE ANLAGE** | **INSTÁLAÇION HIDRÁULICA** | **HYDRAULISCH SYSTEEM**

SEC. 7

07.04 - 07.05 - 07.12 - 07.13 - 07.17 - 07.19 - 07.20
07.25 - 07.26 - 07.27 - 07.28 - 07.29 - 07.37

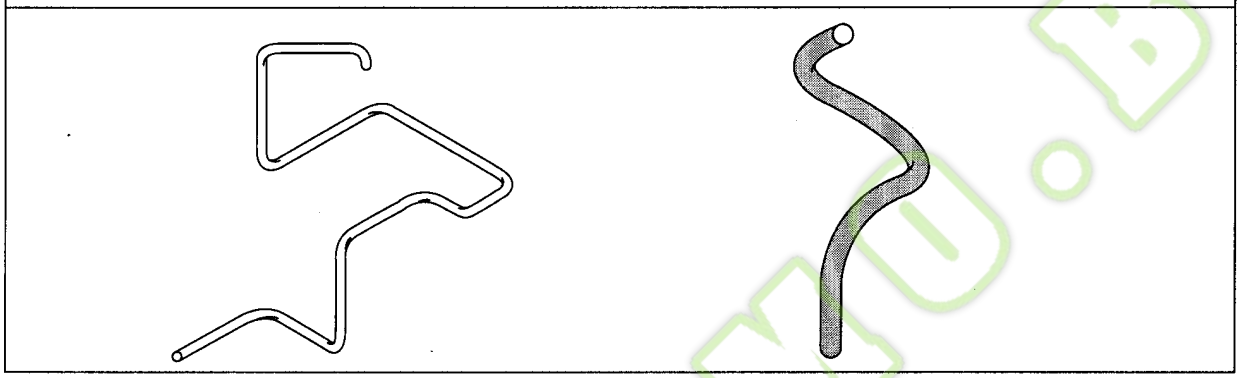

07.01 - 07.02 - 07.03

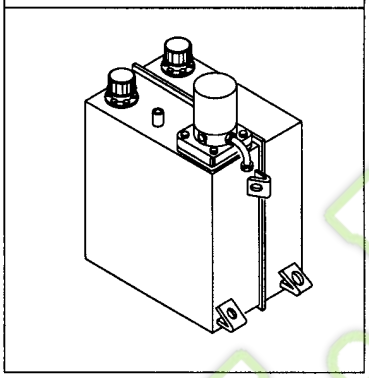

07.06

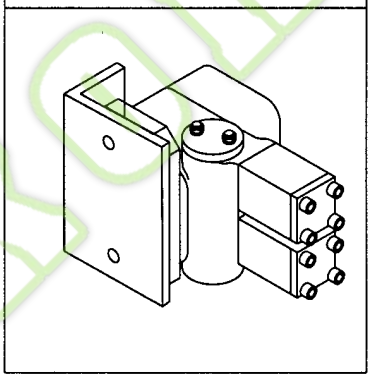

07.07

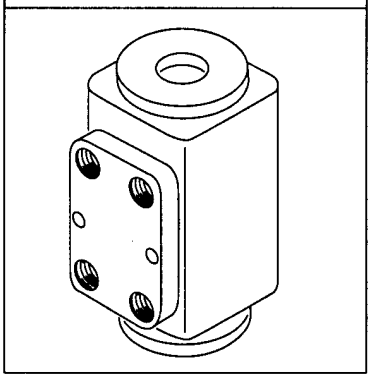

07.08

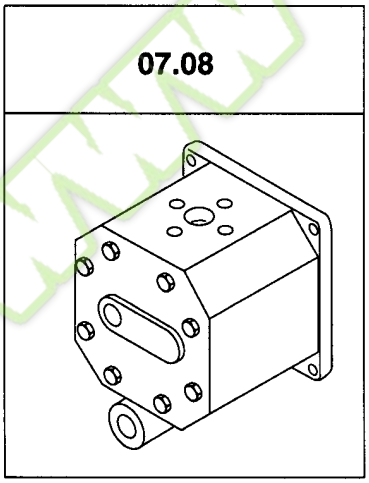

07.13

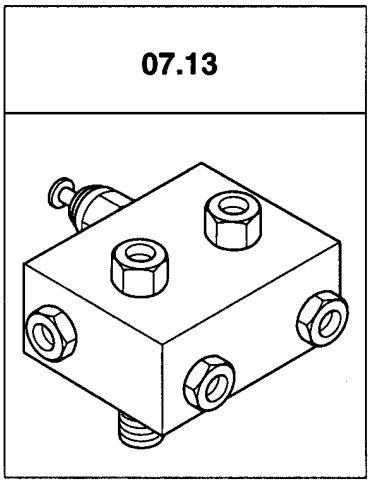

07.09 - 07.10 - 07.11
07.14 - 07.15

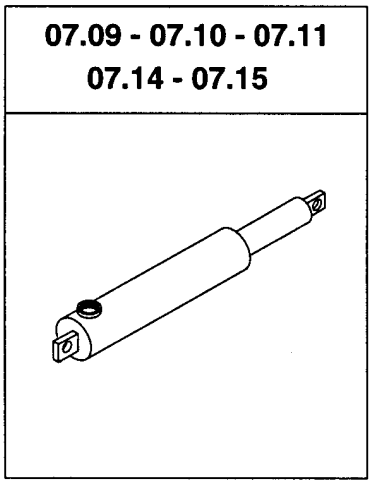

www.KOBMU.BY

0.0023(01) SECTION LIST 7

Ref	Part Number	Qty	Description

WWW.KORMO.BY

HYDRAULIC SYSTEMS **INSTALLATION HYDRAULIQUE** **INSTALACIÓN HIDRÁULICA** **HYDRAULIKANLÆG**

IMPIANTO IDRAULICA **HYDRAULISCHE ANLAGE** **INSTÁLAÇION HIDRÁULICA** **HYDRAULISCH SYSTEEM**

SEC. 7

07.16 - 07.17

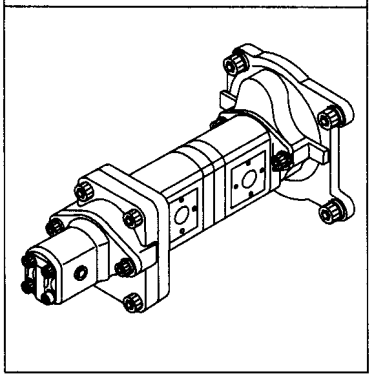

07.18

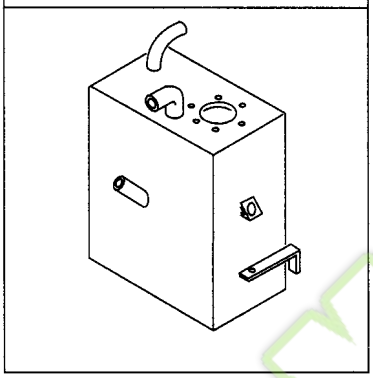

07.19 - 07.20

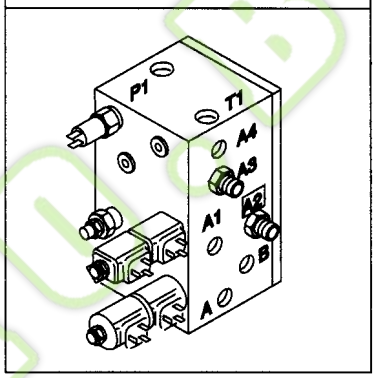

07.21 - 07.22 - 07.23

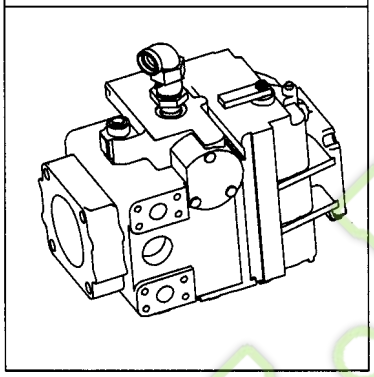

07.24 - 07.24A

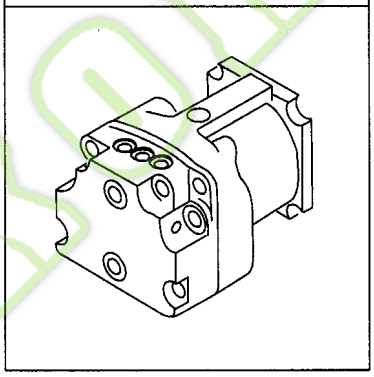

07.30

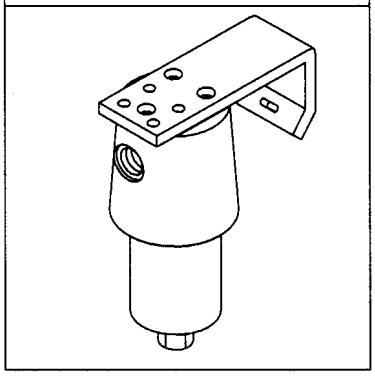

07.31

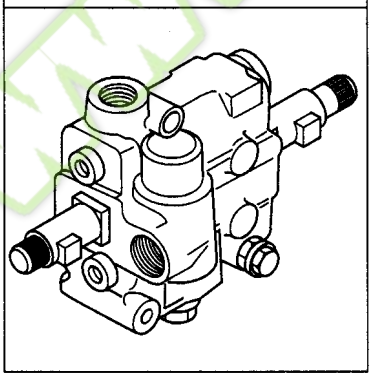

07.32 - 07.33 - 07.34

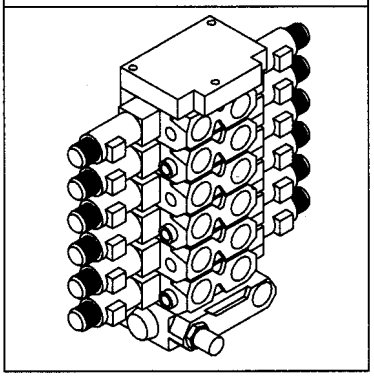

07.35

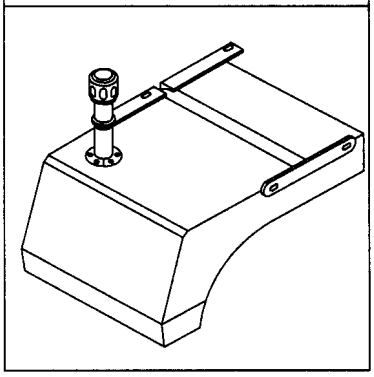

www.tormoby

0.0023A(01) SECTION LIST 7

Ref	Part Number	Qty	Description

www.KORMO.BY

HYDRAULIC SYSTEMS	INSTALLATION HYDRAULIQUE	INSTALACIÓN HIDRÁULICA	HYDRAULIKANLÆG
IMPIANTO IDRAULICA	HYDRAULISCHE ANLAGE	INSTÁLAÇION HIDRÁULICA	HYDRAULISCH SYSTEEM

SEC. 7

07.36 - 07.38 - 07.39

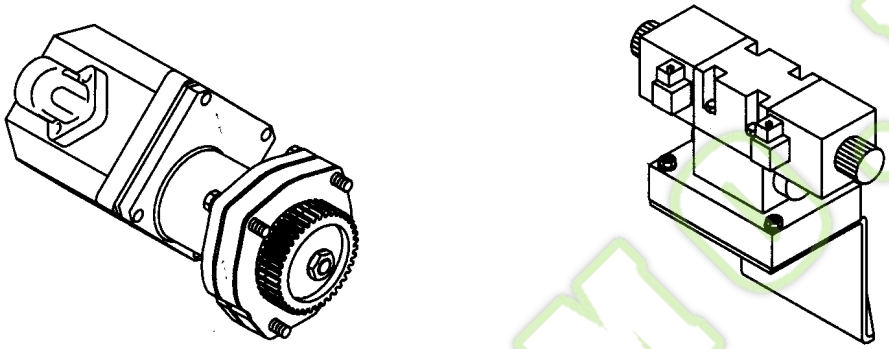

07.40 → 07.44

07.51

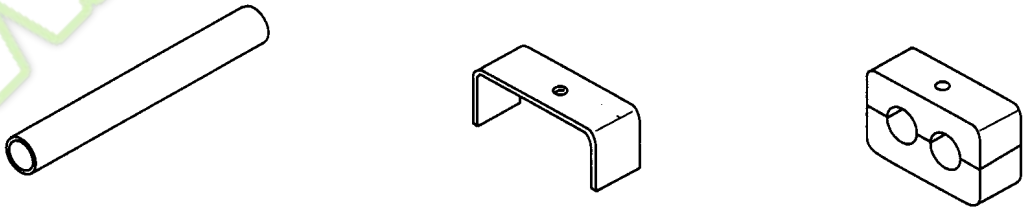

www.KOBMOBY

Ref	Part Number	Qty	Description

www.KOBMO.BY

SHEET METAL/DECALS	REVÊTEMENTS EN TÔLE DÉCALCOMANIE	CHAPEADOS/CALCOMANÍAS	METALPLADEBEKLÆDN. MÆRKATER
LAMIERATI DECALCOMANIE	BLECHVERKLEIDUNGEN ABZIEHBILDER	REVESTIMENTOS EM CHAPAS/DECALCOMANIAS	METALEN PLATEN PLAKPLAATJES

SEC. 8

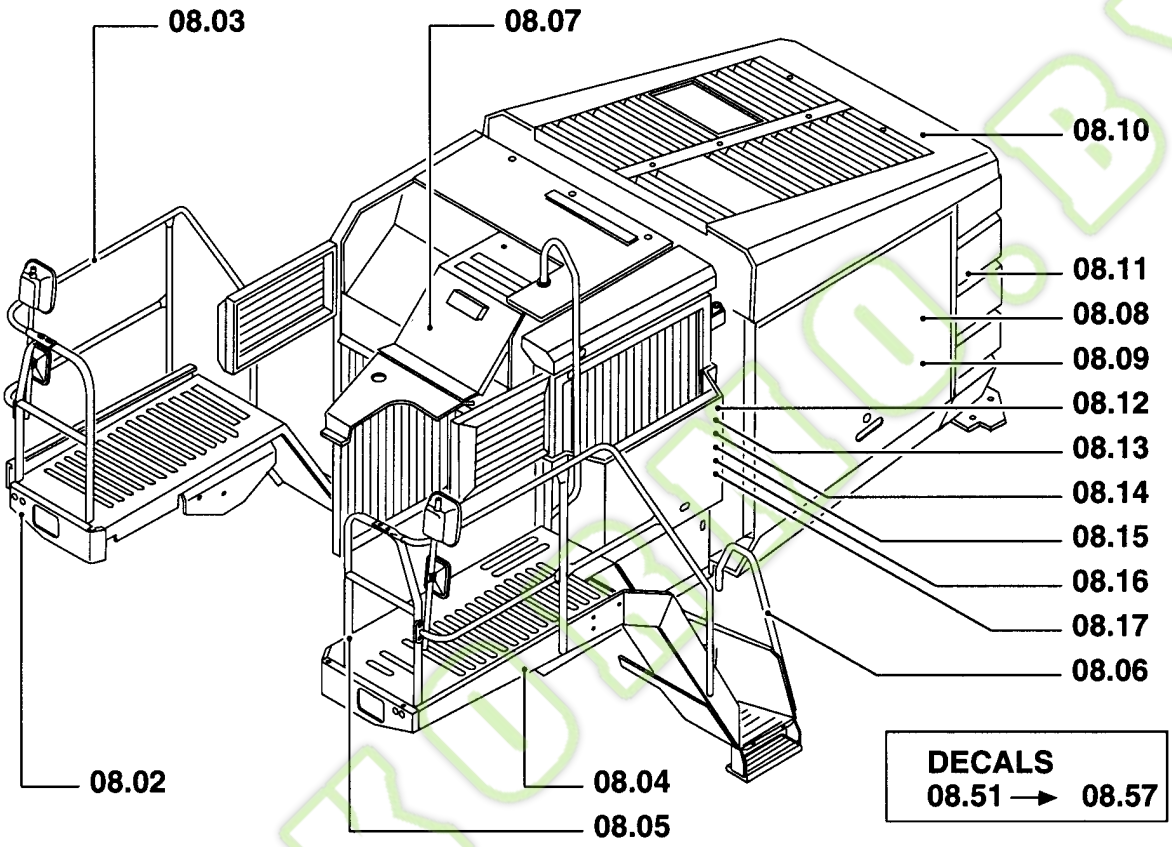

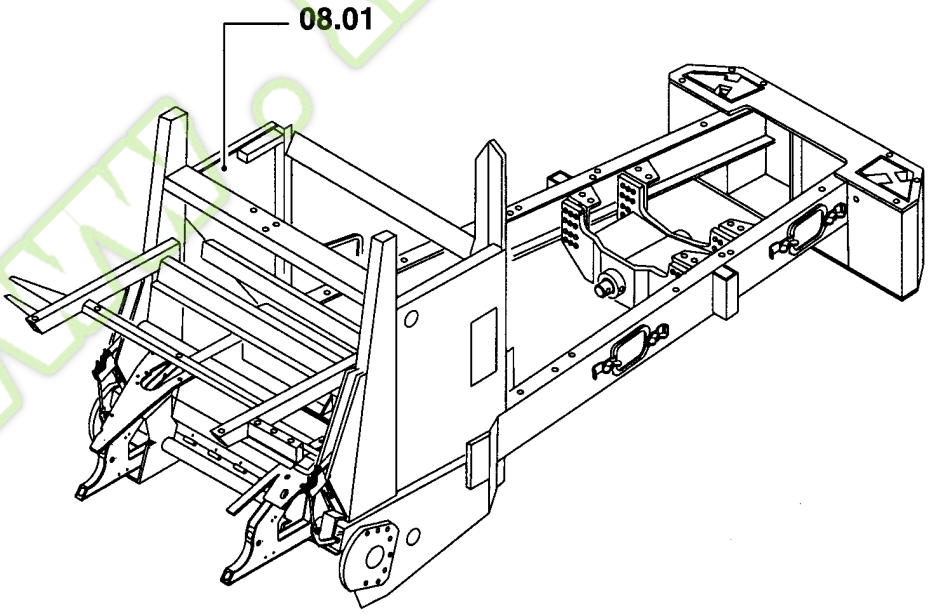

0.0024(01) SECTION LIST 8

Ref	Part Number	Qty	Description

WWW.KORMO.BY

LUBRICATION	**LUBRIFICATRICE**	**LUBRIFICAR**	**SMØRING**
LUBRIFICANTE	**SCHMIERING**	**LUBRIFICANTE**	**SMERING**

SEC. 9

09.01 - 09.15

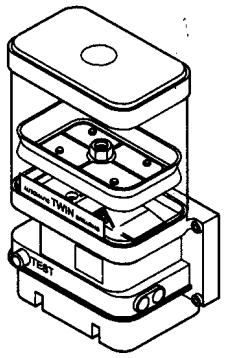

09.02 → 09.06

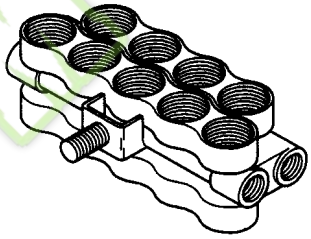

09.07 → 09.14

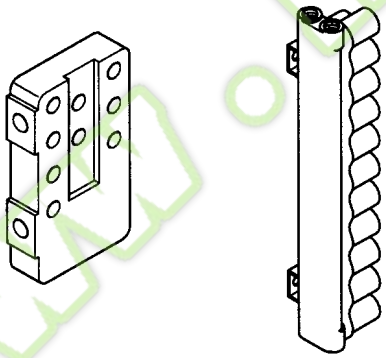

09.15

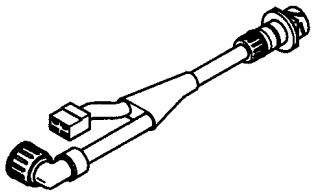

09.16

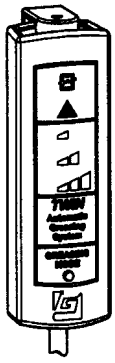

WWW.KOBMO.BY

0.0025(01) SECTION LIST 9

Ref	Part Number	Qty	Description

WWW.KORMO.BY

CAB	CABINE	CABINA	CAB
CABINA	KABINE	CABINA	CABINE

SEC. 10

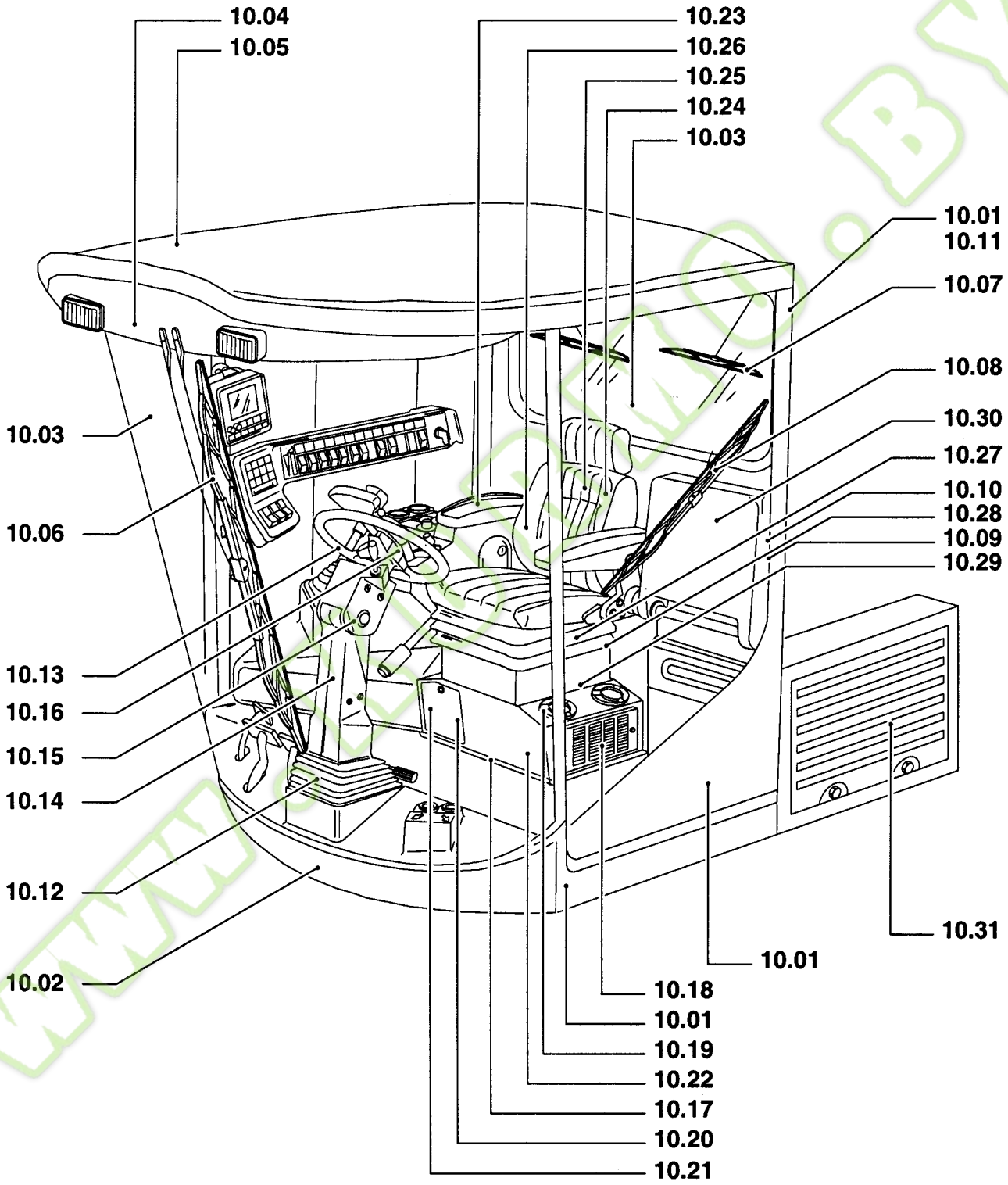

Ref	Part Number	Qty	Description

www.KORMO.BY

WHEELS	**ROUES**	**RUEDAS**	**HJUL**
RUOTI	**RÄDER**	**RODAS**	**WIELEN**

SEC. 11

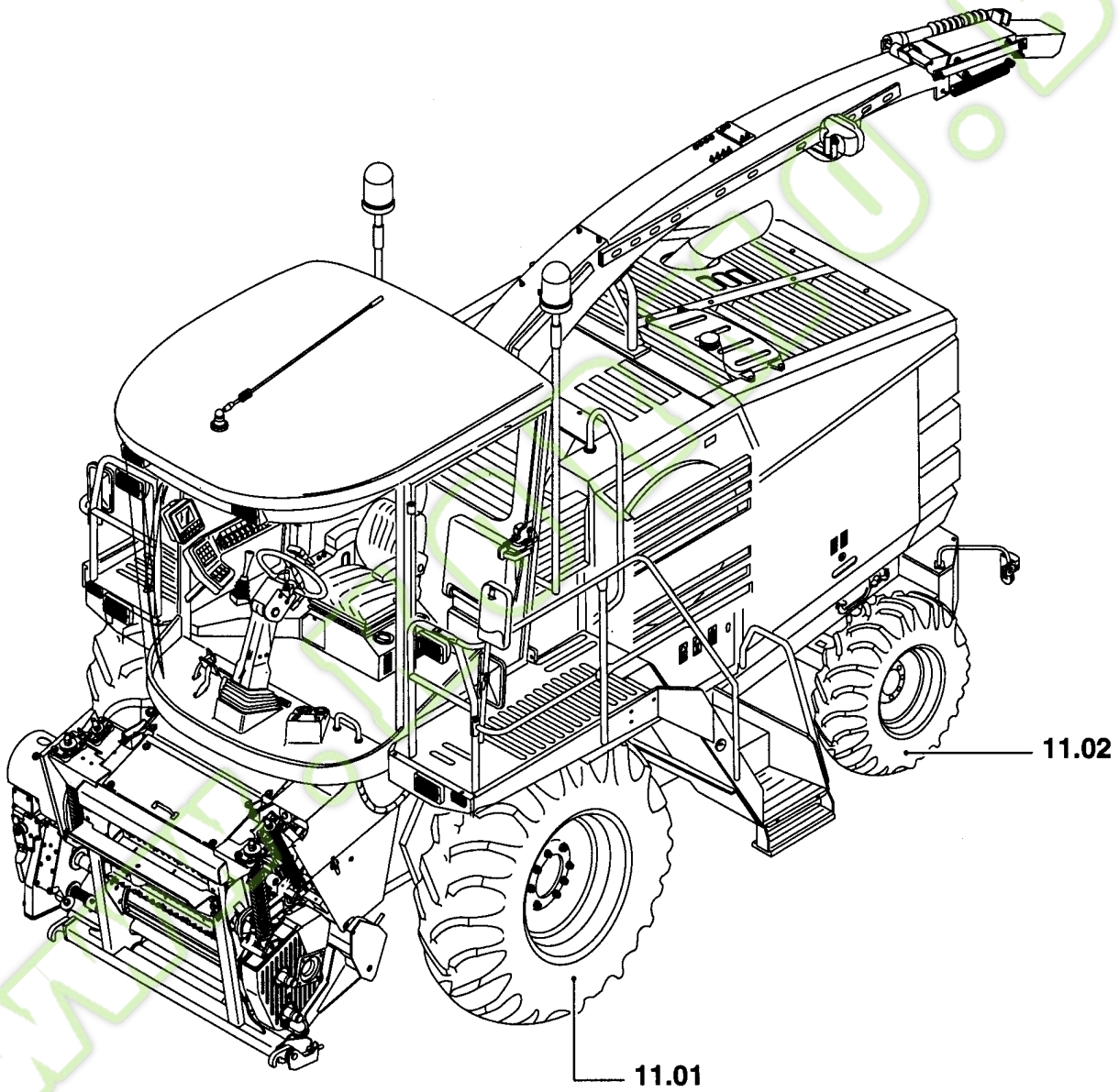

Ref	Part Number	Qty	Description

www.KORMO.BY

MAIN FRAME	**CHÂSSIS PRINCIPAL**	**BASTIDOR PRINCIPAL**	**HOVEDRAMME**
TELAIO PRINCIPALE	**HAUPTGESTELL**	**ESTRUTURA PRINCIPAL**	**HOOFDRAAM**

SEC. 12

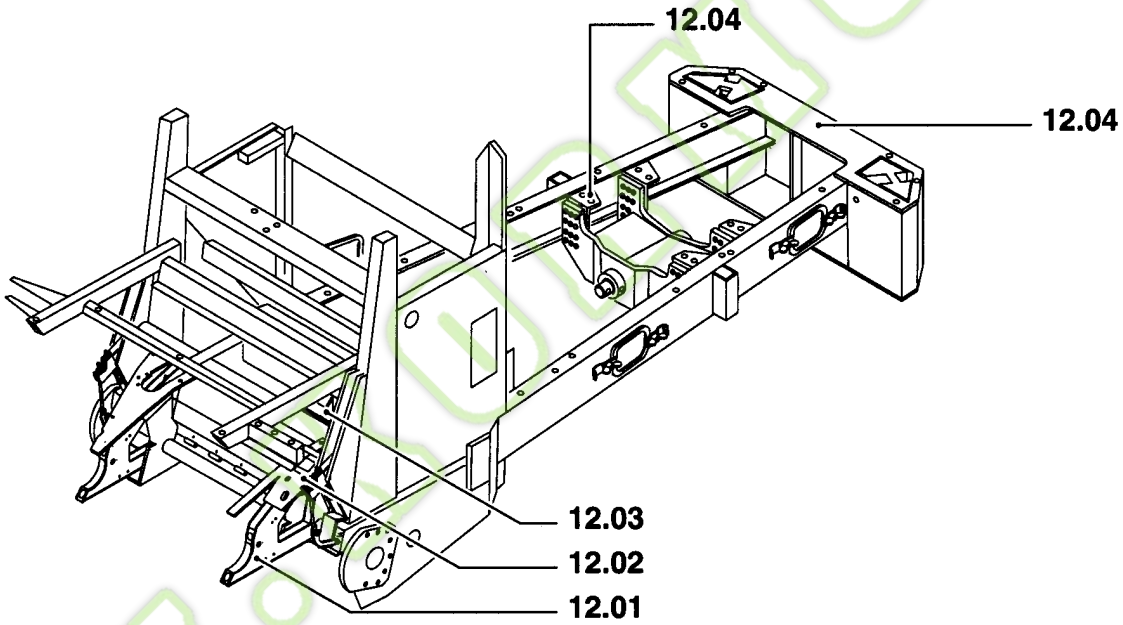

www.auto.by

Ref	Part Number	Qty	Description

www.KOBMO.BY

CHOPPER BODY	**DISPOSITIF DE COUPE**	**MECANISMO DE CORTE**	**KNIVBOM**
DISPOSITIVO DI TAGLIO	**SCHNEIDWERK**	**DISPOSITIVO DE CORTE**	**MESSENTROMMEL**

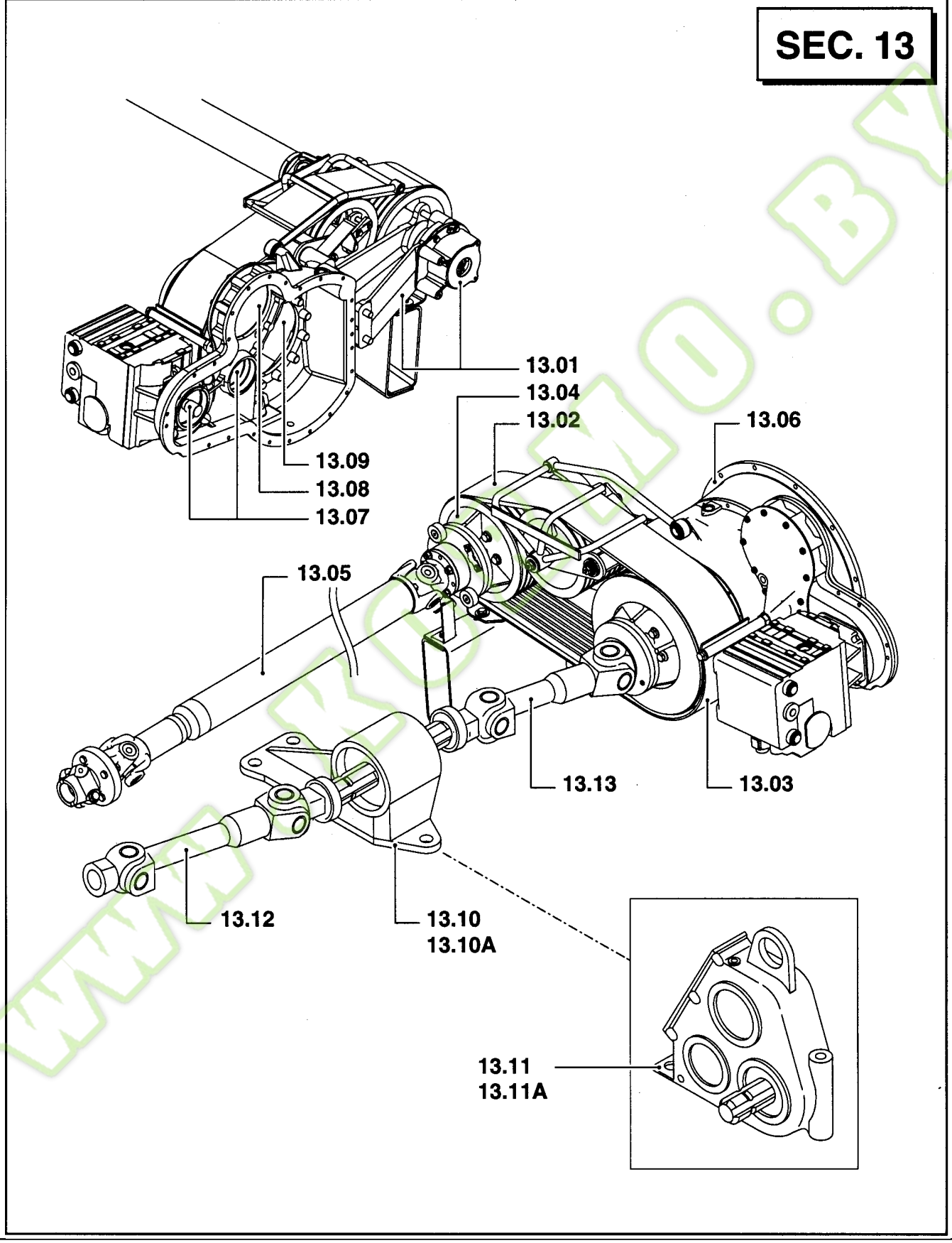

Ref	Part Number	Qty	Description

www.KOBMO.BY

CHOPPER BODY	**DISPOSITIF DE COUPE**	**MECANISMO DE CORTE**	**KNIVBOM**
DISPOSITIVO DI TAGLIO	**SCHNEIDWERK**	**DISPOSITIVO DE CORTE**	**MESSENTROMMEL**

SEC. 13

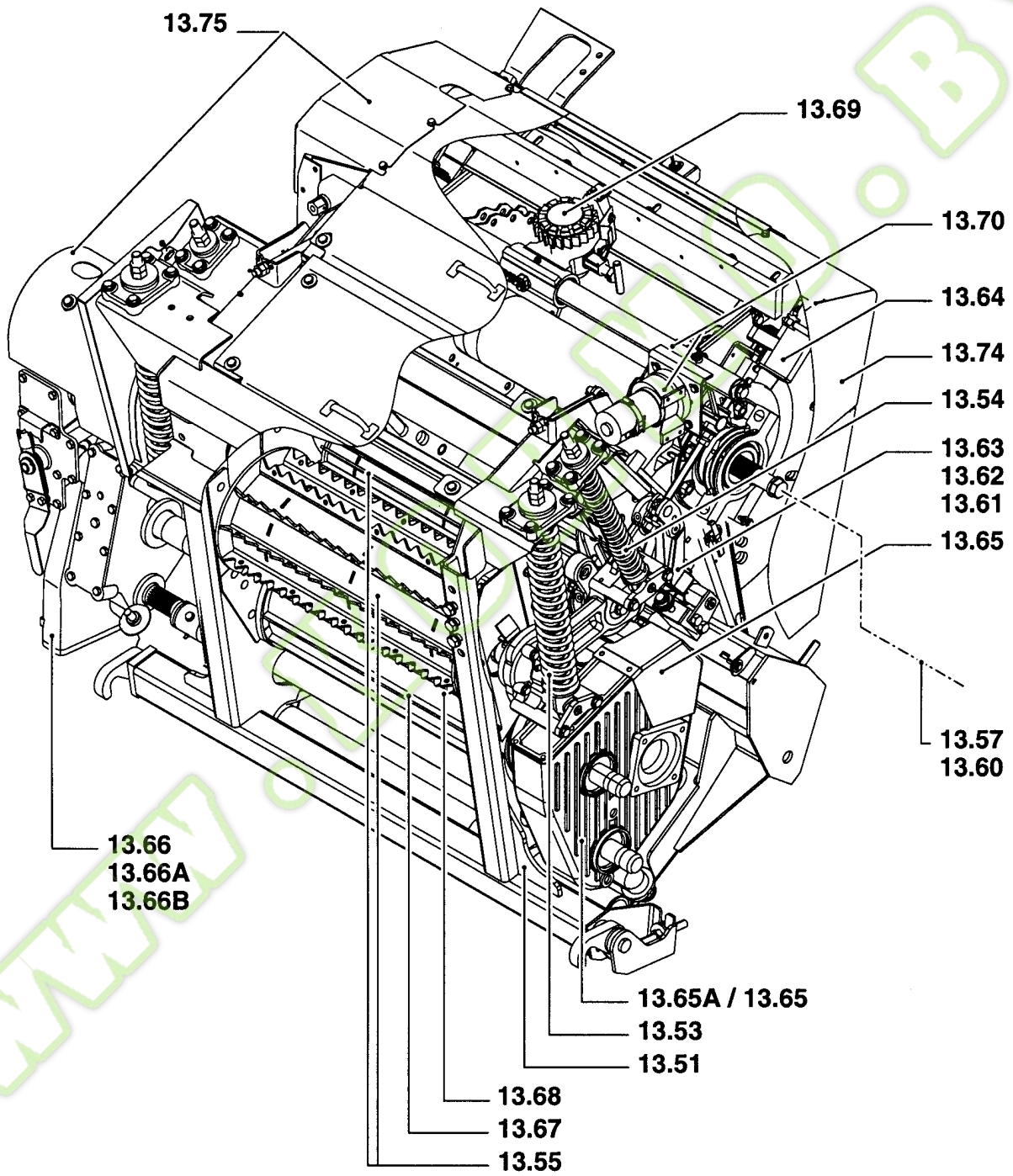

Ref	Part Number	Qty	Description

www.KOBMO.BY

CHOPPER BODY	**DISPOSITIF DE COUPE**	**MECANISMO DE CORTE**	**KNIVBOM**
DISPOSITIVO DI TAGLIO	**SCHNEIDWERK**	**DISPOSITIVO DE CORTE**	**MESSENTROMMEL**

SEC. 13

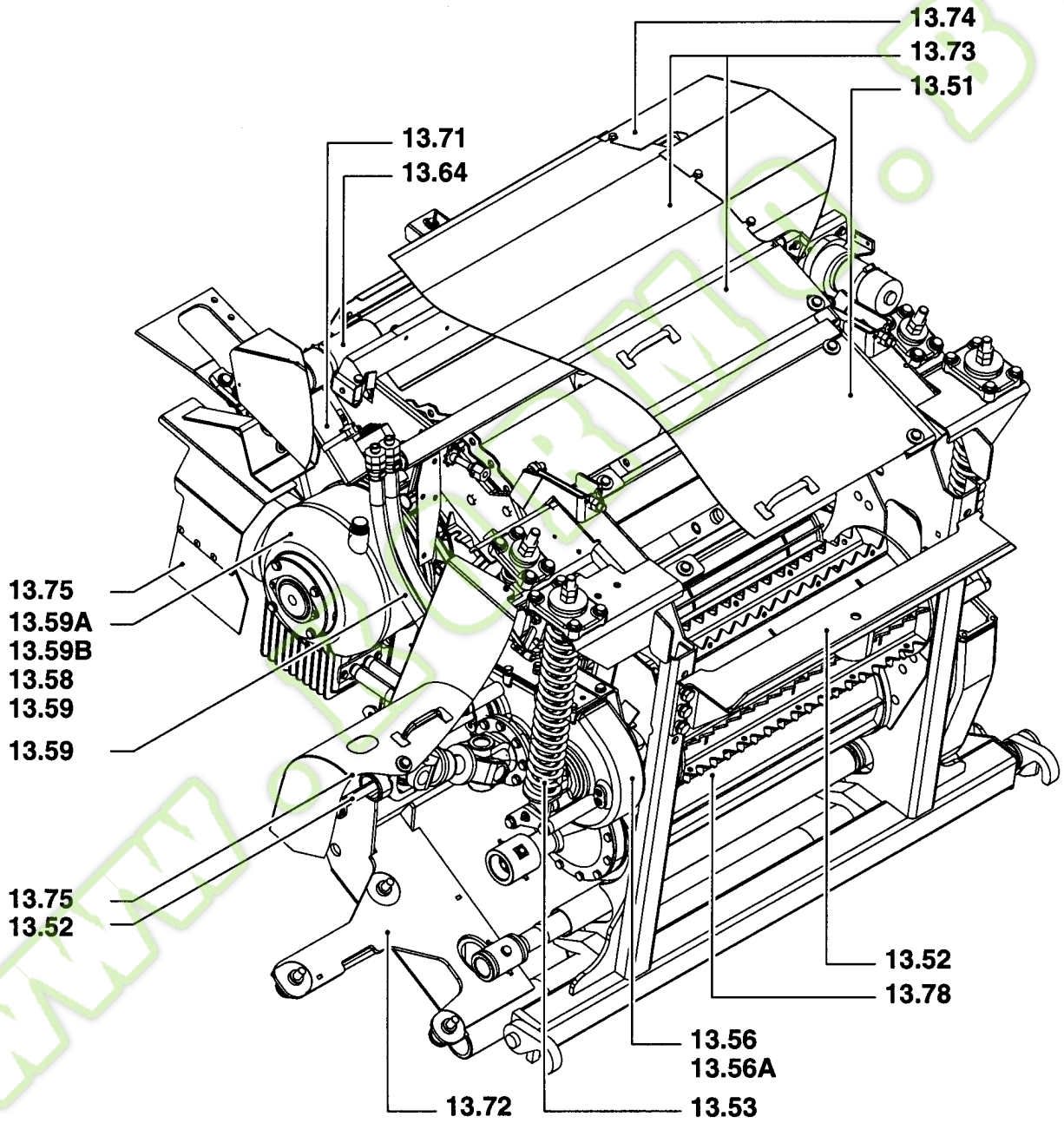

Ref	Part Number	Qty	Description

www.KOBMO.BY

CHOPPER BODY **DISPOSITIF DE COUPE** **MECANISMO DE CORTE** **KNIVBOM**

DISPOSITIVO DI TAGLIO **SCHNEIDWERK** **DISPOSITIVO DE CORTE** **MESSENTROMMEL**

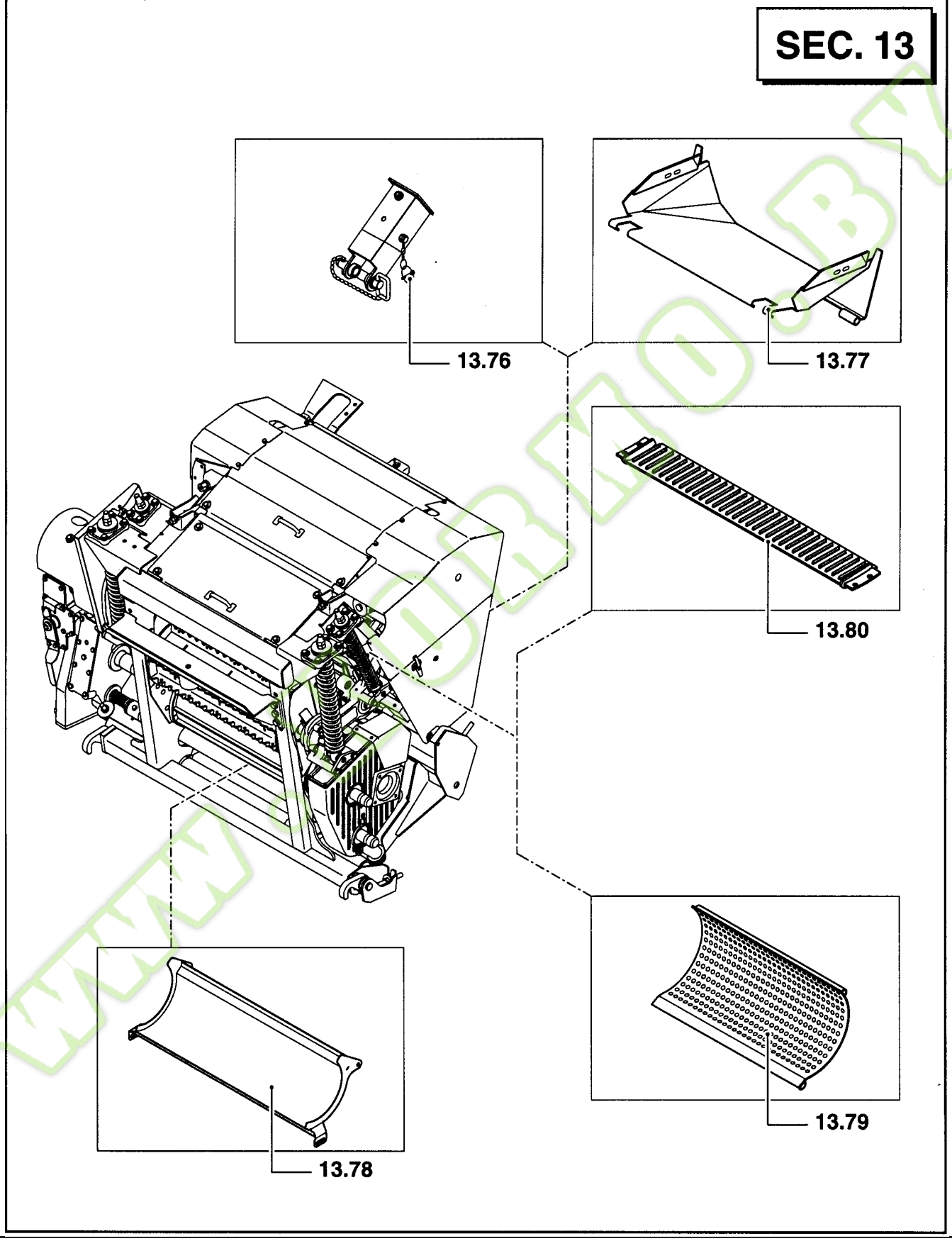

Ref	Part Number	Qty	Description

www.KORMO.BY

CROP PROCESSOR	CROP PROCESSOR	CROP PROCESSOR	CROP PROCESSOR
CROP PROCESSOR	CROP PROCESSOR	CROP PROCESSOR	CROP PROCESSOR

SEC. 14

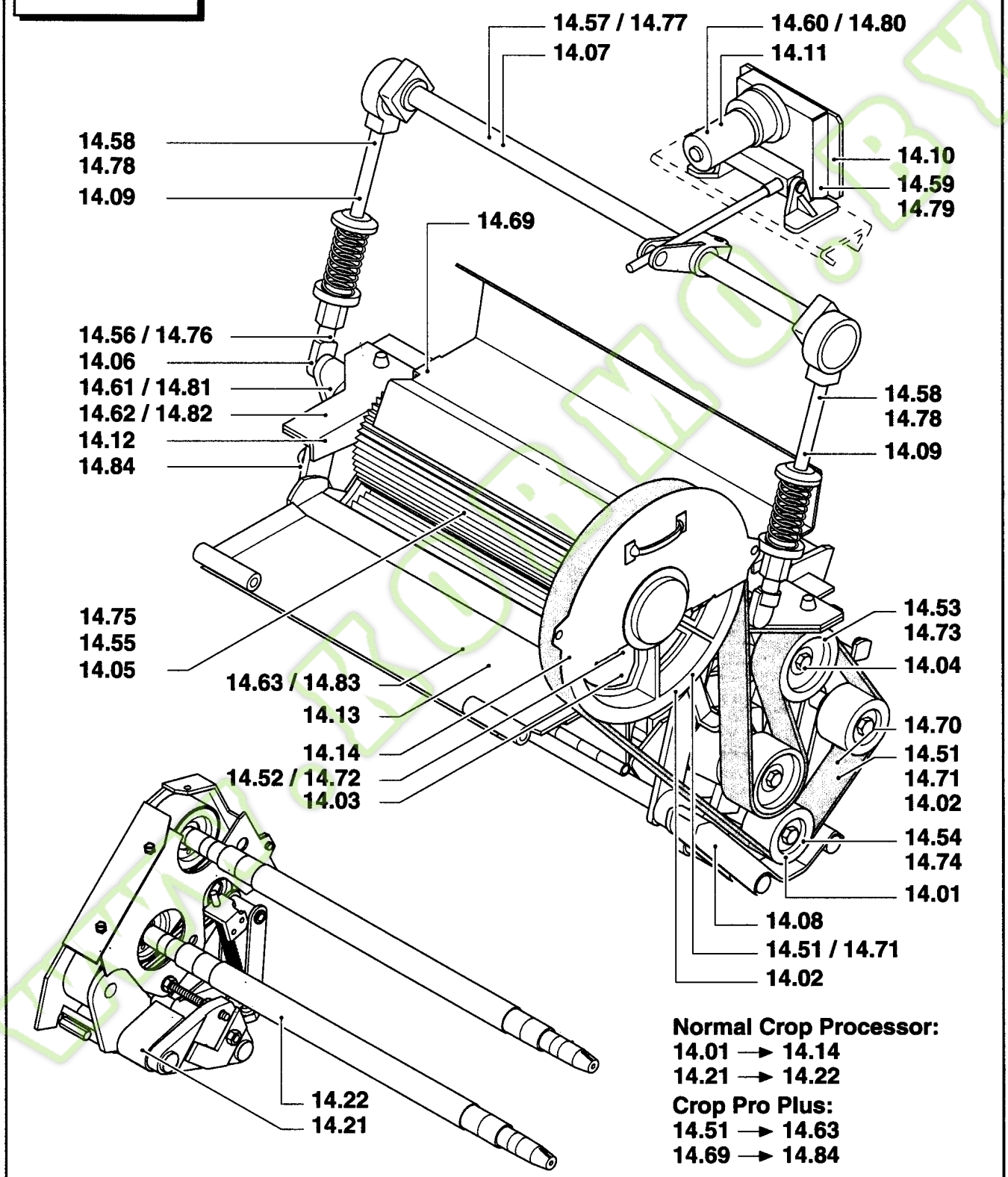

Normal Crop Processor:
14.01 → 14.14
14.21 → 14.22

Crop Pro Plus:
14.51 → 14.63
14.69 → 14.84

Ref	Part Number	Qty	Description

WWW.KORMO.BY

BLOWER	**SOUFFLERIE**	**VENTILADOR**	**BLÆSER**
VENTOLA	**GEBLÄSE**	**VENTILADOR**	**BLAZER**

SEC. 15

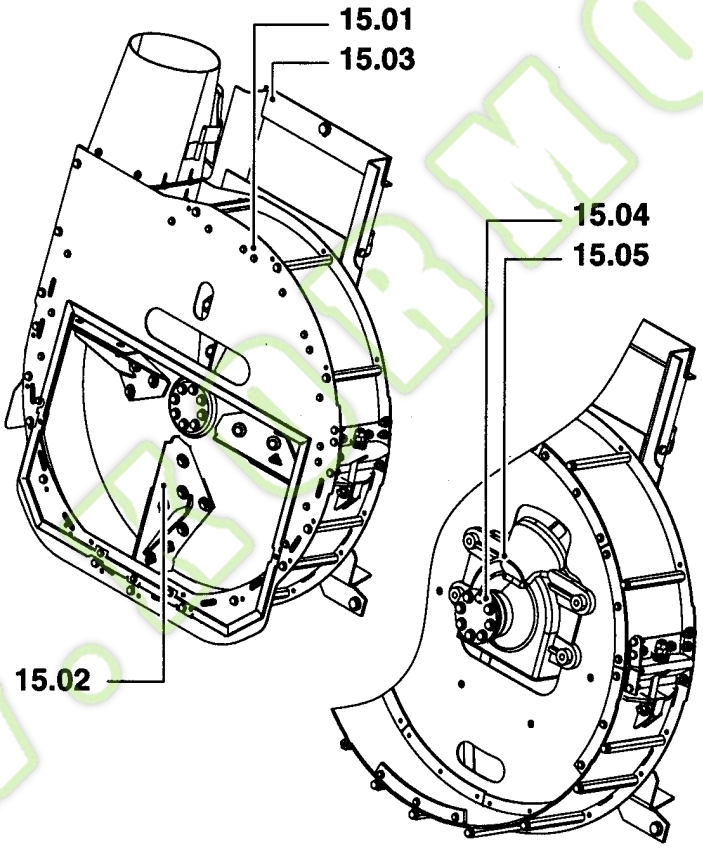

www.BOBMO.BY

Ref	Part Number	Qty	Description

WWW.KORMO.BY

BLOWER SPOUT	**GOULOTTE**	**BOCA DE DESCARGA**	**UDLØBSRØR**
BOCCA DI USCITA	**AUSWURFBOGEN**	**BOCA DE DESCARGA**	**AFVOERBUIS**

SEC. 16

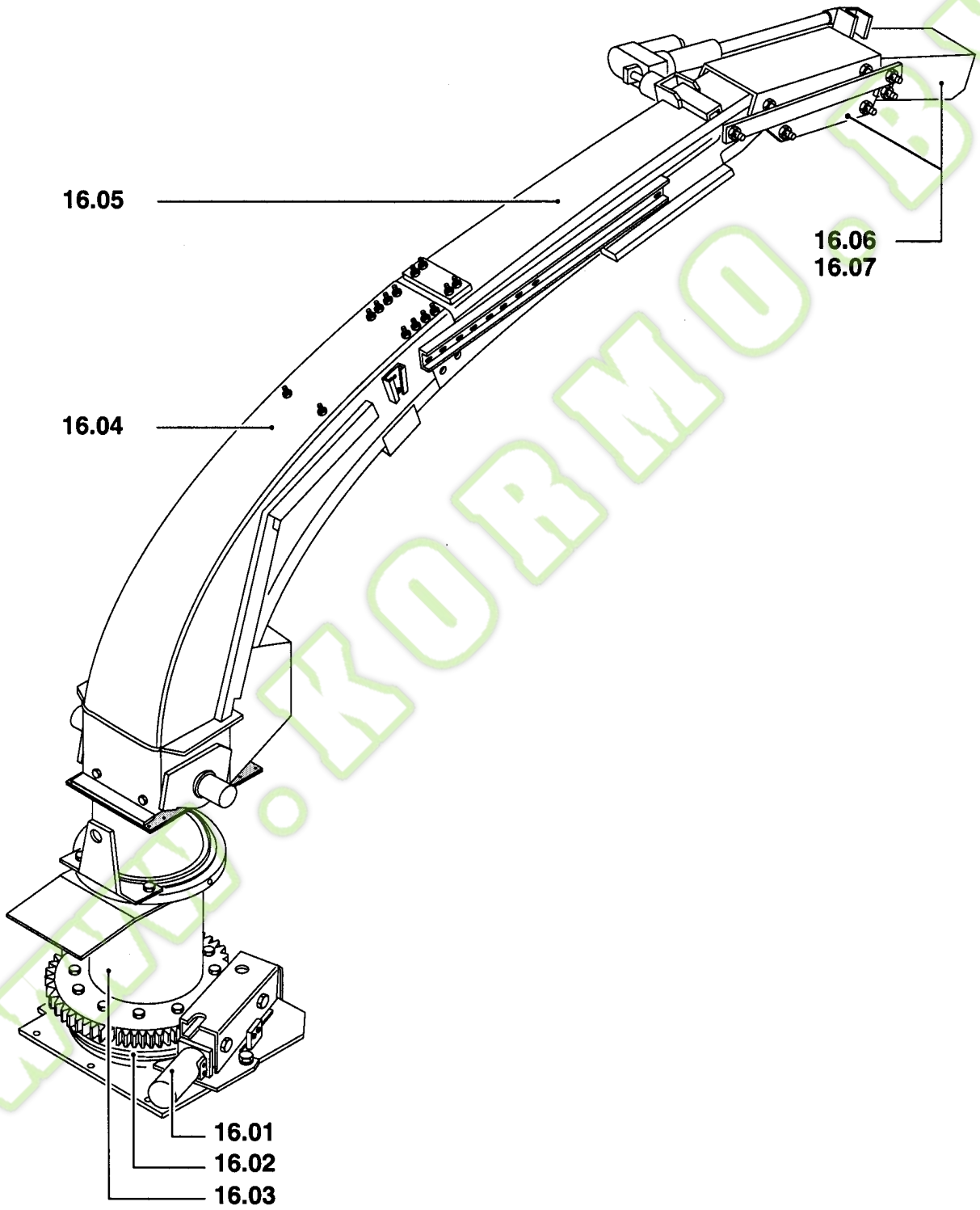

WWW.KOBMO.BY

Ref	Part Number	Qty	Description

www.KOBMO.BY

ACCESSORIES	**ACCESSOIRES**	**ACCESORIOS**	**TILBEHØR**
ACCESSORI	**ZUBEHÖR**	**ACESSORIOS**	**TOEBEHOREN**

SEC. 18

18.01

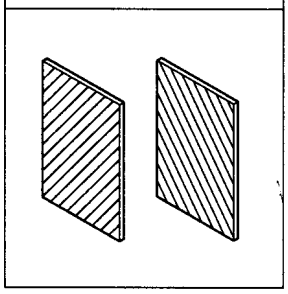

18.02

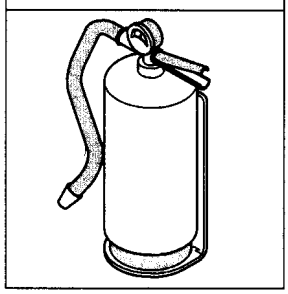

18.03

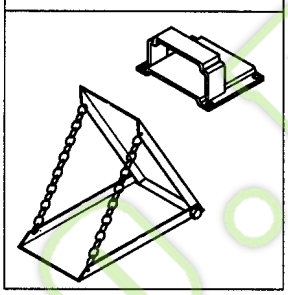

18.04

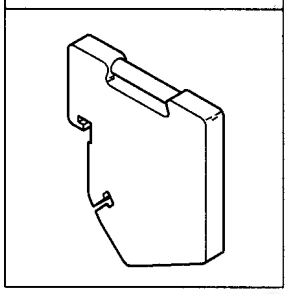

18.05

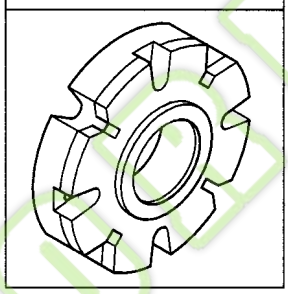

18.06

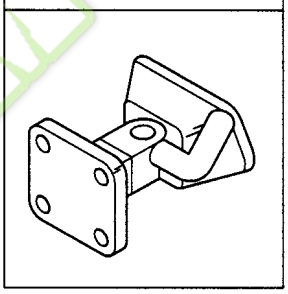

18.07

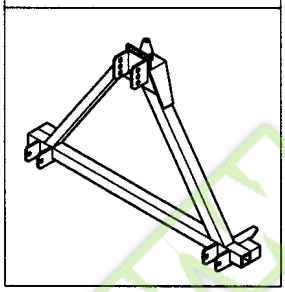

18.08

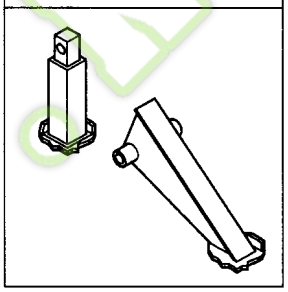

18.09

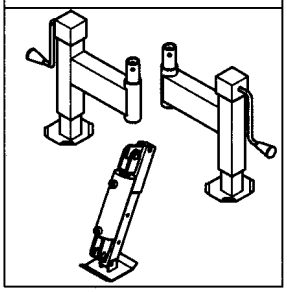

18.10

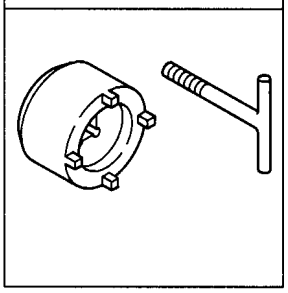

18.11

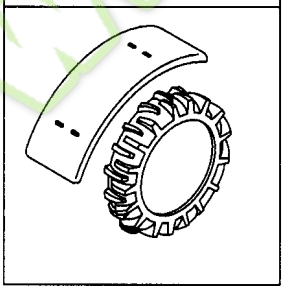

18.12

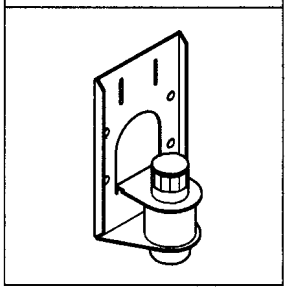

18.13

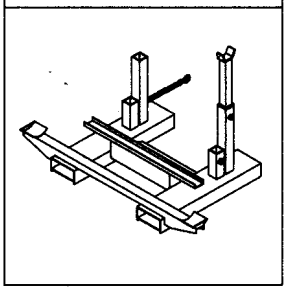

18.14

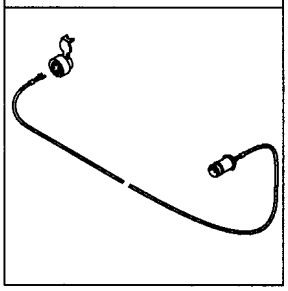

Ref	Part Number	Qty	Description

www.KORMO.BY

ATTACHMENTS	ACCESSOIRES	ACCESORIO	UDSTYR
ACCESSORIO	ZUBEHÖR	EQUIPAMENTOS	HULPSTUKKEN

SEC. 19

NOT APPLICABLE FOR THIS CATALOGUE
NON APPLICABILE PER QUESTO CATALOGO
PAS APPLICABLE POUR CE CATALOGUE
NICHT ANWENDBAR FÜR DIESEN KATALOG
NO APLICABLE PARA ESTE CATÁLOGO
NÃO APPLICABLE PARA NESTE CATÁLOGO
IKKE APLIKABEL FOR DENNE KATALOG
NIET VAN TOEPASSING VOOR DEZE CATALOGUS

www.DEMO.BY

Ref	Part Number	Qty	Description

www.KOBMO.BY

HEADERS	**BEC CUEILLEUR**	**BARRA**	**SKÆREBORDE**
BARRA	**SCHNEIDWERK**	**CABEÇALHO DE CEIFA**	**MAAIBORDEN**

SEC. 20

346W - 356W - 366W
SEE CATALOGUE 6032603500

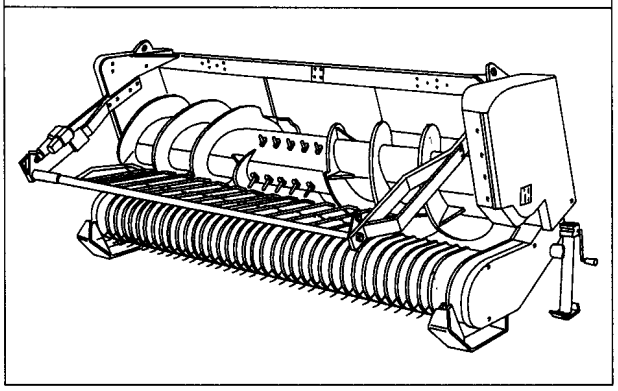

360N4
SEE CATALOGUE 6032602000

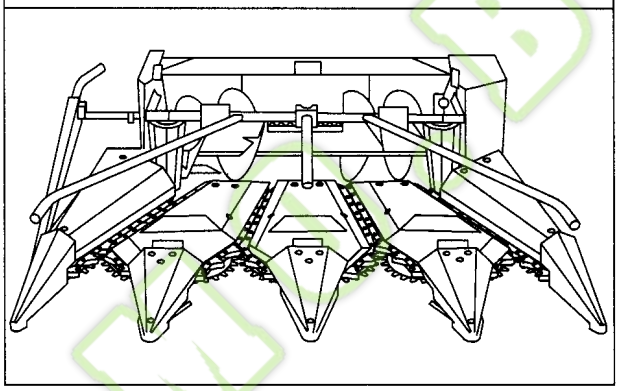

986F - MF600 Series
SEE CATALOGUE 6032700700

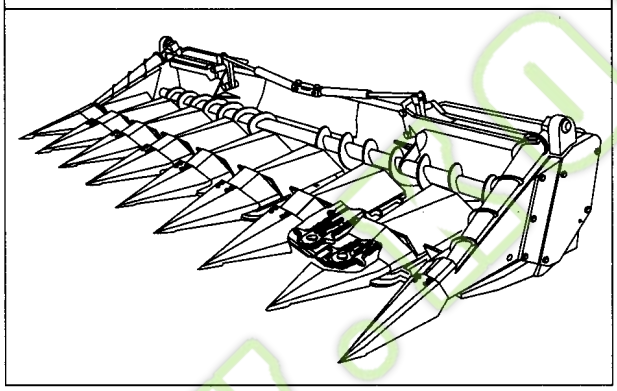

DC510
SEE CATALOGUE 6032603400

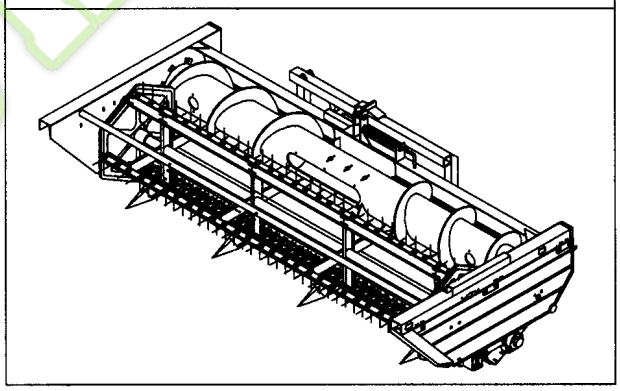

RI450
SEE CATALOGUE 6032603700

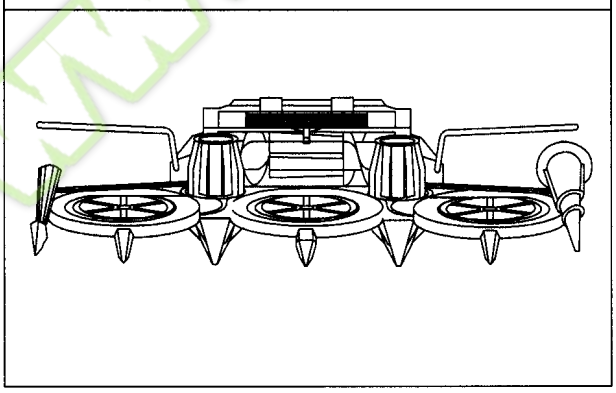

RI600
SEE CATALOGUE 6032603700

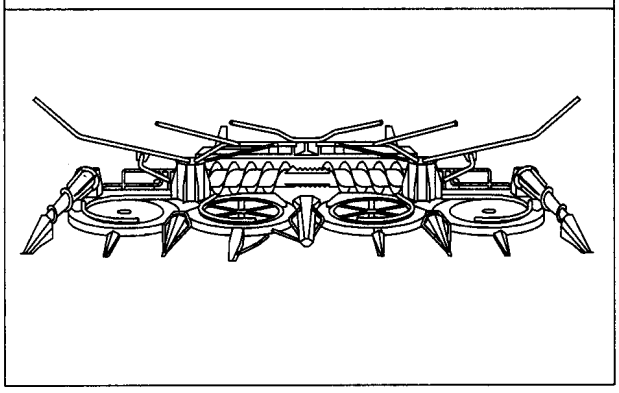

Ref	Part Number	Qty	Description

WWW.KORMO.BY

VERSION LIST
ELENCO VERSIONI
LISTE DE VERSION
VERZEICHNIS DER VERSIONEN

LISTA DE VERSIONES
LISTA DAS VERSÕES
TYPELISTE
LIJST VAN VERSIES

Vehicle / Modello / Modele / Modells	Modelo / Modelo / Model / Model	Chassi / Telaio / Chassis / Fahrgestell	Chasis / Armação / Stativ / Raam	Engine / Motore / Moteur / Motor	Motor / Motor / Motor / Motor
FX30		355262001 >>			
FX30 NA		405262001 >> 355262xxx >>			
FX40		365262001 >>			
FX40 NA		415262001 >> 365262xxx >>			
FX50		375262001 >>			
FX50 NA		375262xxx >>			
FX60		385262001 >>			
FX60 NA		425262001 >> 385262xxx >>			

www.NOBMO.BY

FX50 SELF-PROPELLED FORAGE HARVESTER (10/02-)

0.0037(01) VERSION LIST

Ref	Part Number	Qty	Description

www.KOBMO.BY

IDENTIFICATION PLATES
TARGHETTE DI IDENTIFICAZIONE
PLAQUES D'IDENTIFICATION
TYPENSCHILDER

PLACAS DE IDENTIFICACIÓN
CHAPAS DE IDENTIFICAÇÃO
IDENTIFIKATIONSPLADER
IDENTIFICATIEPLATEN

VEHICLE IDENTIFICATION
IDENTIFICAZIONE MODELLO
IDENTIFICATION MODELE
KENNZEICHEN MODELLS
IDENTIFICACION MODELO
IDENTIFICAÇÃO DO MODELO
MODELKENDINGSPLADE
MODELIDENTIFICATIE

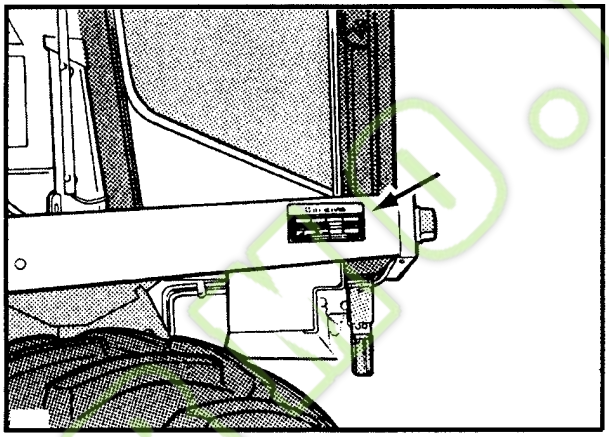

ENGINE IDENTIFICATION
IDENTIFICAZIONE MOTORE
IDENTIFICATION MOTEUR
KENNZEICHEN MOTOR
IDENTIFICACION MOTOR
IDENTIFICAÇÃO DO MOTOR
MOTORKENDINGSPLADE
MOTORIDENTIFICATIE

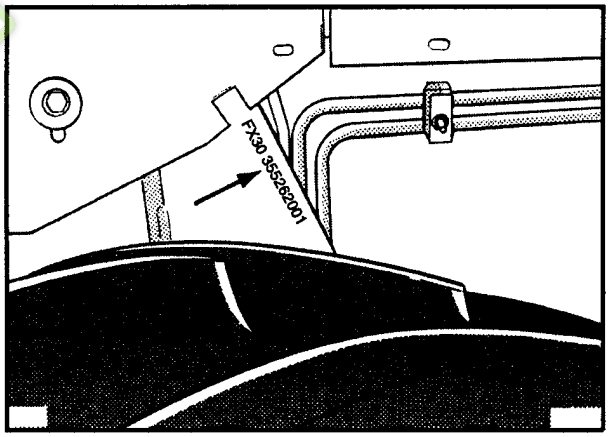

www.ROMO.BY

0.0038(01) IDENTIFICATION PLATES

Ref	Part Number	Qty	Description

WWW.KORMO.BY

MAINTENANCE PARTS
PARTICOLARI PER LA MANUTENZIONE
PIECES DE MAINTENANCE
TEILE FÜR DIE INSTANDHALTUNG

PIEZAS DE MANTENIMIENTO
PEÇAS DE MANUTENÇÃO
VEDLIGEHOLDELSESDELE
ONDERDELEN VOOR ONDERHOUD

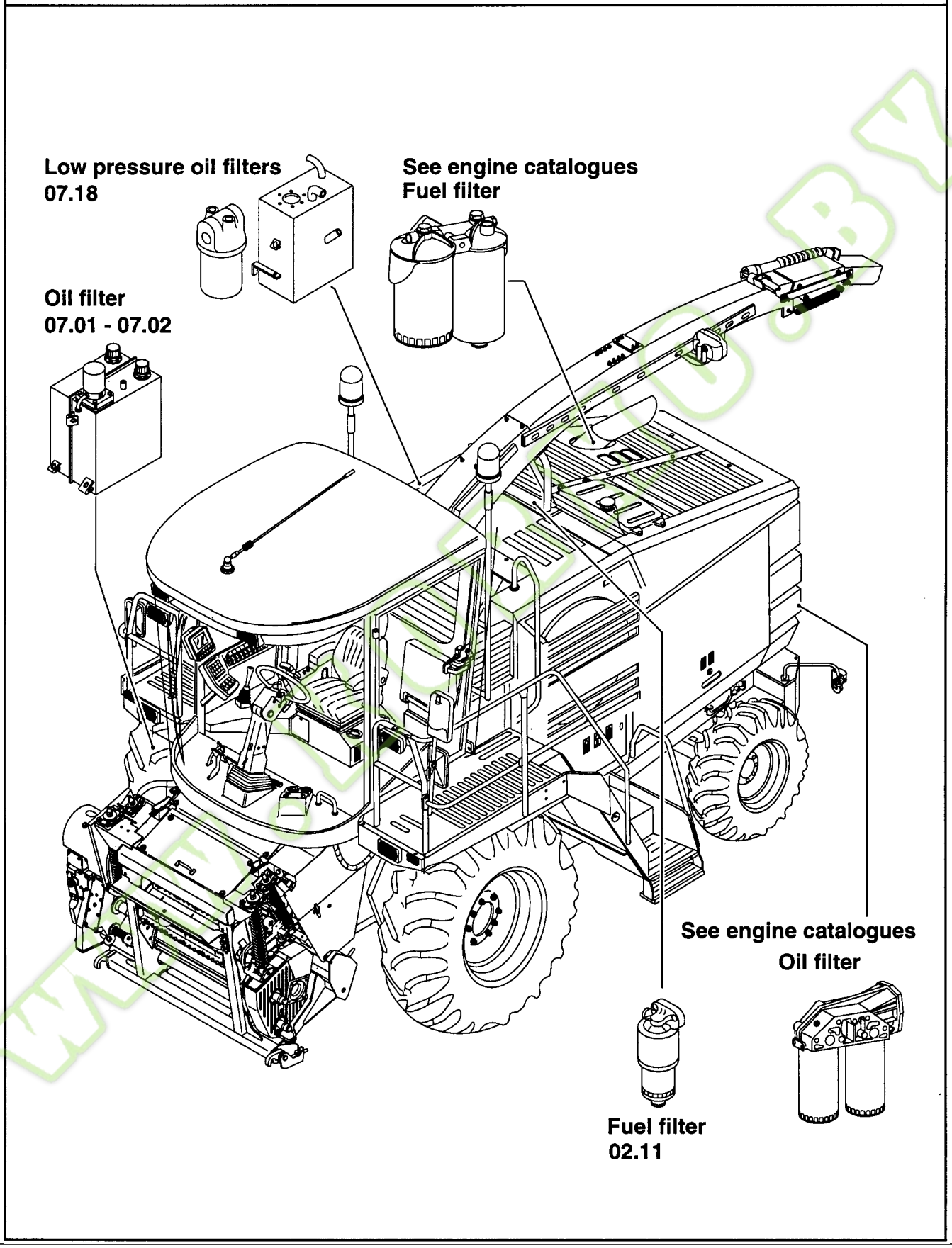

0.0039(01) MAINTENANCE PARTS

Ref	Part Number	Qty	Description

www.KORMO.BY

CODE TABLE
TABELLA CODICI
TABLE DES CODES
KODETABELLE

TABLA DE CÓDIGOS
TABELA DE CÓDIGOS
KODESKEMA
CODETABEL

Rules for modification codes

Identify the 3 mid digits (=SERIES) of the serial number of your machine. Eg.: 165**102**032

Modification codes begin with:
C for a part number valid UNTIL series ...,
F for a part number valid FROM series ... UNTIL series ...,
D for a part number valid FROM series ... ONWARDS.

Example:
C092: part number valid until series 092
F093109: part number valid between series 093 and 109
D110: part number valid from series 110 onwards
If your machine has serial number 165**102**032, choose the second part number in our example since 102 is between 093 and 109.

Explicación de los códigos de modificación

Identifique las tres cifras centrales (=SERIE) del número de serie de la máquina. Ej.: 165**102**032

Los códigos de modificación inician con:
C para el número de pieza válido HASTA la serie ...,
F para el número de pieza válido DESDE la serie ... HASTA la serie...,
D para el número de pieza válido A PARTIR DE la serie ...,

Ejemplo:
C092: número de pieza válido hasta la serie 092
F093109: número de pieza válido entre las series 093 y 109
D110: número de pieza válido a partir de la serie 110
Si su máquina presenta el número de serie 165**102**032, escoja el segundo número de pieza de nuestro ejemplo, ya que el 102 se encuentra entre 093 y 109.

Spiegazione dei codici di modifica

Identificate le 3 cifre centrali (=SERIE) del numero di serie della macchina. Es.: 165**102**032

I codici di modifica iniziano con:
C per numero di particolare valido FINO alla serie ...,
F per numero di particolare valido DALLA serie ... FINO alla serie ...,
D per numero di particolare valido DALLA serie ... IN AVANTI.

Esempio:
C092: numero di particolare valido fino alla serie 092
F093109: numero di particolare valido tra le serie 093 e 109
D110: numero di particolare valido dalla serie 110 in avanti
Se la vostra macchina ha il numero di serie 165**102**032, scegliete il secondo numero di particolare nel nostro esempio, dato che 102 si trova tra 093 e 109.

Explicação para os códigos de modificação

Identifique os 3 dígitos centrais (=SÉRIE) do número de série da sua máquina. Ex.: 165**102**032

Os códigos de modificação começam com:
C para número de peça válido ATÉ à série ...,
F para número de peça válido DA série ... ATÉ à série ...,
D para número de peça válido DA série ... EM DIANTE.

Exemplo:
C092: número de peça válido até à série 092
F093109: número de peça válido entre as séries 093 e 109
D110: número de peça válido da série 110 em diante
Se o número de série da sua máquina for 165**102**032, seleccione o segundo número de peça no nosso exemplo, visto que 102 está entre 093 e 109.

Explication des codes de modification

Identifiez les 3 chiffres au centre (=SERIE) du numéro de série de la machine. Ex. : 165**102**032

Les codes de modification commencent par :
C pour un numéro de pièce valable JUSQU'A la série...,
F pour un numéro de pièce valable DE la série ... JUSQU'A la série...,
D pour un numéro de pièce valable A PARTIR de la série..

Exemple :
C092 : numéro de pièce valable jusqu'à la série 092
F093109 : numéro de pièce valable entre les séries 093 et 109
D110 : numéro de pièce valable à partir de la série 110
Si votre machine a le numéro de série 165**102**032, choisissez le second numéro de pièce comme sur notre exemple, vu que 102 se situe entre 093 et 109.

Retningslinier for ændringskoder

Find frem til de 3 midterste cifre (=SERIEN) i maskinens serienummer (eksempelvis 165**102**032).

Ændringskoderne begynder med:
C for art. nr. gældende TIL serie ...
F for art. nr. gældende FRA serie ... TIL serie ...
D for art. nr. gældende FRA serie ... FF.

Eksempel:
C092: art. nr. gældende til serie 092
F093109: art. nr. gældende fra serie 093 til serie 109
D110: art. nr. gældende fra serie 110 ff.
Vælg det andet art. nr. i vores eksempel, hvis maskinen har serienummer 165**102**032, idet tallet 102 er mellem 093 og 109.

Erläuterungen zu den Änderungscodes

Ermittlung der 3 zentralen Stellen (=SERIENNUMMER) der Baureihennummer der Maschine. Bsp.: 165**102**032

Die Änderungscodes beginnen mit:
C für die Teilnummer, dessen Gültigkeit BIS zur Serie ... besteht,
F für die Teilnummer, dessen Gültigkeit AB der Serie ... BIS zur Serie ... besteht,
D für die Teilnummer, dessen Gültigkeit AB der Serie ... und für die DARAUF FOLGENDEN Serien besteht,

Beispiel:
C092: bis zur Serie 092 gültige Teilenummer
F093109: zwischen den Serien 093 und 109 gültige Teilenummer
D110: für die Serie 110 und die darauf folgenden Serien gültige Teilenummer
Ist Ihre Maschine mit der Baureihennummer 165**102**032 versehen, so wählen Sie die zweite Teilenummer aus unserem Beispiel, da 102 zwischen 093 und 109 liegt.

Uitleg van de aanpassingscodes

Stel de 3 middelste cijfers (=SERIE) van het serienummer van de machine vast. Bijv.: 165**102**032

De aanpassingscodes beginnen met:
C onderdeelnummer dat geldt TOT de serie ...,
F onderdeelnummer dat geldt VANAF de serie ... TOT de serie ...,
D onderdeelnummer dat geldt VANAF de serie ... .

Voorbeeld:
C092: onderdeelnummer dat geldt tot de serie 092
F093109: onderdeelnummer dat geldt voor de series tussen 093 en 109
D110: onderdeelnummer dat geldt vanaf de serie 110
Heeft uw machine serienummer 165**102**032, kies dan het tweede onderdeelnummer uit ons voorbeeld, aangezien 102 zich tussen 093 en 109 bevindt.

FX50 SELF-PROPELLED FORAGE HARVESTER (10/02-)

0.0041(01) CODE TABLE

Ref	Part Number	Qty	Description

www.KORMO.BY

CODE TABLE
TABELLA CODICI
TABLE DES CODES
KODETABELLE

TABLA DE CÓDIGOS
TABELA DE CÓDIGOS
KODESKEMA
CODETABEL

CODE	FX
C265	---262001 to ---265999
C269	---262001 to ---269999
C273	---262001 to ---273999
C277	---262001 to ---277999
C281	---262001 to ---281999
C289	---262001 to ---289999
C291	---262001 to ---291999
C293	---262001 to ---293999
C305	---262001 to ---305999
C314	---262001 to ---314999
C317	---262001 to ---317999
C322	---262001 to ---322999
C325	---262001 to ---325999
C327	---262001 to ---327999
C329	---262001 to ---329999
C333	---262001 to ---333999
C345	---262001 to ---345999
C357	---262001 to ---357999
C369	---262001 to ---369999
C373	---262001 to ---373999
D266	from ---266001 onwards
D270	from ---270001 onwards
D274	from ---274001 onwards
D278	from ---278001 onwards
D282	from ---282001 onwards
D286	from ---286001 onwards
D290	from ---290001 onwards
D292	from ---292001 onwards
D294	from ---294001 onwards
D298	from ---298001 onwards
D306	from ---306001 onwards
D315	from ---315001 onwards
D318	from ---318001 onwards
D323	from ---323001 onwards
D326	from ---326001 onwards
D328	from ---328001 onwards
D330	from ---330001 onwards
D334	from ---334001 onwards
D342	from ---342001 onwards
D346	from ---346001 onwards
D358	from ---358001 onwards
D370	from ---370001 onwards
D374	from ---374001 onwards
F278285	---278001 to ---285999
F278341	---278001 to ---341999
F290305	---290001 to ---305999

www.BINO.BY

FX50 SELF-PROPELLED FORAGE HARVESTER (10/02-)

0.0041A(01) CODE TABLE

Ref	Part Number	Qty	Description

www.KORMO.BY

ENGINE	**MOTEUR**	**MOTOR**	**MOTOR**
MOTORE	**MOTOR**	**MOTOR**	**MOTOR**

SEC. 1

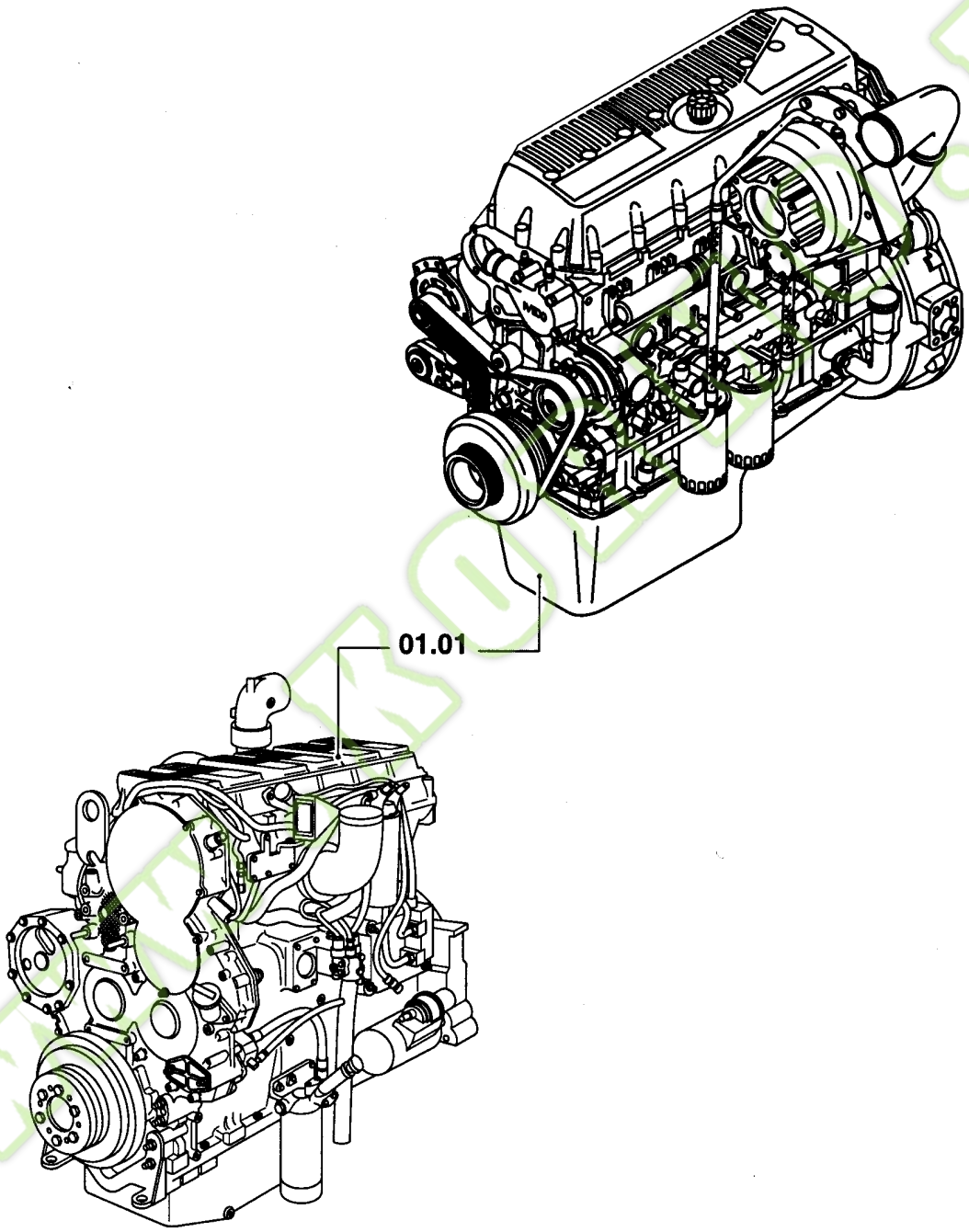

01.000(01) SECTION LIST 1

Ref	Part Number	Qty	Description

WWW.KOBMO.BY

01.01(01) COMPLETE ENGINE

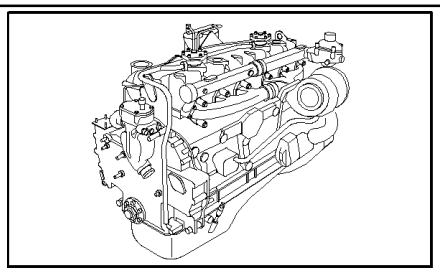

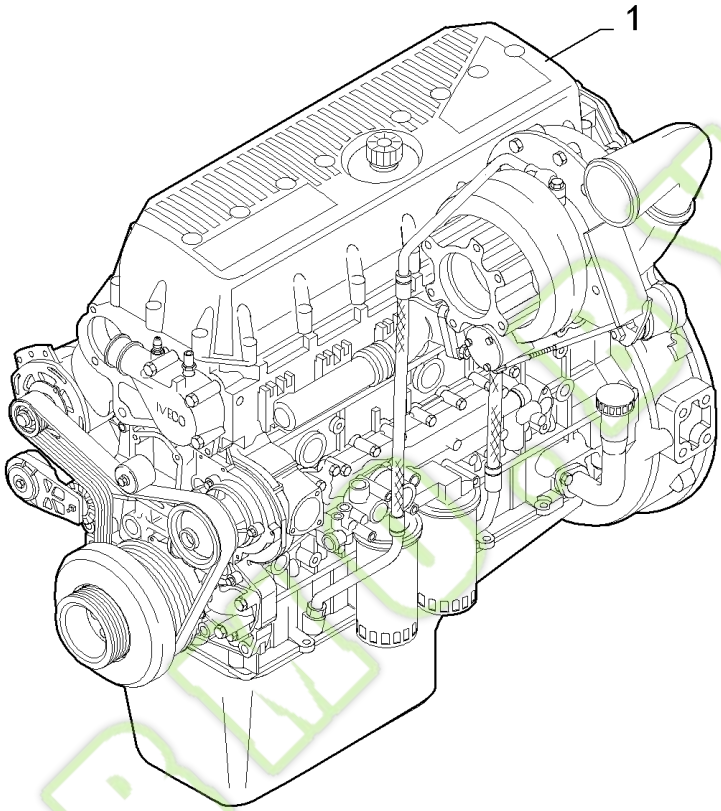

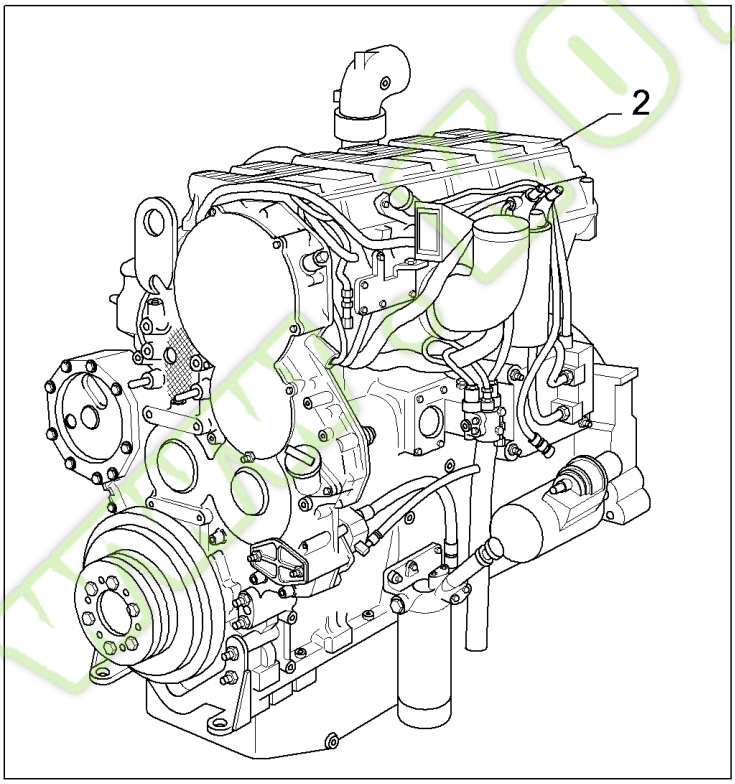

FX50 SELF-PROPELLED FORAGE HARVESTER (10/02-)

01.01(01) COMPLETE ENGINE

Ref	Part Number	Qty	Description
1	84072065	1	ENGINE, , FOR FX30 AND FX30 NA ONLY, SEE MODEL F3AE0684E*B002 FOR PARTS, BSN C305
1	84819474	1	ENGINE, , FOR FX30 AND FX30 NA ONLY, SEE MODEL F3AE0684EB006, ASN D306
1	84432795	1	ENGINE, , FOR FX40-FX40NA ONLY, SEE MODEL F3BE0684A*B001 FOR PARTS , BSN C305
1	84819475	1	ENGINE, , FOR FX40-FX40NA ONLY, SEE MODEL F3BE0684AB002, ASN D306
1	84432796	1	ENGINE, , FOR FX50 ONLY, SEE MODEL F3BE0684E*B001 FOR PARTS, BSN C305
1	84819476	1	ENGINE, , SEE MODEL F3BE0684EB003, FOR FX50-FX50NA ONLY, ASN D306
2	NS	1	NOT SERVICED, TIER II - CAT C-15 Engine, FOR FX60 ONLY (CONTACT YOUR LOCAL CATERPILLAR DEALER FOR ORDERING PARTS) + FX60 NA

www.KOBMO.BY

ENGINE EQUIPMENT | **EQUIPEMENT MOTEUR** | **EQUIPO MOTOR** | **MOTORUDSTYR**

EQUIPAGGIAMENTO MOTORE | **MOTORAUSRÜSTUNG** | **EQUIPAMENTO DO MOTOR** | **MOTORUITRUSTING**

SEC. 2

FX30-40-50 IVECO

02.03 → 02.10
02.14

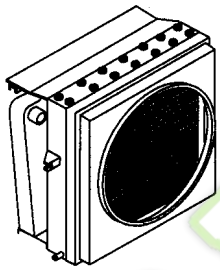

02.01

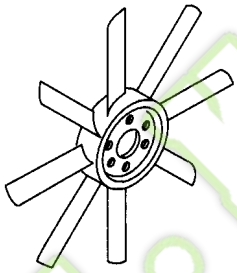

02.02

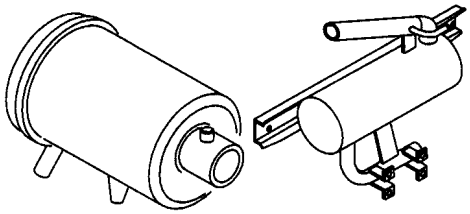

02.11 - 02.12 - 02.13

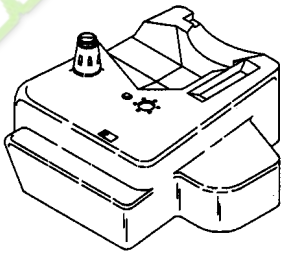

02.15 - 02.16

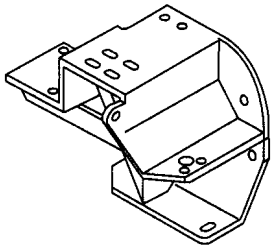

www.KORMO.BY

02.000(01) SECTION LIST 2

Ref	Part Number	Qty	Description

www.KOBMO.BY

ENGINE EQUIPMENT **EQUIPEMENT MOTEUR** **EQUIPO MOTOR** **MOTORUDSTYR**

EQUIPAGGIAMENTO MOTORE **MOTORAUSRÜSTUNG** **EQUIPAMENTO DO MOTOR** **MOTORUITRUSTING**

SEC. 2

FX60 CATERPILLAR

02.67 - 02.68

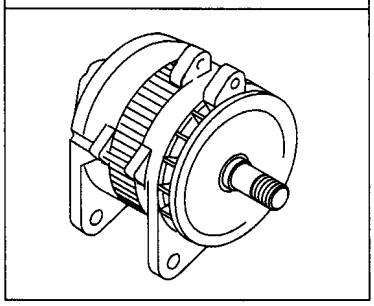

02.51

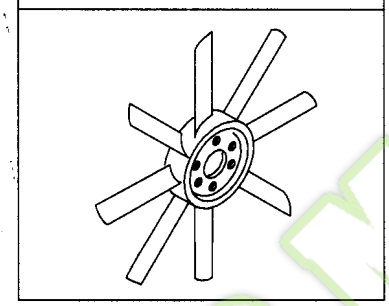

02.55 → 02.61
02.69

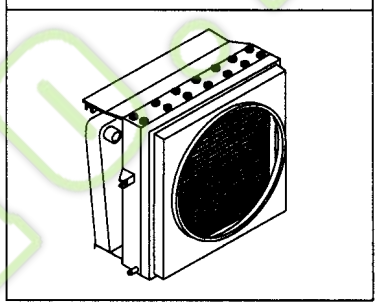

02.54

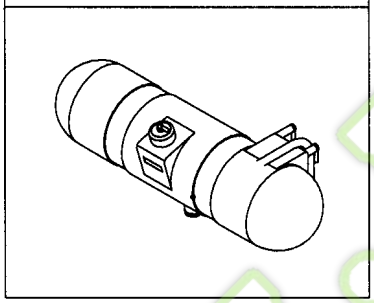

02.65 - 02.66

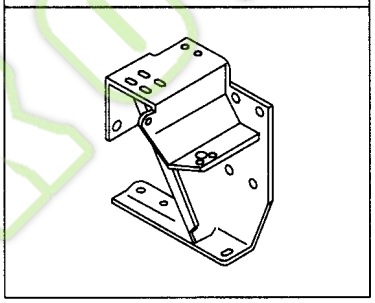

02.59

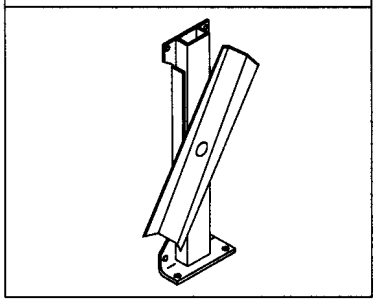

02.53

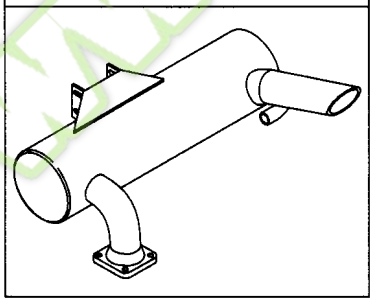

02.52

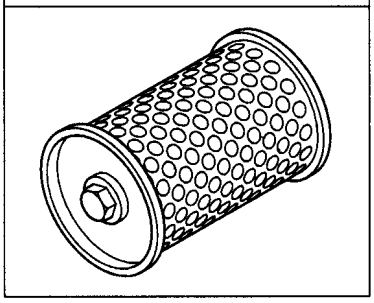

02.62 - 02.63 - 02.64

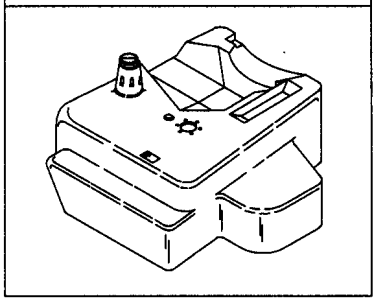

WWW.KOBMOBY

02.000(02) SECTION LIST 2

Ref	Part Number	Qty	Description

www.KOBMO.BY

02.01(01) FAN

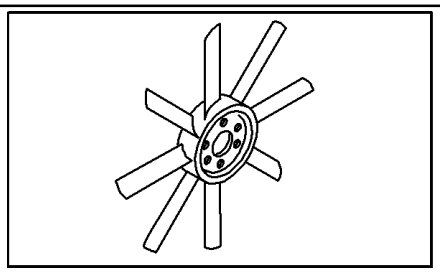

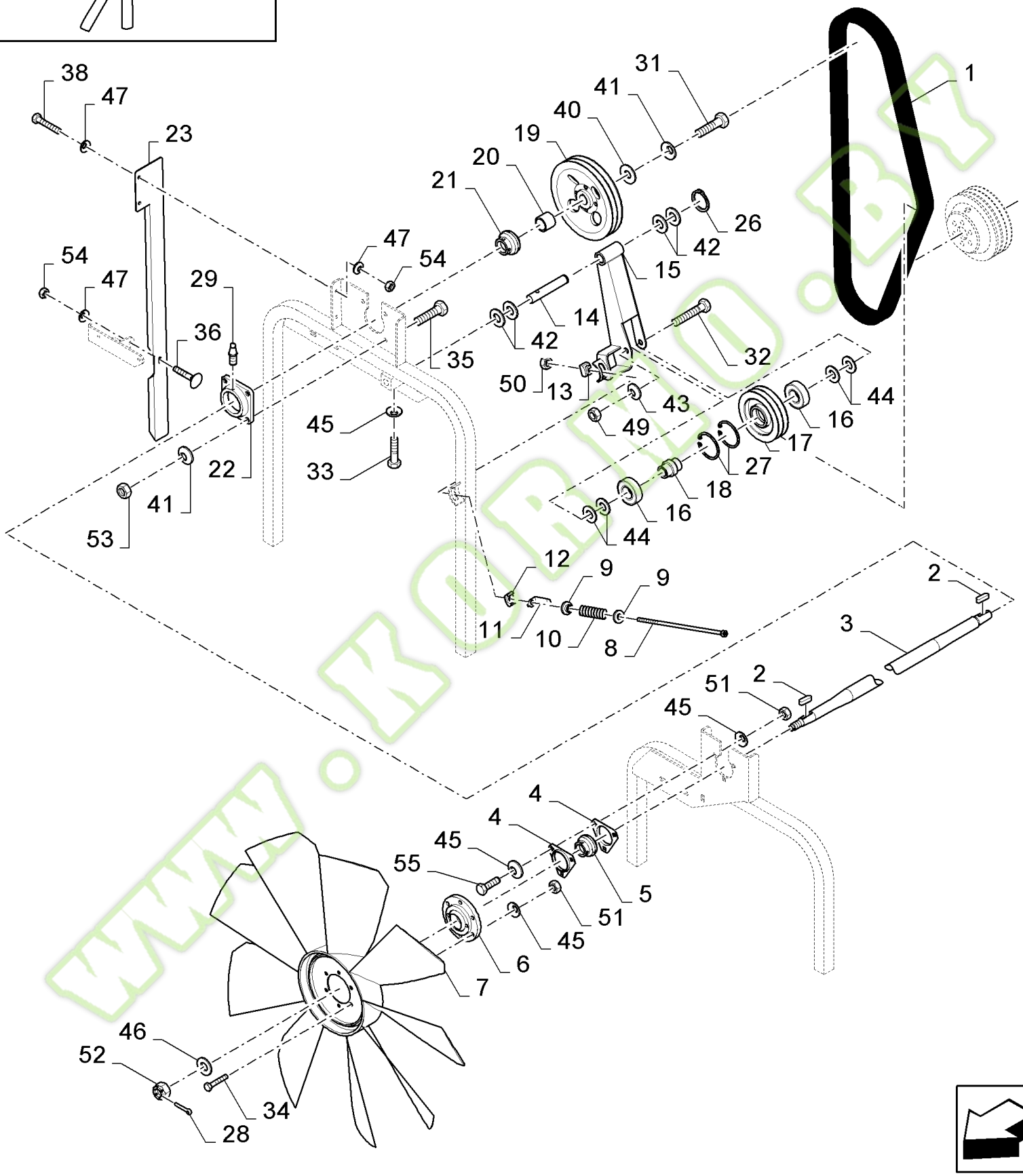
38
47
23
54
47
29
36
22
41
53
47
54
35
45
33
31
41
40
19
20
21
26
42
15
14
42
32
50
13
43
49
44
16
17
27
18
16
44
12
9
9
11
10
8
2
3
51
2
45
4
4
45
55
5
51
45
6
7
46
52
34
28

FX50 SELF-PROPELLED FORAGE HARVESTER (10/02-)

02.01(01) FAN

Ref	Part Number	Qty	Description
1	84073615	1	BELTS, SET OF 2, , FOR FX30 ONLY, FOR FX50 NA ONLY
1	84073615	1	BELTS, SET OF 2, , FOR FX40-50 ONLY, BSN C369
1	84057609	1	BELTS, SET OF 2, , FOR FX40-50 ONLY, ASN D370
2	170008	2	KEY, {PP:80170008}
3	84077497	1	SHAFT, , FOR FX40-50 ONLY
3	84077490	1	SHAFT, , FOR FX30 ONLY
4	86548970	2	FLANGE,
5	84069440	1	BEARING ASSY,
6	84806885	1	FLANGE,
7	84077270	1	FAN, , FOR FX30 ONLY, FOR FX50 NA ONLY
7	84077270	1	FAN, , FOR FX40-50 ONLY, BSN C369
7	84012323	1	FAN, , FOR FX40-50 ONLY, ASN D370
8	84072445	1	ROD, THREADED, Hex, M10 x 370, 8.8, Full Thd,
9	84076699	2	BUSHING,
10	66317	1	SPRING, {PP:80066317}
11	84439578	1	INDICATOR,
12	442398	1	PAD, ADJUSTING, {PP:80442398}
13	754131	1	PAD, ADJUSTING, {PP:80754131}
14	84077726	1	PIN,
15	84434388	1	ARM,
16	443898	2	BEARING ASSY, {PP:80443898}
17	84437137	1	PULLEY,
18	84017221	1	BUSHING,
19	84075109	1	PULLEY, , FOR FX30 ONLY
19	84075109	1	PULLEY, , FOR FX40-50 ONLY, BSN C369
19	84806887	1	PULLEY, , FOR FX40-50 ONLY, ASN D370
19	84455386	1	PULLEY, , FOR FX50 NA ONLY
20	84075290	1	BUSHING,
21	84069410	1	BEARING ASSY,
22	84437150	1	HOUSING, BEARING,
23	84433245	1	SUPPORT,
26	80370002	1	CIRCLIP,
27	370011	2	CIRCLIP, {PP:80370011}
28	300595	1	PIN, SPLIT (COTTER), {PP:80300595} M4 x 40,
29	9838669	1	NIPPLE, LUBE, {PP:89838669}
31	300389	1	SCREW, {PP:80300389} Hex, M12 x 35, 8.8, Full Thd, M12x35
32	120093	1	SCREW, {PP:80120093} Hex, M16 x 80, 8.8, Hex, M16 x 80, 8.8
33	43140	1	BOLT, {PP:80043140} Hex, M10 x 30, 8.8, M10x30
34	120068	6	SCREW, {PP:80120068} Hex, M10 x 40, 8.8, Full Thd, M10x40
35	86629541	4	BOLT, Hex, M12 x 40, 8.8, Full Thd, M12x40
36	120037	1	BOLT, {PP:80120037} Short NK, M8 x 20, Cl8.8, Full Thd, M8x20
38	43128	2	SCREW, {PP:80043128} Hex, M8 x 30, 8.8, Cap, HH, CL 8.8, M8 x 1.25 x 30
40	140085	1	WASHER, {PP:80140085}
41	140046	5	WASHER, LOCK, {PP:80140046} Belleville, M12, 12MM
42	140103	4	WASHER, {PP:80140103}

LMT.KOBMO.BY

02.01(01) FAN

Ref	Part Number	Qty	Description
43	140048	1	WASHER, LOCK, {PP:80140048} Belleville, M16, 16MM
44	378246	4	WASHER, {PP:80378246} 16MM
45	140045	10	WASHER, LOCK, {PP:80140045} Belleville, M10, 10MM
46	9506874	1	WASHER, {PP:89506874}
47	322358	5	WASHER, LOCK, {PP:80322358} Belleville, M8, 8MM
49	100020	1	NUT, {PP:80100020} M16, Cl 8, M16, Cl 8
50	86514720	1	NUT, LOCK, M10
51	100016	9	NUT, {PP:80100016} M10, Cl 8, M10
52	412144	1	SLOTTED NUT, {PP:80412144} M20 x 1.5, Cl 8, M20
53	89706685	4	NUT, M12
54	89706690	3	NUT, CL 8, M8 x 1.25 x 13.0
55	86512446	3	BOLT, Short NK, M10 x 30, Cl8.8, Full Thd, M10x30

www.KOBMO.BY

02.02(01) AIR FILTER - MUFFLER

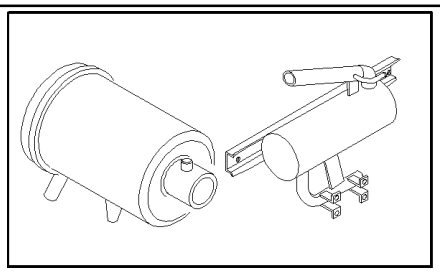

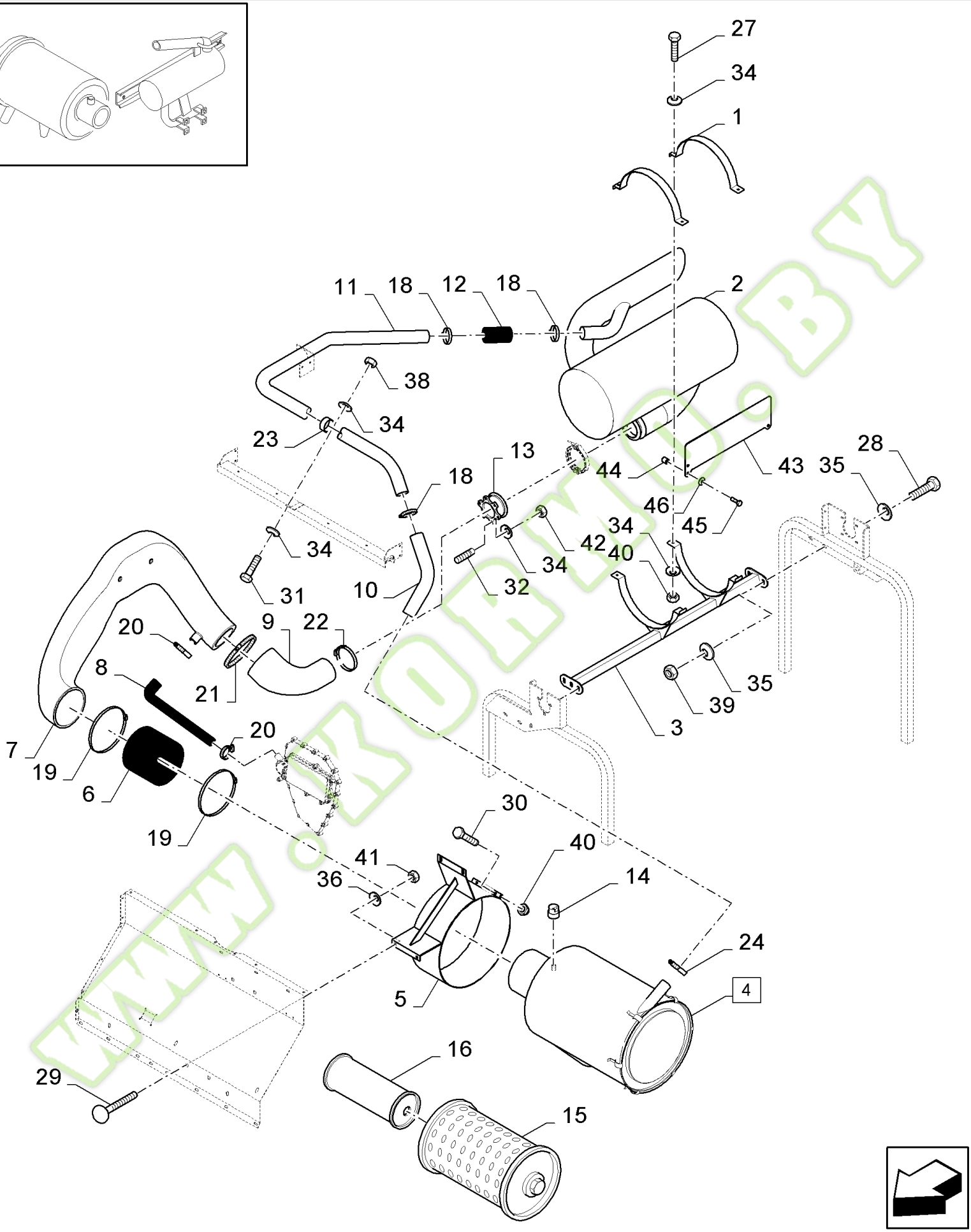

WWW.KOBMOBY

FX50 SELF-PROPELLED FORAGE HARVESTER (10/02-)

02.02(01) AIR FILTER - MUFFLER

Ref	Part Number	Qty	Description
1	84431019	2	BRACKET,
2	84989700	1	MUFFLER,
3	84431026	1	SUPPORT, , FOR FX40-50 ONLY
3	84433514	1	SUPPORT, , FOR FX30 ONLY
4	84072290	1	FILTER, AIR, (15,16)
5	84439219	1	SUPPORT,
6	84076677	1	HOSE,
7	84076361	1	TUBE,
8	84433579	1	HOSE,
9	84334710	1	ELBOW, , FOR FX40-50 ONLY
9	84989488	1	ELBOW, , FOR FX30 ONLY
10	84437676	1	ELBOW,
11	84077470	1	TUBE,
12	84011850	1	HOSE,
13	84433342	1	FLANGE, , FOR FX30 ONLY
14	84043184	1	SENDER UNIT,
15	84432503	1	FILTER, ELEMENT,
16	84432504	1	FILTER, ELEMENT,
18	556701	3	CLAMP, {PP:80556701}
19	80449815	2	CLAMP,
20	382528	2	CLAMP, {PP:80382528}
21	84012068	1	CLAMP,
22	89706924	1	CLAMP,
23	84042226	1	CLAMP,
24	360747	1	CLAMP, {PP:80360747}
27	43129	4	SCREW, {PP:80043129} Hex, M8 x 40, 8.8, Hex, M8 x 40, 8.8
28	86629541	4	BOLT, Hex, M12 x 40, 8.8, Full Thd, M12x40
29	120041	4	BOLT, {PP:80120041} Short NK, M10 x 20, Cl8.8, Full Thd, M10x20
30	86585704	2	SCREW, Cross Pan Hd, M8 x 25, M8x25
31	120106	1	SCREW, {PP:80120106} Hex, M8 x 40, 8.8, Full Thd, Hex, M8 x 40, 8.8, Full Thd
32	84031344	6	STUD, , FOR FX30 ONLY
34	322358	16	WASHER, LOCK, {PP:80322358} Belleville, M8, 8MM
35	140046	8	WASHER, LOCK, {PP:80140046} Belleville, M12, 12MM
36	140045	4	WASHER, LOCK, {PP:80140045} Belleville, M10, 10MM
38	89706690	1	NUT, CL 8, M8 x 1.25 x 13.0
39	89706685	4	NUT, M12
40	86629542	6	NUT, M8 x 1.25", Cl 8, M8
41	100016	4	NUT, {PP:80100016} M10, Cl 8, M10
42	84041352	6	NUT, M8 x 1.25, Cl8.8,
43	84447834	1	SCREEN, , FOR FX30 ONLY, ASN D278
43	84447835	1	SCREEN, , FOR FX40-50 ONLY, ASN D278
44	84448213	3	BUSHING,
45	43128	3	SCREW, {PP:80043128} Hex, M8 x 30, 8.8, M8x30
46	412650	3	WASHER, LOCK, {PP:80412650} Belleville, M8, 8MM

CATALOBMO.BY

02.04(01) AIR CIRCUIT

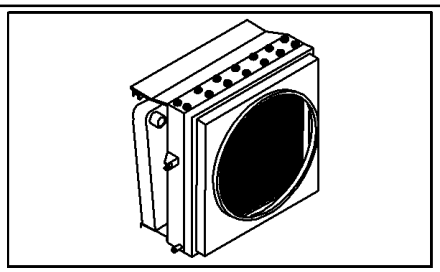

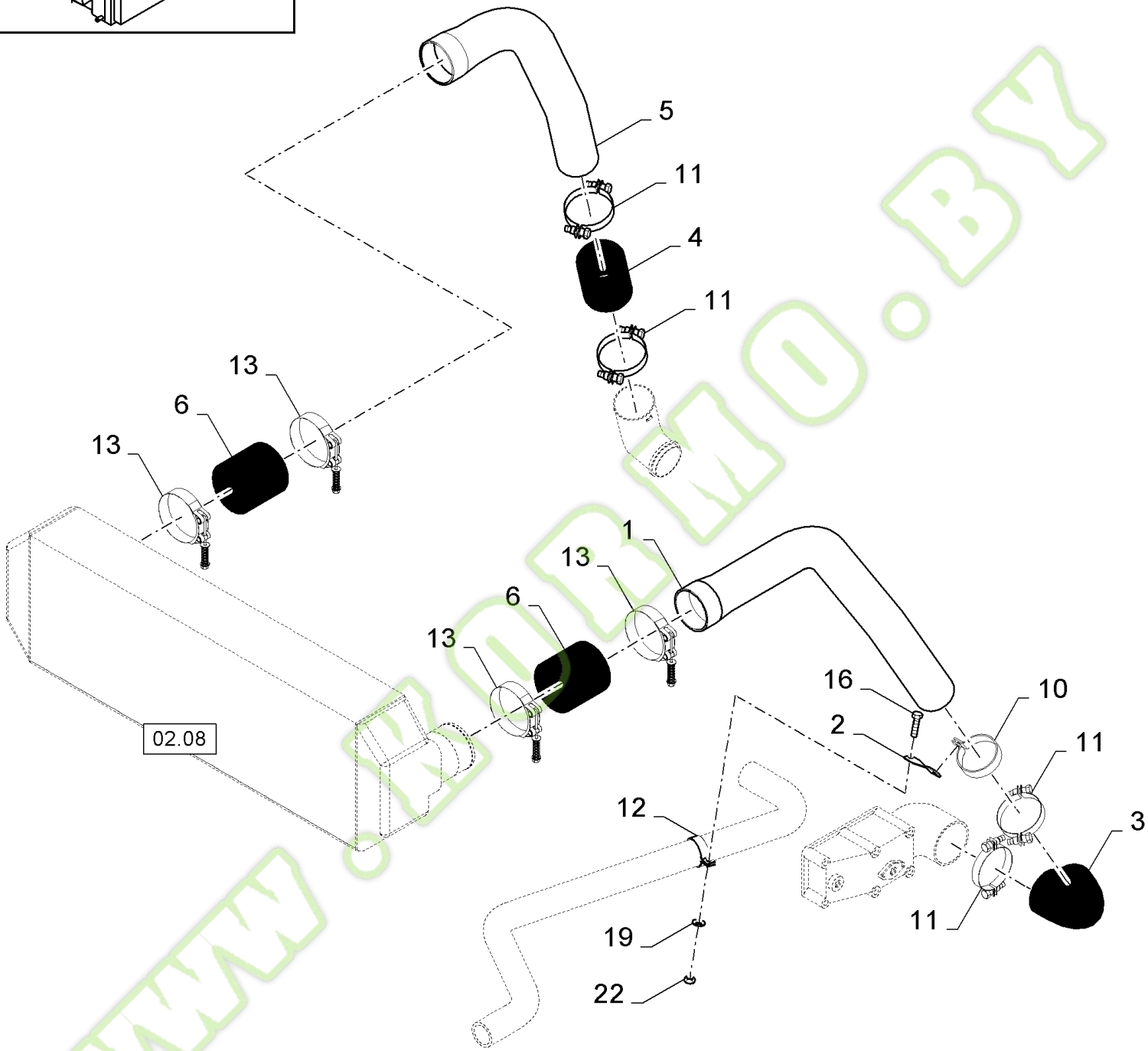

www.BORMO.BY

FX50 SELF-PROPELLED FORAGE HARVESTER (10/02-)

02.04(01) AIR CIRCUIT

Ref	Part Number	Qty	Description
1	84076868	1	TUBE,
2	84441111	1	SUPPORT,
3	84061537	1	HOSE,
4	84015286	1	TUBE,
5	84334852	1	TUBE,
6	84432666	2	HOSE,
10	84038691	1	CLAMP,
11	84021019	4	CLAMP,
12	84015625	1	CLAMP,
13	84057503	4	CLAMP,
16	120106	2	SCREW, {PP:80120106} Hex, M8 x 40, 8.8, Full Thd, Hex, M8 x 40, 8.8, Full Thd
19	322358	2	WASHER, LOCK, {PP:80322358} Belleville, M8, 8MM
22	89706690	2	NUT, CL 8, M8 x 1.25 x 13.0

www.KOBMO.BY

02.05(01) WATER CIRCUIT

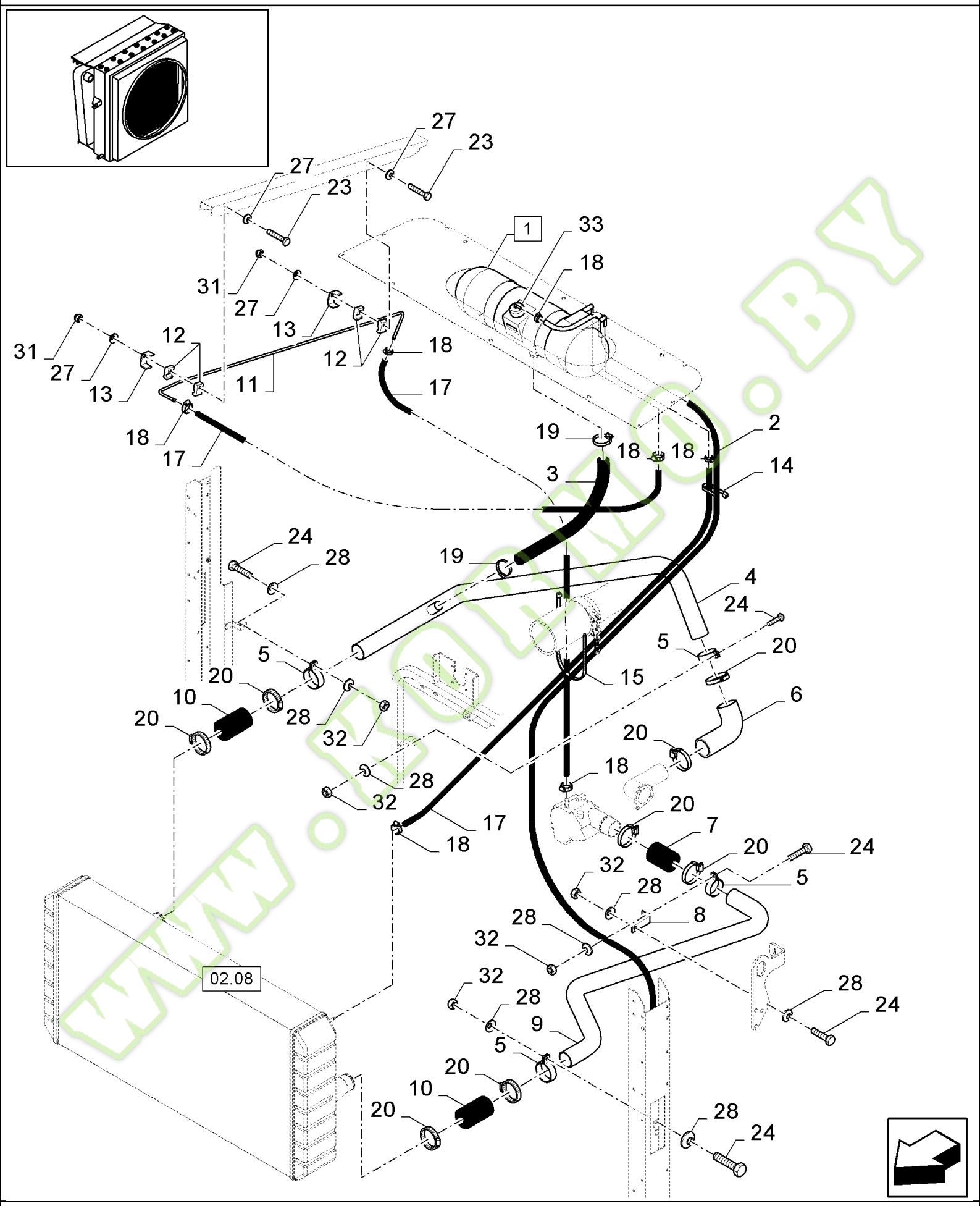

FX50 SELF-PROPELLED FORAGE HARVESTER (10/02-)

02.05(01) WATER CIRCUIT

Ref	Part Number	Qty	Description
1	84442803	1	TANK, (33)
2	398094	AR	HOSE, {PP:80398094} L=2830MM
3	84441037	1	HOSE,
4	84441038	1	TUBE, , FOR FX30 ONLY
4	84076851	1	TUBE, , FOR FX40-50 ONLY
5	84015625	4	CLAMP,
6	84035882	1	ELBOW,
7	89833673	1	HOSE,
8	84431385	1	BRACKET,
9	84076816	1	TUBE, , FOR FX30 ONLY
9	84076857	1	TUBE, , FOR FX40-50 ONLY
10	84432641	2	HOSE,
11	NS	1	NOT SERVICED, TUBE
12	433008	4	CLAMP, {PP:80433008}
13	433101	2	SUPPORT, {PP:80433101}
14	323597	1	STRAP, {PP:80323597}
15	396718	1	STRAP, {PP:80396718}
16	NS	AR	NOT SERVICED, HOSE
17	NS	AR	NOT SERVICED, HOSE
18	913888	7	CLAMP, {PP:80913888}
19	382527	2	CLAMP, {PP:80382527}
20	556701	8	CLAMP, {PP:80556701}
23	80043118	2	SCREW, Cap, HH, CL 8.8, M6 x 1 x 40
24	43128	5	SCREW, {PP:80043128} Hex, M8 x 30, 8.8, Cap, HH, CL 8.8, M8 x 1.25 x 30
27	412649	4	WASHER, LOCK, {PP:80412649} Belleville, M6, Belleville, M6
28	322358	8	WASHER, LOCK, {PP:80322358} Belleville, M8, 8MM
31	353308	2	NUT, {PP:80353308} M6 x 1, Cl 8, M6
32	89706690	5	NUT, CL 8, M8 x 1.25 x 13.0
33	84072957	1	CAP, (COVER)

www.KOBMO.BY

02.06(01) RADIATOR AND INTERCOOLER

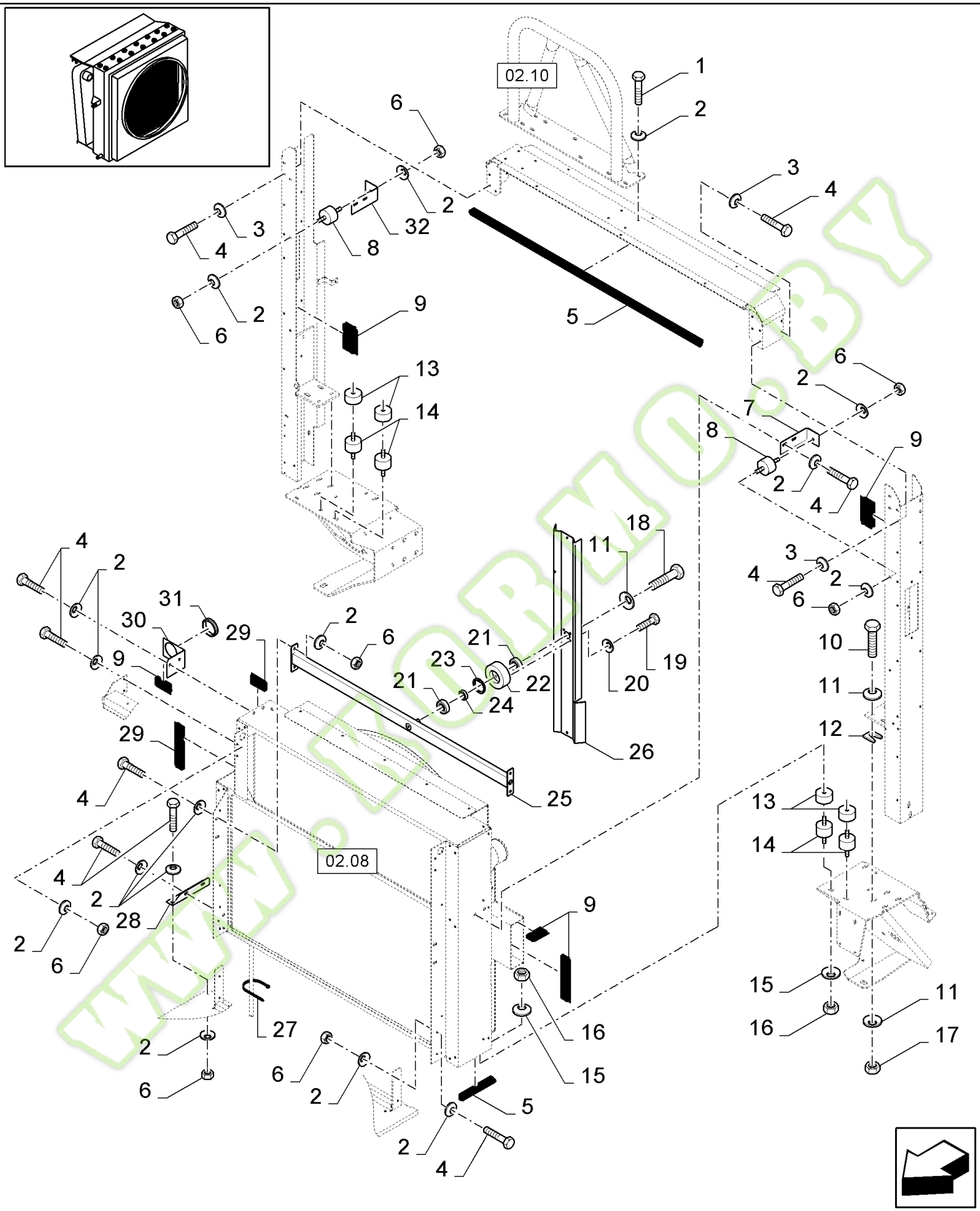

www.KOBMOB.BY

FX50 SELF-PROPELLED FORAGE HARVESTER (10/02-)

02.06(01) RADIATOR AND INTERCOOLER

Ref	Part Number	Qty	Description
1	43127	AR	BOLT, {PP:80043127} Hex, M8 x 25, 8.8, Cap, HH, CL 8.8, M8 x 1.25 x 25
2	322358	AR	WASHER, LOCK, {PP:80322358} Belleville, M8, 8MM
3	412654	AR	WASHER, LOCK, {PP:80412654} 8MM
4	80120104	AR	SCREW, M8x20
5	84056063	AR	SEAL PROTECTION, 6M
6	89706690	AR	NUT, CL 8, M8 x 1.25 x 13.0
7	84435763	1	BRACKET,
8	84057804	2	DAMPER,
9	9838333	AR	ELEMENT, SEALING, {PP:89838333} 4M
10	43140	AR	BOLT, {PP:80043140} Hex, M10 x 30, 8.8, M10x30
11	140045	AR	WASHER, LOCK, {PP:80140045} Belleville, M10, 10MM
12	481489	AR	PLATE, ADJUSTING, {PP:80481489}
13	89850749	4	CAP, FLANGE COVER,
14	89850744	4	DAMPER,
15	140046	AR	WASHER, LOCK, {PP:80140046} Belleville, M12, 12MM
16	330327	AR	NUT, {PP:80330327} M12 x 1.25", Cl 8, M12x1.5
17	100016	AR	NUT, {PP:80100016} M10, Cl 8, M10
18	43138	AR	SCREW, {PP:80043138} Hex, M10 x 20, 8.8, Full Thd, M10x20
19	86508568	AR	SCREW, Hex, M6 x 16, 8.8, M6x16
20	322357	AR	WASHER, LOCK, {PP:80322357} Belleville, M6, Belleville, M6
21	86629503	2	BEARING, BALL,
22	84437613	1	BUSHING,
23	80300642	1	CIRCLIP,
24	84334251	1	WASHER,
25	84432999	1	SUPPORT,
26	84439094	1	BLADE, TILLAGE,
27	323597	1	STRAP, {PP:80323597}
28	84437619	1	PLATE,
29	84056062	AR	SEAL PROTECTION, 6M
30	84432887	1	PLATE,
31	451556	AR	HOSE, {PP:80451556} 0.5M
32	84435765	1	BRACKET,

www.KOBMO.BY

02.07(01) RADIATOR AND INTERCOOLER

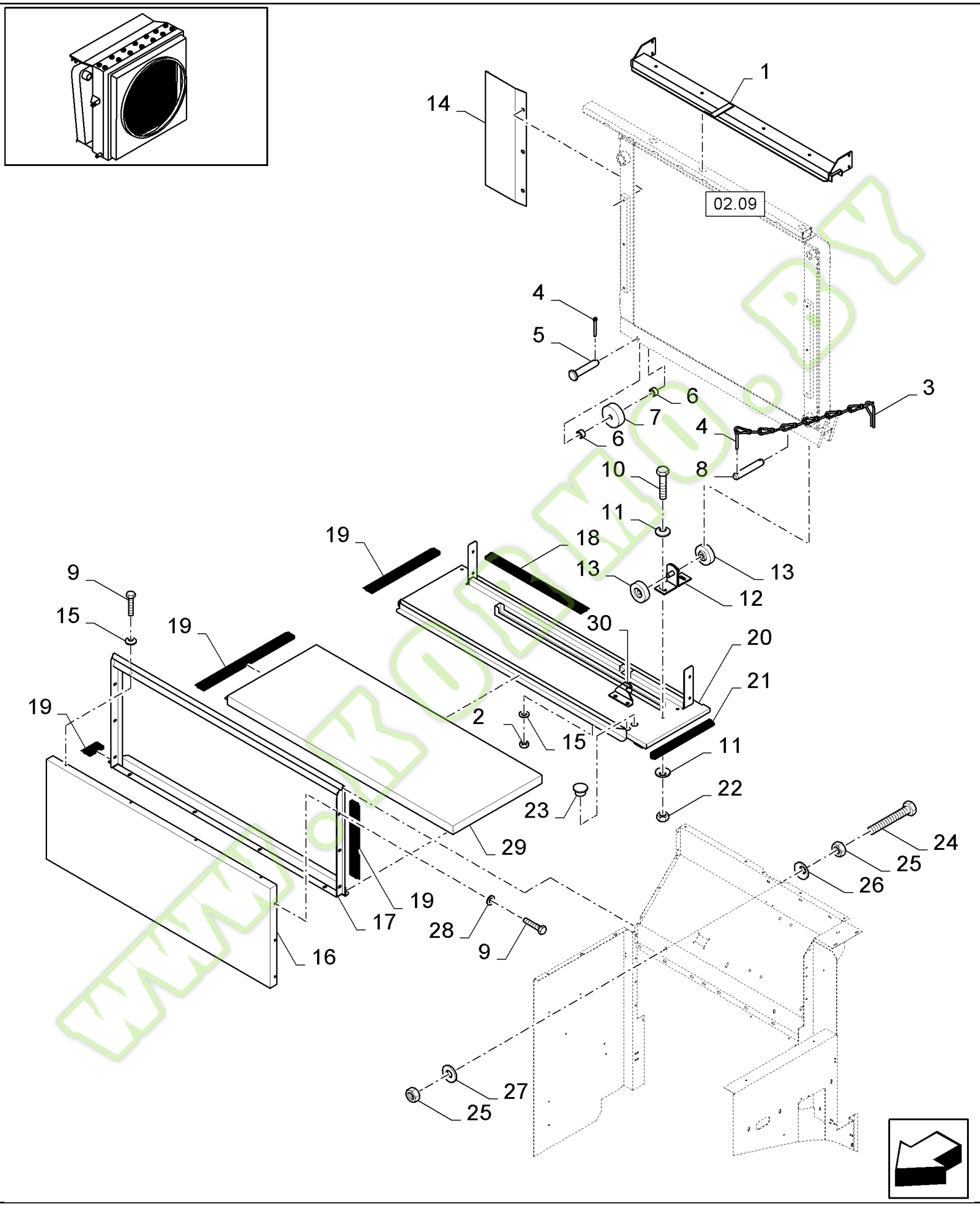

www.KOBMOD.BY

FX50 SELF-PROPELLED FORAGE HARVESTER (10/02-)

02.07(01) RADIATOR AND INTERCOOLER

Ref	Part Number	Qty	Description
1	84434987	1	PROFILE, , BSN C273
1	84446982	1	PROFILE, , ASN D274
2	353308	AR	NUT, {PP:80353308} M6 x 1, Cl 8, M6
3	370539	1	PIN, SPLIT (COTTER), {PP:80370539} , BSN C273
4	130004	AR	PIN, SPLIT (COTTER), {PP:80130004} M3.2 x 25,
5	84018348	1	PIN, CLEVIS,
6	84015622	2	BUSHING,
7	84005506	1	ROLLER,
8	84442677	1	PIN, , BSN C273
9	80378056	AR	SCREW, M6x10
10	80120104	AR	SCREW, M8x20
11	322358	AR	WASHER, LOCK, {PP:80322358} Belleville, M8, 8MM
12	84442797	1	PIN,
13	84442782	2	ROLLER,
14	84441437	1	PLATE,
15	322357	AR	WASHER, LOCK, {PP:80322357} Belleville, M6, Belleville, M6
16	84439830	1	PLATE,
17	84439847	1	FRAME,
18	9838333	AR	ELEMENT, SEALING, {PP:89838333} 4M
19	84056062	AR	SEAL PROTECTION, 6M
20	84441532	1	PLATE,
21	84056063	AR	SEAL PROTECTION, 6M
22	89706690	AR	NUT, CL 8, M8 x 1.25 x 13.0
23	433314	2	PLUG, {PP:80433314}
24	120070	AR	BOLT, {PP:80120070} Hex, M10 x 60, 8.8, M10x60
25	100016	AR	NUT, {PP:80100016} M10, Cl 8, M10
26	140045	AR	WASHER, LOCK, {PP:80140045} Belleville, M10, 10MM
27	140042	AR	WASHER, LOCK, {PP:80140042} M10 x 34 x 3, 10MM
28	412649	AR	WASHER, LOCK, {PP:80412649} Belleville, M6, Belleville, M6
29	84440622	1	PLATE,
30	84447111	1	HOOK,

www.NORMO.BY

02.08(01) RADIATOR AND INTERCOOLER

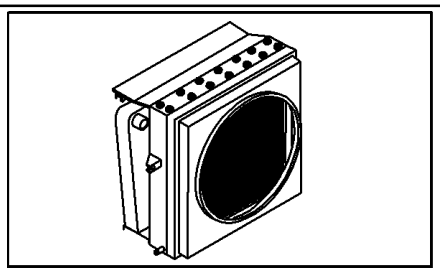

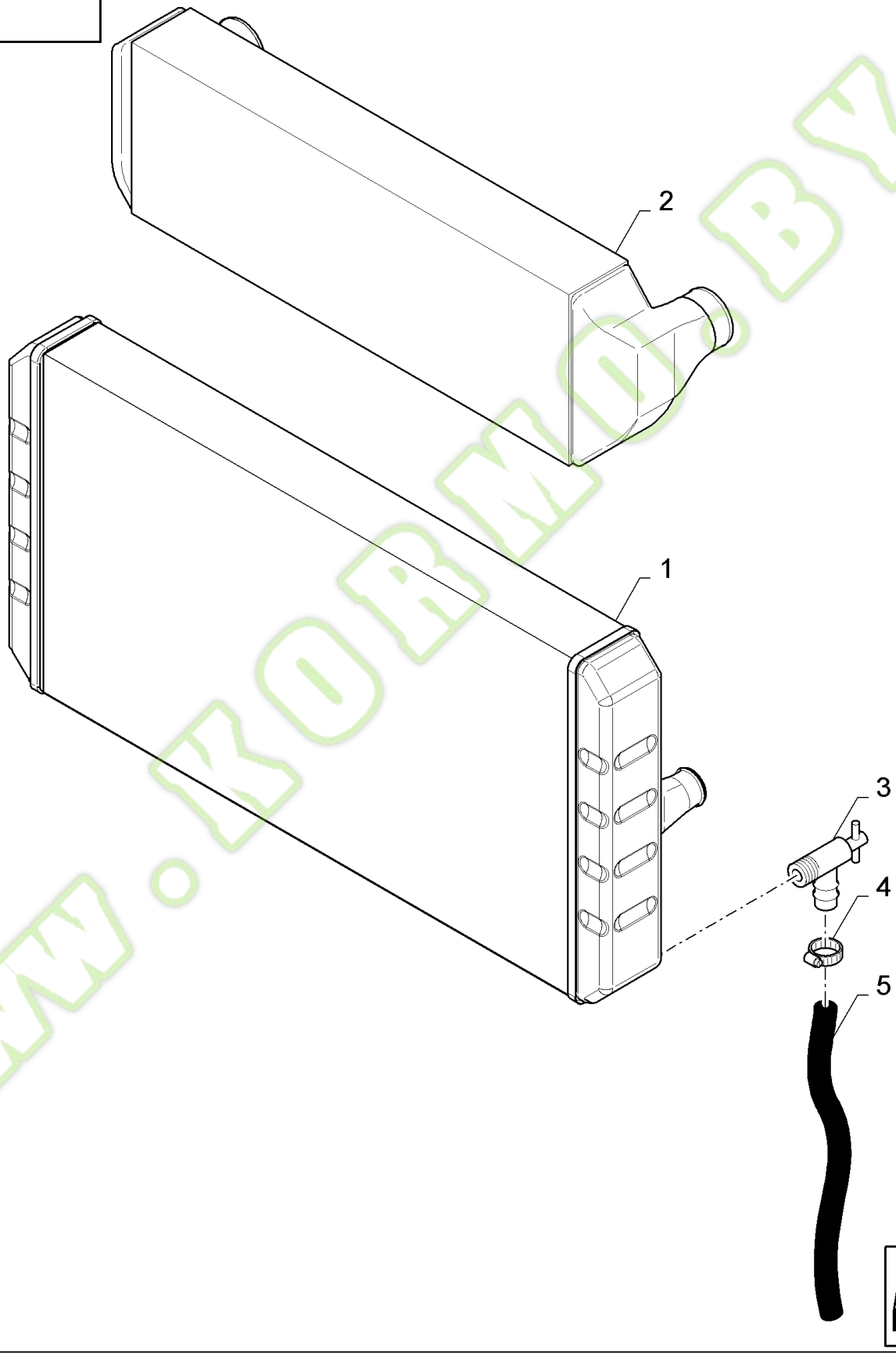

www.KOBMOB.BY

FX50 SELF-PROPELLED FORAGE HARVESTER (10/02-)

02.08(01) RADIATOR AND INTERCOOLER

Ref	Part Number	Qty	Description
1	84437772	1	RADIATOR,
2	84437773	1	INTERCOOLER,
3	441031	1	DRAINCOCK/TAP, SUPPLY, {PP:80441031}
4	913888	1	CLAMP, {PP:80913888}
5	398094	1	HOSE, {PP:80398094} L=2830MM

WWW.KOBMO.BY

02.09(01) OIL AND FUEL COOLER & CONDENSOR

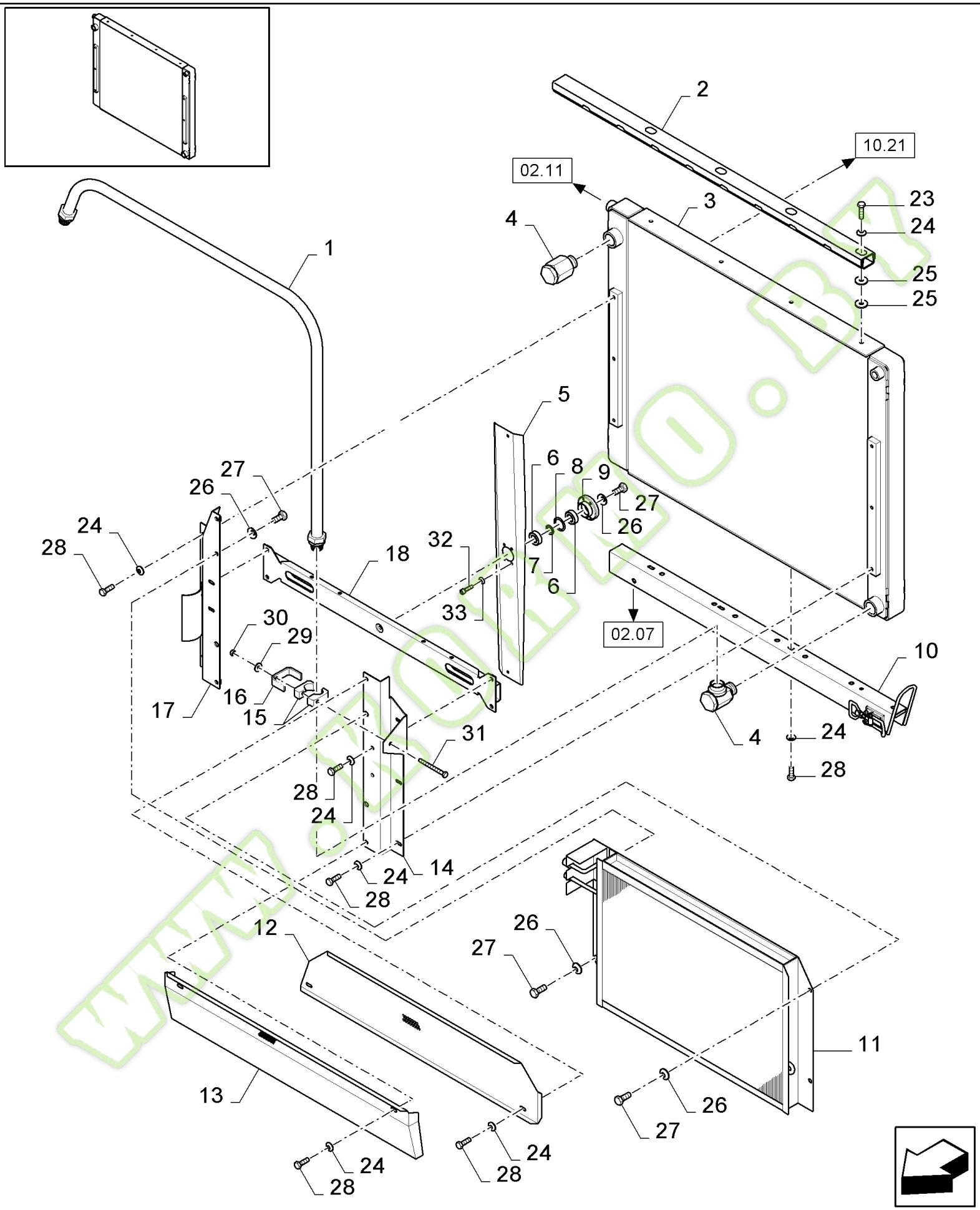

FX50 SELF-PROPELLED FORAGE HARVESTER (10/02-)

02.09(01) OIL AND FUEL COOLER & CONDENSOR

Ref	Part Number	Qty	Description
1	84439189	1	TUBE, HYD,
2	84439008	1	PROFILE, , BSN C237
2	84446896	1	PROFILE, , ASN D274
3	84433638	1	RADIATOR,
4	84058417	2	CONNECTOR, HYD.,
5	84440492	1	BLADE,
6	86629503	2	BEARING, BALL,
7	84334251	1	WASHER,
8	80300642	1	CIRCLIP,
9	84057276	1	BUSHING,
10	84439035	1	FRAME, , BSN C237
10	84447105	1	FRAME, , ASN D274
11	84007881	1	CONDENSER,
12	84440405	1	MESH,
13	84440402	1	MESH,
14	84440472	1	SUPPORT,
15	457546	2	CLAMP, {PP:80457546}
16	743318	1	SUPPORT, {PP:80743318}
17	84440470	1	SUPPORT,
18	84441211	1	SUPPORT,
23	80120104	4	SCREW, M8x20
24	322358	22	WASHER, LOCK, {PP:80322358} Belleville, M8, 8MM
25	140041	8	WASHER, {PP:80140041} M8 x 28 x 3,
26	140045	5	WASHER, LOCK, {PP:80140045} Belleville, M10,
27	80300383	5	SCREW, M10x16
29	86588450	1	WASHER, M6,
30	353308	1	NUT, {PP:80353308} M6 x 1, Cl 8, M6
31	338413	1	SCREW, {PP:80338413} Hex, M6 x 60, 8.8, M6x60
32	84058583	4	SCREW, M6x16
33	412653	4	WASHER, LOCK, {PP:80412653} Belleville, M6, Belleville, M6
28	16043224	18	SCREW, Hex, M8 x 16, 8.8, Full Thd, M8x16

www.NORMO.BY

02.10(01) RADIATOR, SUPPORTS

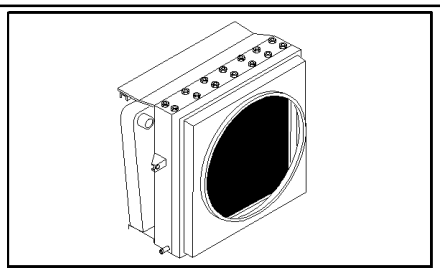

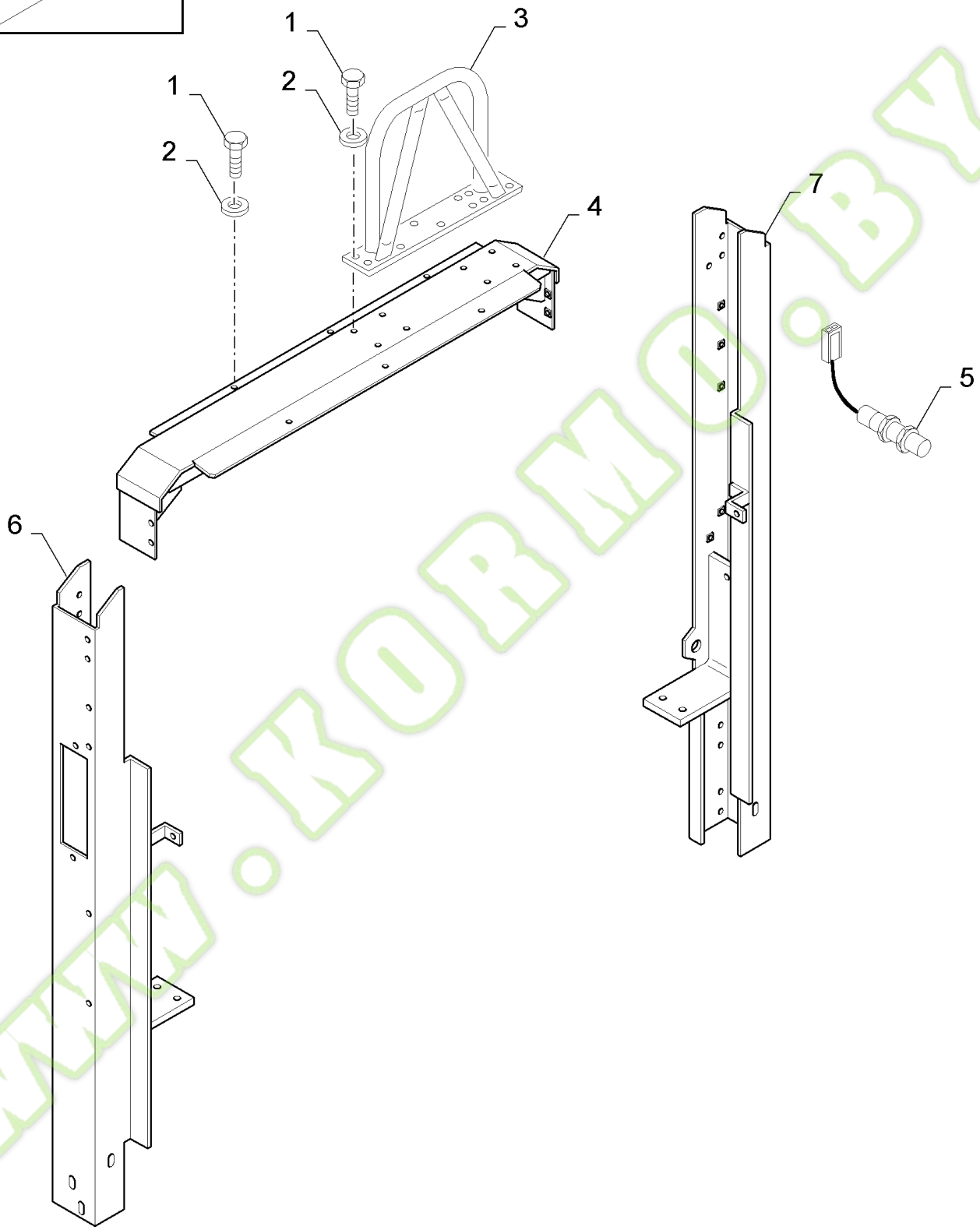

www.KOBMO.BY

FX50 SELF-PROPELLED FORAGE HARVESTER (10/02-)

02.10(01) RADIATOR, SUPPORTS

Ref	Part Number	Qty	Description
1	43127	AR	BOLT, {PP:80043127} Hex, M8 x 25, 8.8, M8x25
2	322356	AR	WASHER, LOCK, {PP:80322356} 8MM
3	84038240	1	SUPPORT,
4	84334031	1	CROSSRAIL,
5	84056994	1	SENSOR,
6	84334037	1	SUPPORT, LH
7	84334066	1	SUPPORT, RH

www.KOBMO.BY

02.11(01) FUEL TANK

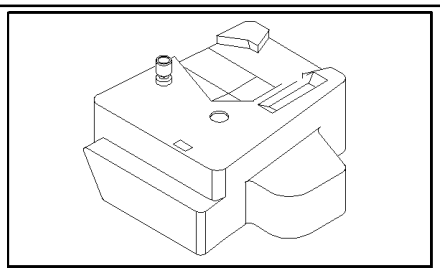

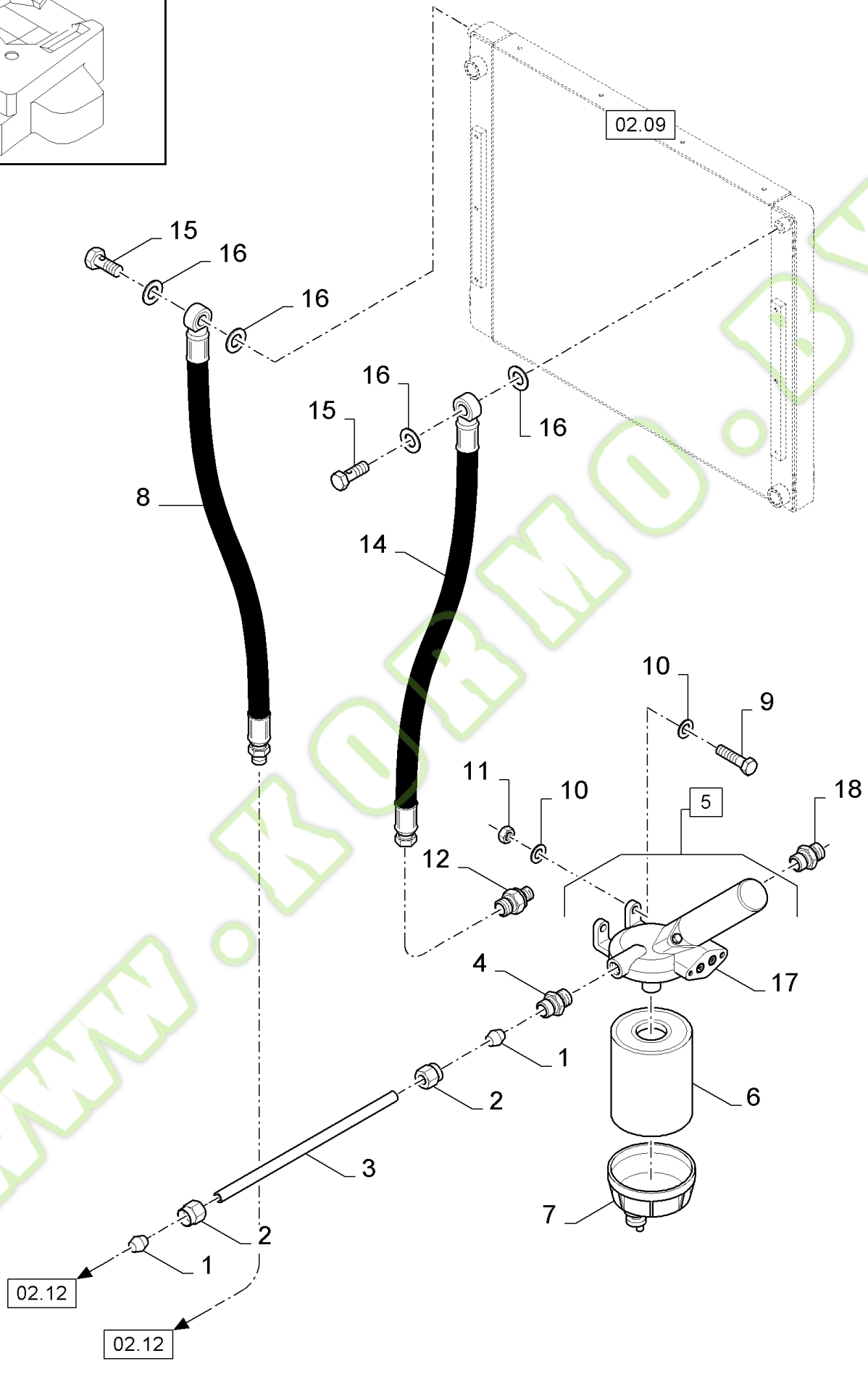

www.KOBMO.BY

FX50 SELF-PROPELLED FORAGE HARVESTER (10/02-)

02.11(01) FUEL TANK

Ref	Part Number	Qty	Description
1	150015	AR	FERRULE, {PP:80150015} 12MM
2	86548976	AR	NUT, M12
3	9513719	AR	TUBE, RIGID, {PP:89513719} D=12MMx1.5, L=2M
4	84057160	1	CONNECTOR, HYD.,
5	84444337	1	FILTER, FUEL, (6,7), CONTACT YOUR LOCAL CATERPILLAR DEALER FOR ORDERING HAND PUMP PARTS
6	84989840	1	FILTER, ELEMENT,
7	84431280	1	BOWL, FILTER,
8	84441870	1	HOSE,
9	43140	AR	BOLT, {PP:80043140} Hex, M10 x 30, 8.8, M10x30
10	140045	AR	WASHER, LOCK, {PP:80140045} Belleville, M10, 10MM
11	100016	AR	NUT, {PP:80100016} M10, Cl 8, M10
12	84431916	1	CONNECTOR, HYD.,
14	84441875	1	HOSE,
15	84100235	2	SCREW, HOLLOW,
16	9511034	4	GASKET, {PP:89511034}
17	NS	1	NOT SERVICED, , CONTACT YOUR LOCAL CATERPILLAR DEALER FOR ORDERING HAND PUMP PARTS
18	84021013	1	CONNECTOR, HYD.,

www.KOBMO.BY

02.12(01) FUEL TANK

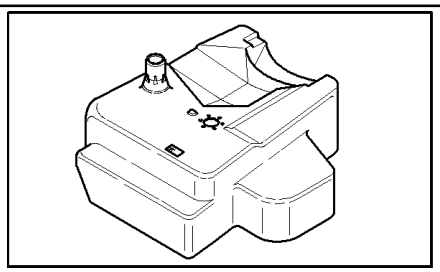

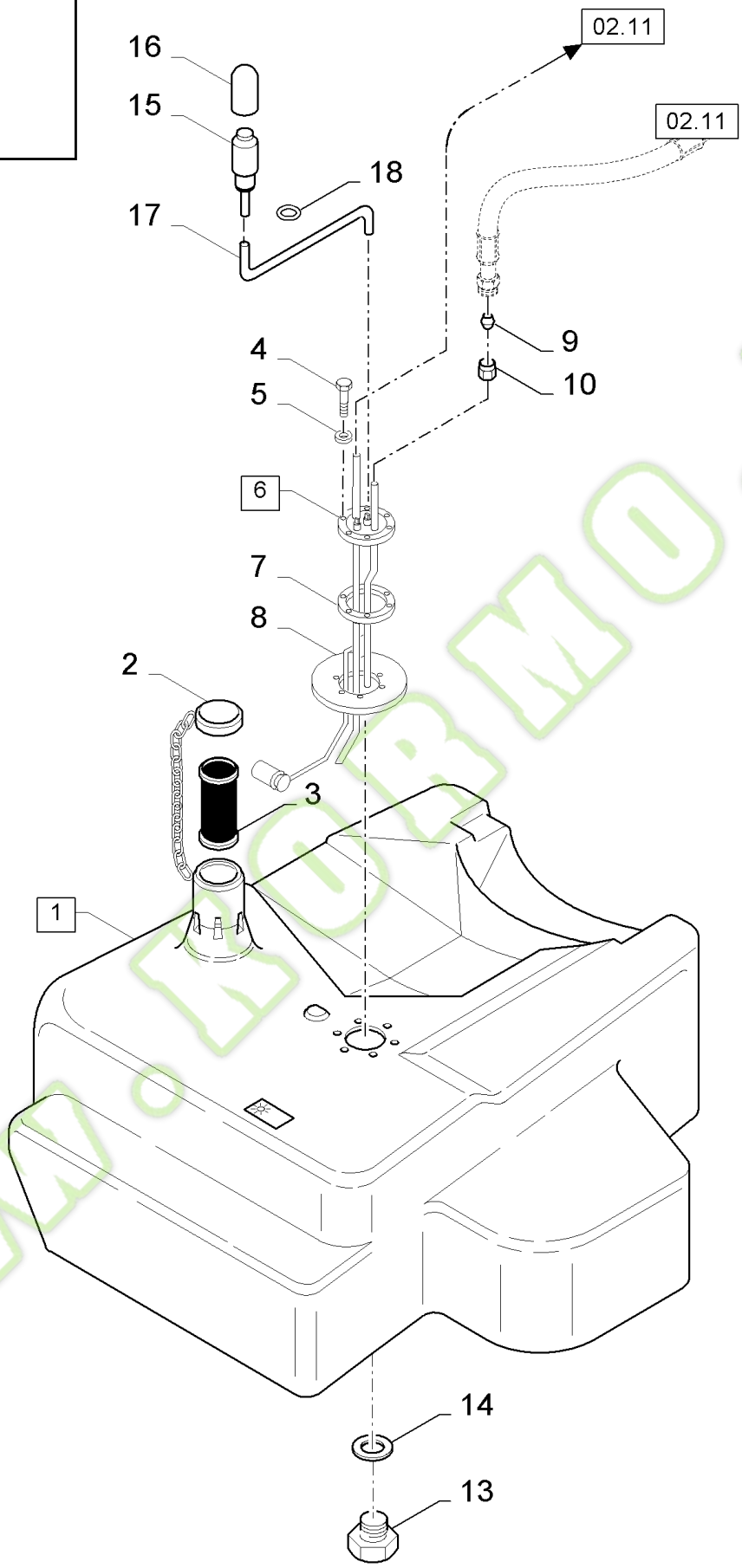

www.BOBMO.BY

FX50 SELF-PROPELLED FORAGE HARVESTER (10/02-)

02.12(01) FUEL TANK

Ref	Part Number	Qty	Description
1	84438870	1	FUEL TANK, (2,3,13,14)
2	84041999	1	CAP,
3	9501200	1	FILTER, STRAINER, {PP:89501200}
4	120098	6	SCREW, {PP:80120098} Hex, M5 x 20, 8.8, Full Thd, M5x20
5	322356	6	WASHER, LOCK, {PP:80322356} 5MM
6	84441409	1	INDICATOR, (7)
7	9832364	1	GASKET, {PP:89832364}
8	84017485	1	PLATE, COVER,
9	150015	AR	FERRULE, {PP:80150015} 12MM
10	86548976	AR	NUT, M12
13	89831262	1	PLUG, 33.2 MM DIA
13	84447024	1	PLUG, 3/4" DIA
14	89831263	1	GASKET, Use with 89831262
14	84447023	1	GASKET, Use with 84447024
15	84075498	1	VALVE, SAFETY,
16	82012157	1	PLUG,
17	398094	AR	HOSE, {PP:80398094} 2830MM
18	747410	1	GROMMET, {PP:80747410}

www.KOBMO.BY

02.13(01) FUEL TANK

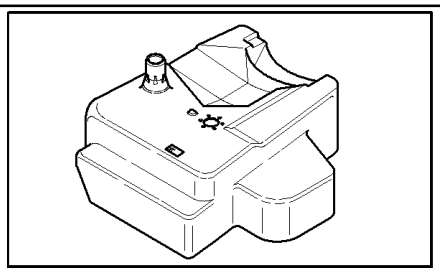

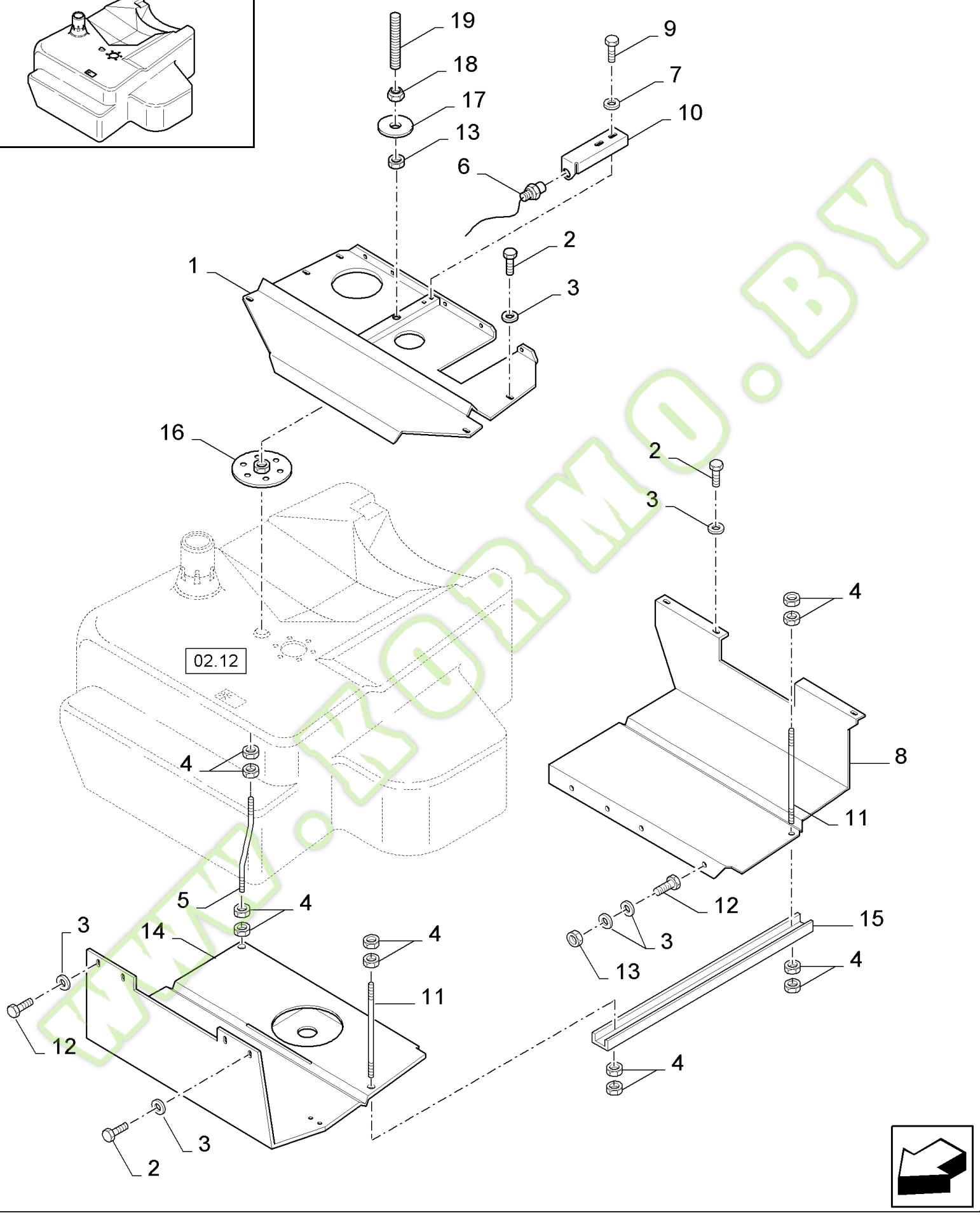

www.KOBMO.BY

FX50 SELF-PROPELLED FORAGE HARVESTER (10/02-)

02.13(01) FUEL TANK

Ref	Part Number	Qty	Description
1	84438817	1	PLATE,
2	43140	10	BOLT, {PP:80043140} Hex, M10 x 30, 8.8, M10x30
3	140045	21	WASHER, LOCK, {PP:80140045} Belleville, M10, 10MM
4	89706685	11	NUT, M12
5	84440733	1	ROD, THREADED,
6	84056994	1	SENSOR,
7	322358	2	WASHER, LOCK, {PP:80322358} Belleville, M8, 8MM
8	84440699	1	PLATE,
9	43127	2	BOLT, {PP:80043127} Hex, M8 x 25, 8.8, Cap, HH, CL 8.8, M8 x 1.25 x 25
10	84441863	1	SUPPORT,
11	84440739	2	ROD, THREADED,
12	120109	7	SCREW, {PP:80120109} Hex, M10 x 20, 8.8, Full Thd, M10x20
13	100016	AR	NUT, {PP:80100016} M10, Cl 8, M6
14	84440740	1	PLATE,
15	89593264	1	PROFILE,
16	84058574	1	DISC,
17	456935	1	WASHER, {PP:80456935}
18	100037	1	NUT, {PP:80100037} M10 x 1.5, Cl 8, M10
19	412310	1	STUD, {PP:80412310}

www.KOBMO.BY

02.14(01) HEATING

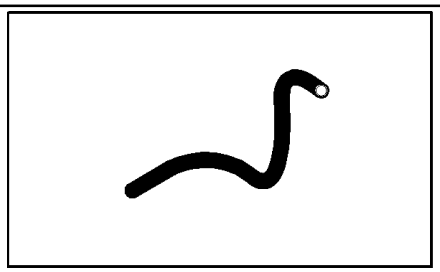

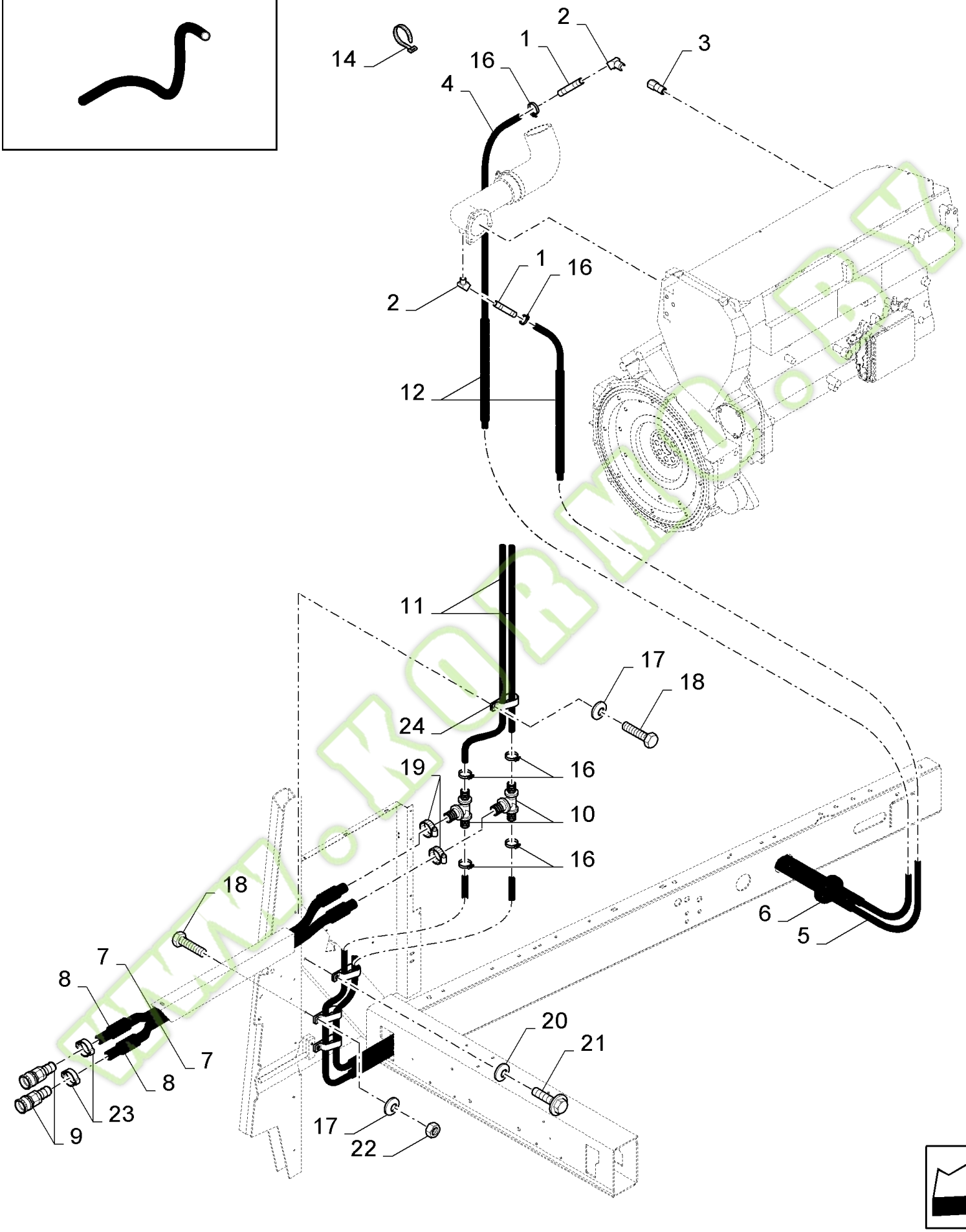

FX50 SELF-PROPELLED FORAGE HARVESTER (10/02-)

02.14(01) HEATING

Ref	Part Number	Qty	Description
1	84021074	2	TUBE,
2	353779S	2	ELBOW, {PP:83905214}
3	446806	1	CONNECTOR, HYD., {PP:80446806}
4	84434404	1	HOSE,
5	84434399	1	HOSE,
6	NSS	AR	NOT SERVICED SEPARATELY, PROTECTION
7	84058174	2	HOSE,
8	NSS	AR	NOT SERVICED SEPARATELY, PROTECTION
9	84607508	2	CONNECTOR, HYD.,
10	84057136	2	CONNECTION, 3 WAY,
11	84043021	2	HOSE,
12	NSS	AR	NOT SERVICED SEPARATELY, PROTECTION
14	84449335	1	STRAP,
16	326082	6	CLAMP, {PP:80326082}
17	322358	2	WASHER, LOCK, {PP:80322358} Belleville, M8, 8MM
18	43128	2	SCREW, {PP:80043128} Hex, M8 x 30, 8.8, Cap, HH, CL 8.8, M8 x 1.25 x 30
19	58948	2	CLAMP, {PP:80058948}
20	322357	1	WASHER, LOCK, {PP:80322357} Belleville, M6, Belleville, M6
21	80412357	1	SCREW, M6x25
22	89706690	1	NUT, M10
23	84607087	2	CLAMP,
24	9513271	4	CLAMP, {PP:89513271}

www.KOBMO.BY

02.14A(01) BLOCK HEATER

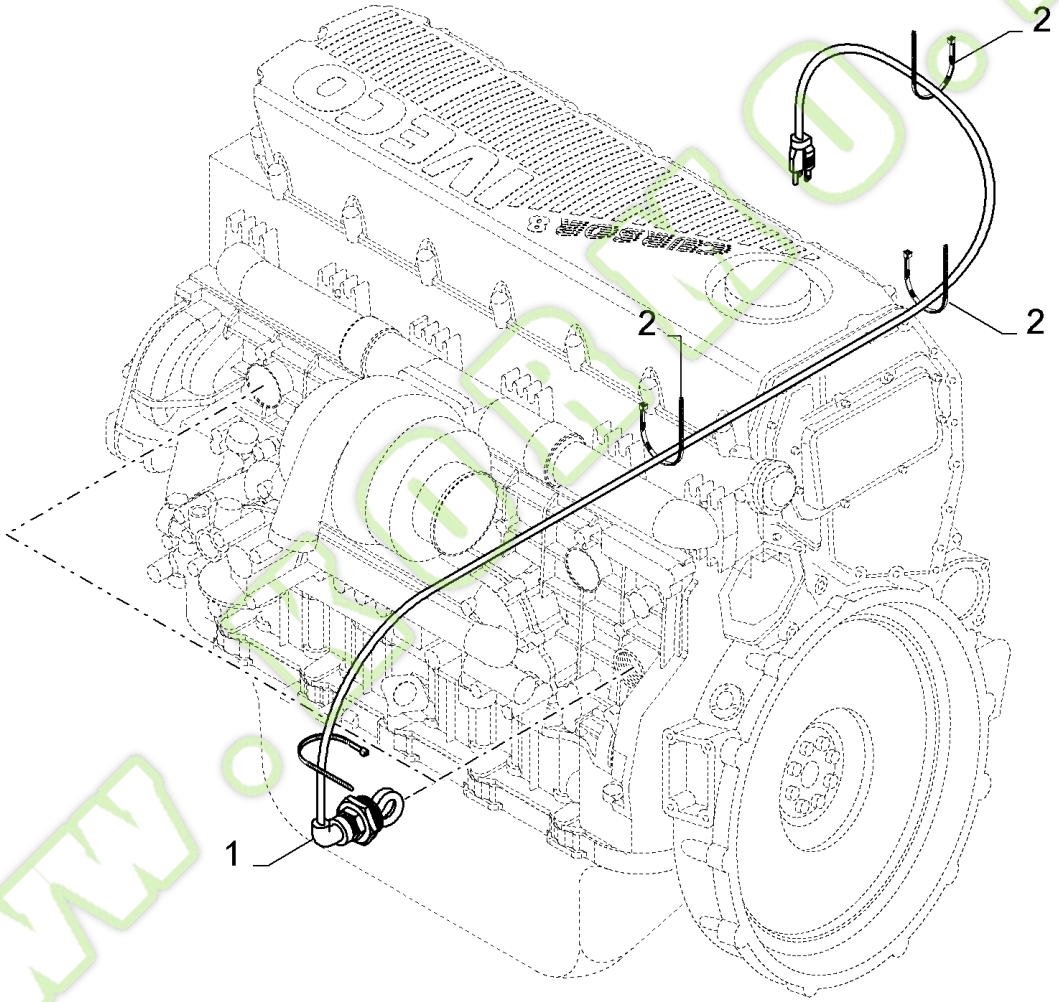

www.RETRO.BY

FX50 SELF-PROPELLED FORAGE HARVESTER (10/02-)

02.14A(01) BLOCK HEATER

Ref	Part Number	Qty	Description
1	84438888	1	HEATER,
2	86566989	1	STRAP,

www.KORMO.BY

02.16(01) ENGINE, SUPPORT

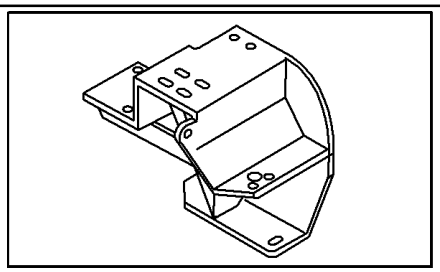

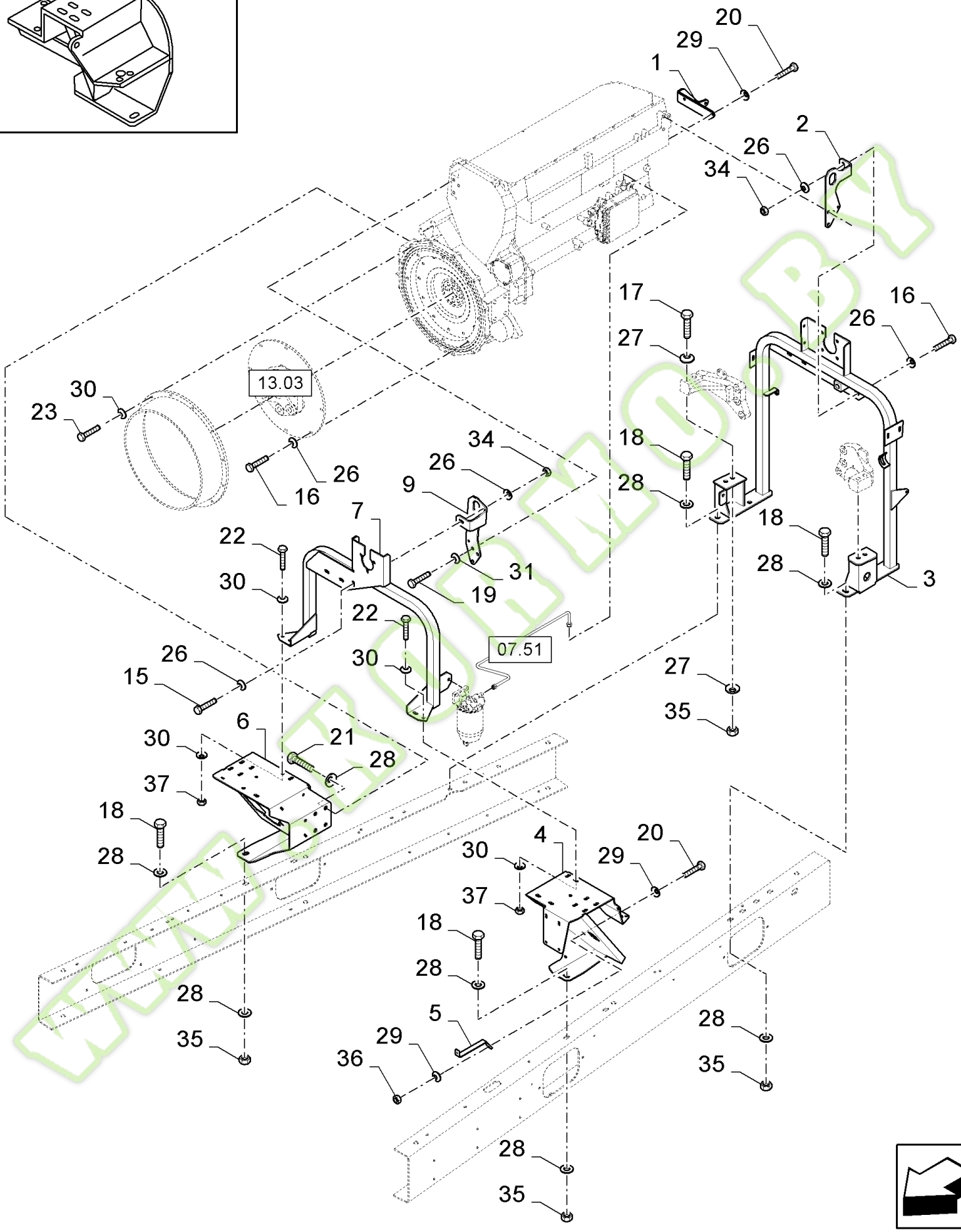

FX50 SELF-PROPELLED FORAGE HARVESTER (10/02-)

02.16(01) ENGINE, SUPPORT

Ref	Part Number	Qty	Description
1	84433244	1	SUPPORT,
2	84075369	1	SUPPORT,
3	84075641	1	SUPPORT,
4	84076652	1	SUPPORT,
5	84053454	1	BRACKET,
6	84076655	1	SUPPORT,
7	84444440	1	SUPPORT,
8	NS	AR	NOT SERVICED, TUBE 12MM
9	84075278	1	SUPPORT,
15	86629541	2	BOLT, Hex, M12 x 40, 8.8, Full Thd, M12x40
16	9706687	8	SCREW, {PP:89706687} Hex, M12 x 30, 8.8, M12x30
17	374889	4	SCREW, {PP:80374889} Hex, M16 x 100, 8.8, M16x100
18	120090	8	SCREW, {PP:80120090} Hex, M16 x 50, 8.8, Hex, M16 x 50, 8.8
19	412677	3	BOLT, {PP:80412677} Hex, M12 x 30, 12.9, Full Thd, M12x30
20	80120104	3	SCREW, M8x20
21	43168	8	SCREW, {PP:80043168} Hex, M16 x 40, 8.8, Hex, M16 x 40, 8.8
22	43140	4	BOLT, {PP:80043140} Hex, M10 x 30, 8.8, M10x30
23	120068	12	SCREW, {PP:80120068} Hex, M10 x 40, 8.8, Full Thd, M10x40
26	140046	12	WASHER, LOCK, {PP:80140046} Belleville, M12, 12MM
27	140048	8	WASHER, LOCK, {PP:80140048} Belleville, M16, 16MM
28	86592702	22	WASHER, M16 x 45 x 6, HT, 16MM
29	322358	4	WASHER, LOCK, {PP:80322358} Belleville, M8, 8MM
30	140045	20	WASHER, LOCK, {PP:80140045} Belleville, M10, 10MM
31	86592701	3	WASHER, M12 x 35 x 5, HT, 12MM
34	89706685	2	NUT, M12
35	100020	10	NUT, {PP:80100020} M16, Cl 8, M16, Cl 8
36	89706690	1	NUT, CL 8, M8 x 1.25 x 13.0
37	100016	4	NUT, {PP:80100016} M10, Cl 8, M10

www.kubota.by

TRANSMISSION	**TRANSMISSION**	**TRANSMISION**	**TRANSMISSION**
TRANSMISSION	**TRANSMISSION**	**TRANSMISSÃO**	**TRANSMISSIE**

SEC. 3

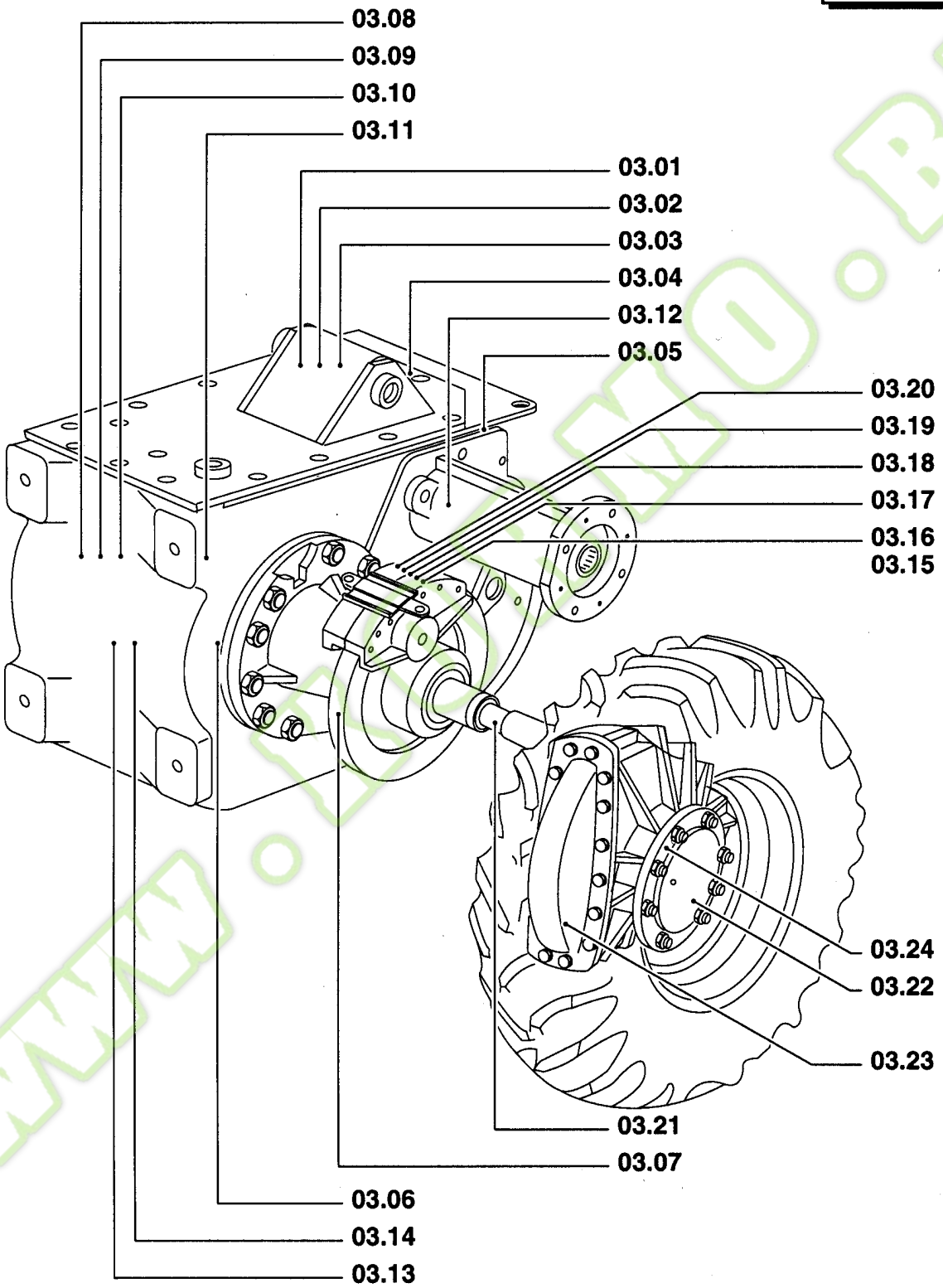

www.EMO.BY

03.000(01) SECTION LIST 3

Ref	Part Number	Qty	Description

www.KOBMO.BY

03.01(01) GEARSHIFT CONTROLS

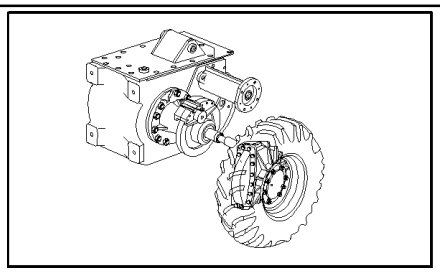

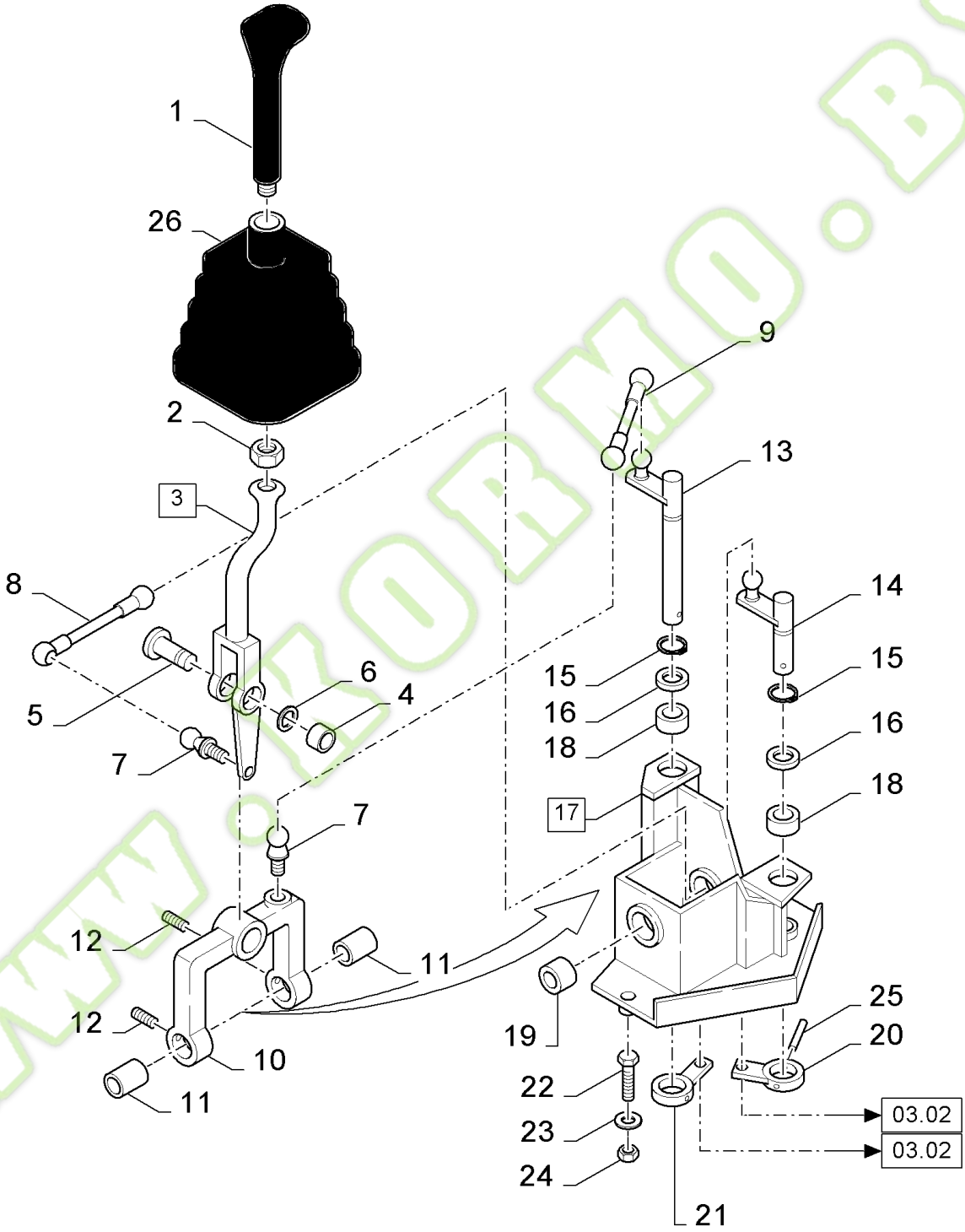

www.ROBMO.BY

FX50 SELF-PROPELLED FORAGE HARVESTER (10/02-)

03.01(01) GEARSHIFT CONTROLS

Ref	Part Number	Qty	Description
1	445968	1	LEVER, {PP:80445968}
2	379752	1	NUT, {PP:80379752} M12 x 1.25", Cl 10, M12
3	9819631	1	LEVER, {PP:89819631} (4)
4	420761	2	BUSHING, {PP:80420761}
5	9831112	1	PIN, {PP:89831112}
6	370024	1	RING, SNAP, {PP:80370024}
7	9831211	2	JOINT, UNIVERSAL, {PP:89831211}
8	9831206	1	ROD, ADJUSTMENT, {PP:89831206}
9	9831207	1	ROD, ADJUSTMENT, {PP:89831207}
10	9819650	1	LEVER, {PP:89819650}
11	9831111	2	BUSHING, {PP:89831111}
12	300480	2	SCREW, {PP:80300480} Hex Soc, M10 x 12, Cup Pt, M10x12
13	9831096	1	SHAFT, {PP:89831096}
14	84007010	1	PIN,
15	80370002	2	CIRCLIP,
16	140022	2	WASHER, {PP:80140022} M24 x 44 x 4, 24MM
17	84001390	1	SUPPORT, (18,19)
18	382975	4	BUSHING, {PP:80382975}
19	9505633	2	BUSHING, {PP:89505633}
20	84007008	1	LEVER,
21	84007012	1	LEVER,
22	120059	4	SCREW, {PP:80120059} Hex, M8 x 40, 8.8, Hex, M8 x 40, 8.8
23	322358	4	WASHER, LOCK, {PP:80322358} Belleville, M8, 8MM
24	89706690	4	NUT, CL 8, M8 x 1.25 x 13.0
25	300869	2	PIN, {PP:80300869} M6 x 40, Slotted, M6 x 40, Slotted
26	9819436	1	BELLOWS, {PP:89819436}

www.KUBMO.BY

03.02(01) GEARSHIFT CONTROLS

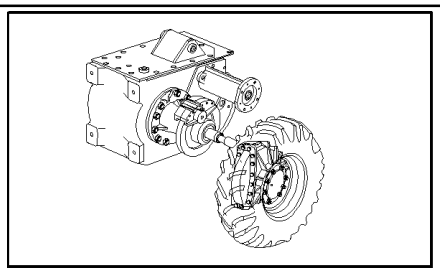

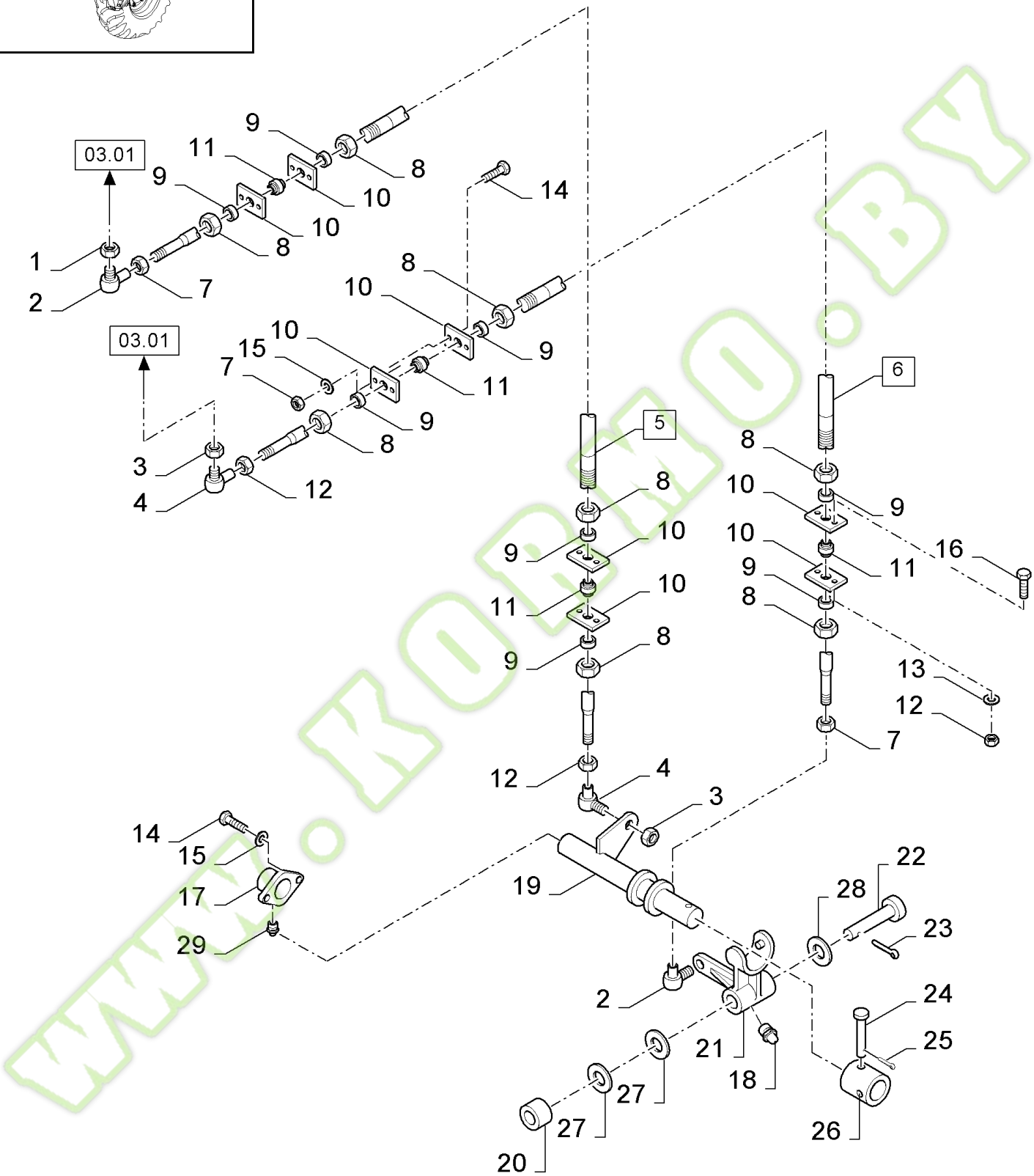

www.KORMO.BY

FX50 SELF-PROPELLED FORAGE HARVESTER (10/02-)

03.02(01) GEARSHIFT CONTROLS

Ref	Part Number	Qty	Description
1	100067	1	NUT, {PP:80100067} M8 x 1.25", Cl 8, M8
2	412439	2	BALL JOINT, {PP:80412439}
3	353308	2	NUT, {PP:80353308} M6 x 1, Cl 8, M6
4	84021043	2	BALL JOINT,
5	89837076	1	CABLE, (8 to 12)
6	89837077	1	CABLE, (7 to 11)
7	89706690	4	NUT, CL 8, M8 x 1.25 x 13.0
8	379752	8	NUT, {PP:80379752} M12 x 1.25", Cl 10, M12x1.25
9	750159	8	RING, {PP:80750159}
10	NS	8	NOT SERVICED,
11	750158	4	BALL JOINT, {PP:80750158}
12	9706755	10	NUT, {PP:89706755} M6, Cl 8, M6
13	322357	8	WASHER, LOCK, {PP:80322357} Belleville, M6, Belleville, M6
14	43128	4	SCREW, {PP:80043128} Hex, M8 x 30, 8.8, Cap, HH, CL 8.8, M8 x 1.25 x 30
15	322358	4	WASHER, LOCK, {PP:80322358} Belleville, M8, 8MM
16	86977786	8	BOLT, Hex, M6 x 25, 8.8, M6x20
17	84807154	1	HOUSING, BEARING,
18	321204	1	NIPPLE, LUBE, {PP:80321204}
19	89837041	1	SPINDLE,
20	325595	1	SPACER, {PP:80325595}
21	84807152	1	LEVER,
22	84021067	1	PIN,
23	130012	1	PIN, SPLIT (COTTER), {PP:80130012} M5 x 50,
24	353216	2	PIN, {PP:80353216}
25	9512667	2	PIN, SPLIT (COTTER), {PP:89512667} M6.3 x 40,
26	9832366	1	BUSHING, {PP:89832366}
27	443434	AR	WASHER, {PP:80443434}
28	80140096	AR	WASHER,
29	323787	1	NIPPLE, LUBE, {PP:80323787}

www.KORMO.BY

03.03(01) GEARBOX

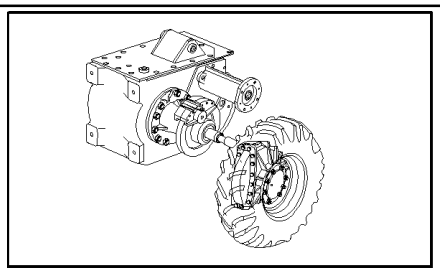

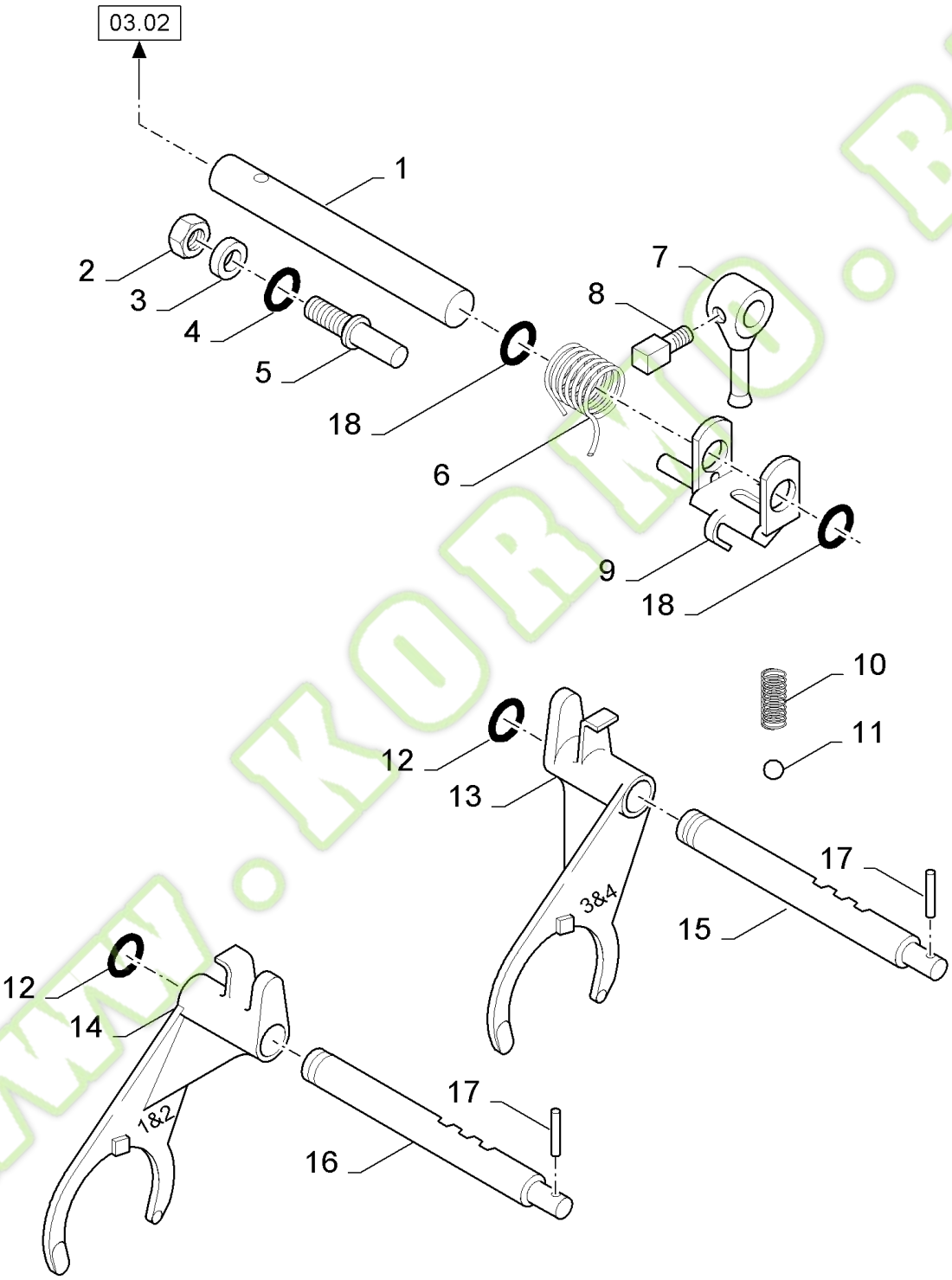

www.KORMO.BY

FX50 SELF-PROPELLED FORAGE HARVESTER (10/02-)

03.03(01) GEARBOX

Ref	Part Number	Qty	Description
1	9814644	1	SHAFT, {PP:89814644}
2	86629542	1	NUT, M8 x 1.25", Cl 8, M8
3	9812123	1	BUSHING, {PP:89812123}
4	220085	1	O-RING, {PP:80220085}
5	84004167	1	PIN,
6	84005379	1	SPRING,
7	9831136	1	LEVER, {PP:89831136}
8	84814899	1	SCREW, Hex Soc, M10 x 18, M10x18
9	9831133	1	HINGE, {PP:89831133}
10	9833067	2	SPRING, {PP:89833067}
11	210006	2	BALL, {PP:80210006}
12	129979	2	O-RING, {PP:80129979} -115, 70 Duro, .674" ID x .103" Thk,
13	84031890	1	YOKE,
14	421477	1	FORK, {PP:80421477}
15	440784	1	SHAFT, {PP:80440784}
16	436422	1	SHAFT, {PP:80436422}
17	300872	2	PIN, ROLL, {PP:80300872} M8 x 36, Slotted,
18	86629540	2	O-RING, -214, 70 Duro, .984" ID x .139" Thk,

www.KOBMO.BY

03.04(01) GEARBOX

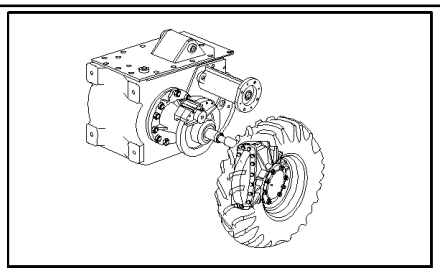

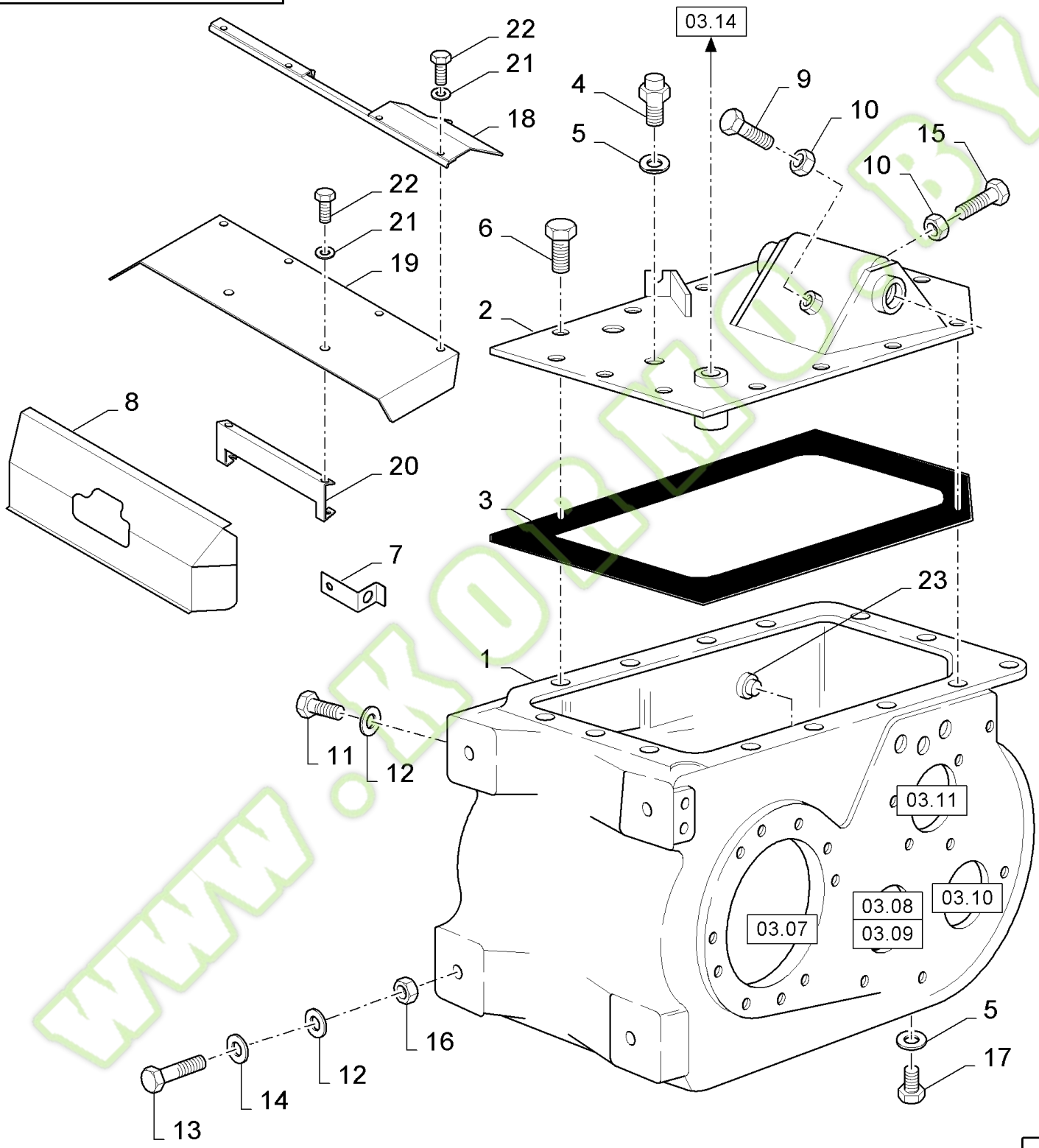

www.KOBMOBY

FX50 SELF-PROPELLED FORAGE HARVESTER (10/02-)

03.04(01) GEARBOX

Ref	Part Number	Qty	Description
1	84807182	1	HOUSING,
2	84015354	1	COVER,
3	430783	1	GASKET, {PP:80430783}
4	398136	1	BREATHER, {PP:80398136}
5	220025	1	GASKET, {PP:80220025}
6	412621	13	SCREW, {PP:80412621} Hex Lock, M10 x 30, 8.8, M10x30
7	84438290	1	SUPPORT,
8	84438441	1	PLATE, , BSN C277
8	84448351	1	PLATE, , BSN F278285
8	84449179	1	PLATE, , ASN D286
9	120112	2	SCREW, {PP:80120112} Hex, M10 x 40, 8.8, Full Thd, M10x40
10	100016	2	NUT, {PP:80100016} M10, Cl 8, M10
11	120090	4	SCREW, {PP:80120090} Hex, M16 x 50, 8.8, Hex, M16 x 50, 8.8
12	394631	6	WASHER, {PP:80394631} 16MM
13	455447	2	BOLT, {PP:80455447}
14	455446	2	WASHER, {PP:80455446}
15	120115	1	SCREW, {PP:80120115} Hex, M10 x 70, 8.8, Full Thd, M10x70
16	100020	2	NUT, {PP:80100020} M16, Cl 8, M16, Cl 8
17	336897	1	PLUG, {PP:80336897} Magnetic
18	84807186	1	SUPPORT,
19	84438282	1	PLATE, , BSN C277
19	84448192	1	COVER, , BSN F278285
19	84449176	1	PLATE, , ASN D286
20	84807189	1	PLATE, , BSN C285
21	322357	AR	WASHER, LOCK, {PP:80322357} Belleville, M6, Belleville, M6
22	86508568	AR	SCREW, Hex, M6 x 16, 8.8, M6x16
23	390840	1	PLUG, {PP:80390840}

www.KOBMO.BY

03.05(01) GEARBOX, STUDS

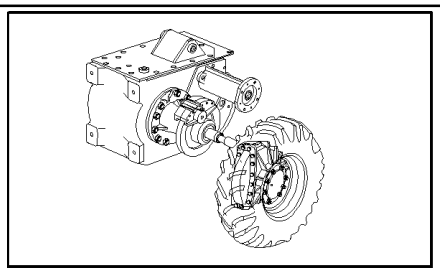

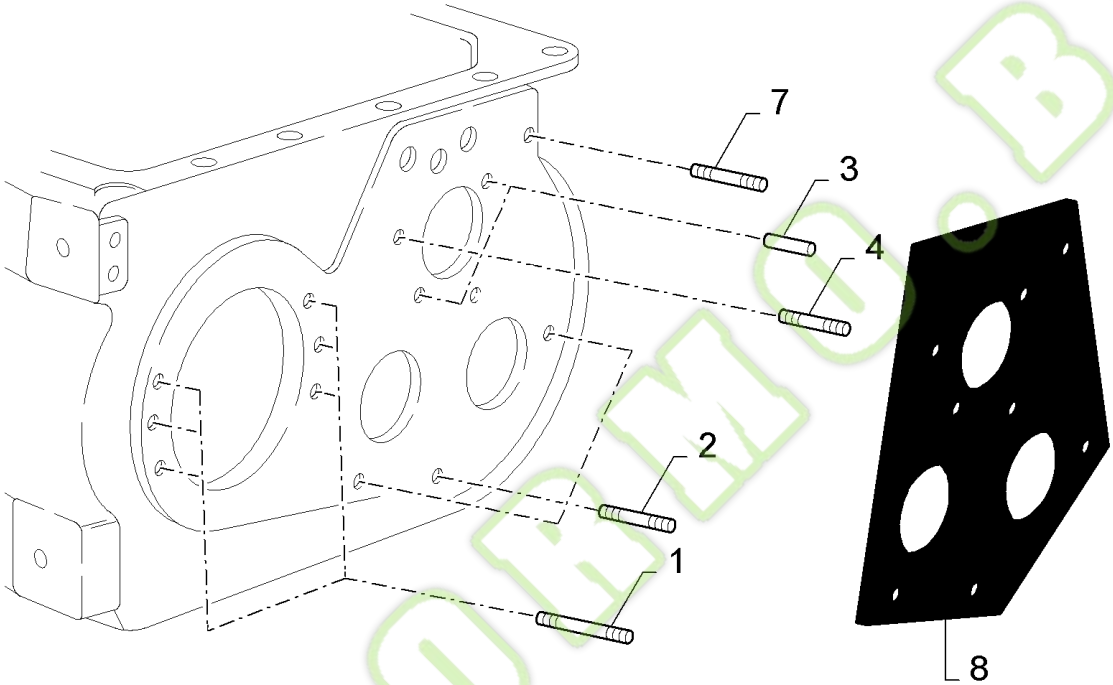

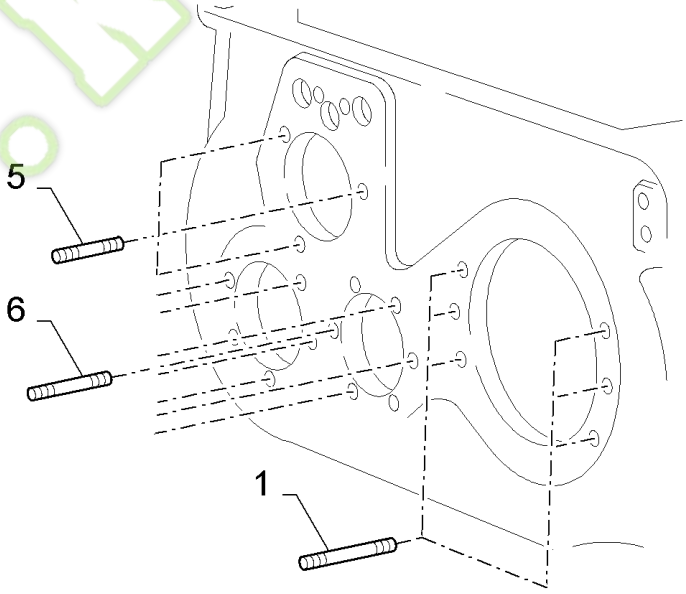

www.KOMO.BY

FX50 SELF-PROPELLED FORAGE HARVESTER (10/02-)

03.05(01) GEARBOX, STUDS

Ref	Part Number	Qty	Description
1	9817207	12	STUD, {PP:89817207}
2	321665	3	STUD, {PP:80321665}
3	322423	2	PIN, {PP:80322423}
4	336270	2	STUD, {PP:80336270}
5	110019	3	STUD, {PP:80110019}
6	110020	11	STUD, {PP:80110020}
7	350341	1	STUD, {PP:80350341}
8	456162	1	GASKET, {PP:80456162}

www.KOBMO.BY

03.06(01) DIFFERENTIAL

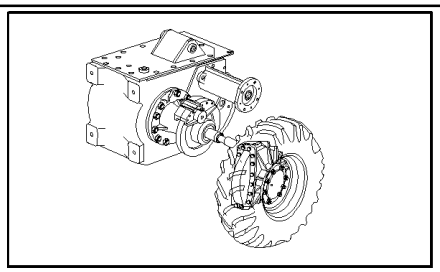

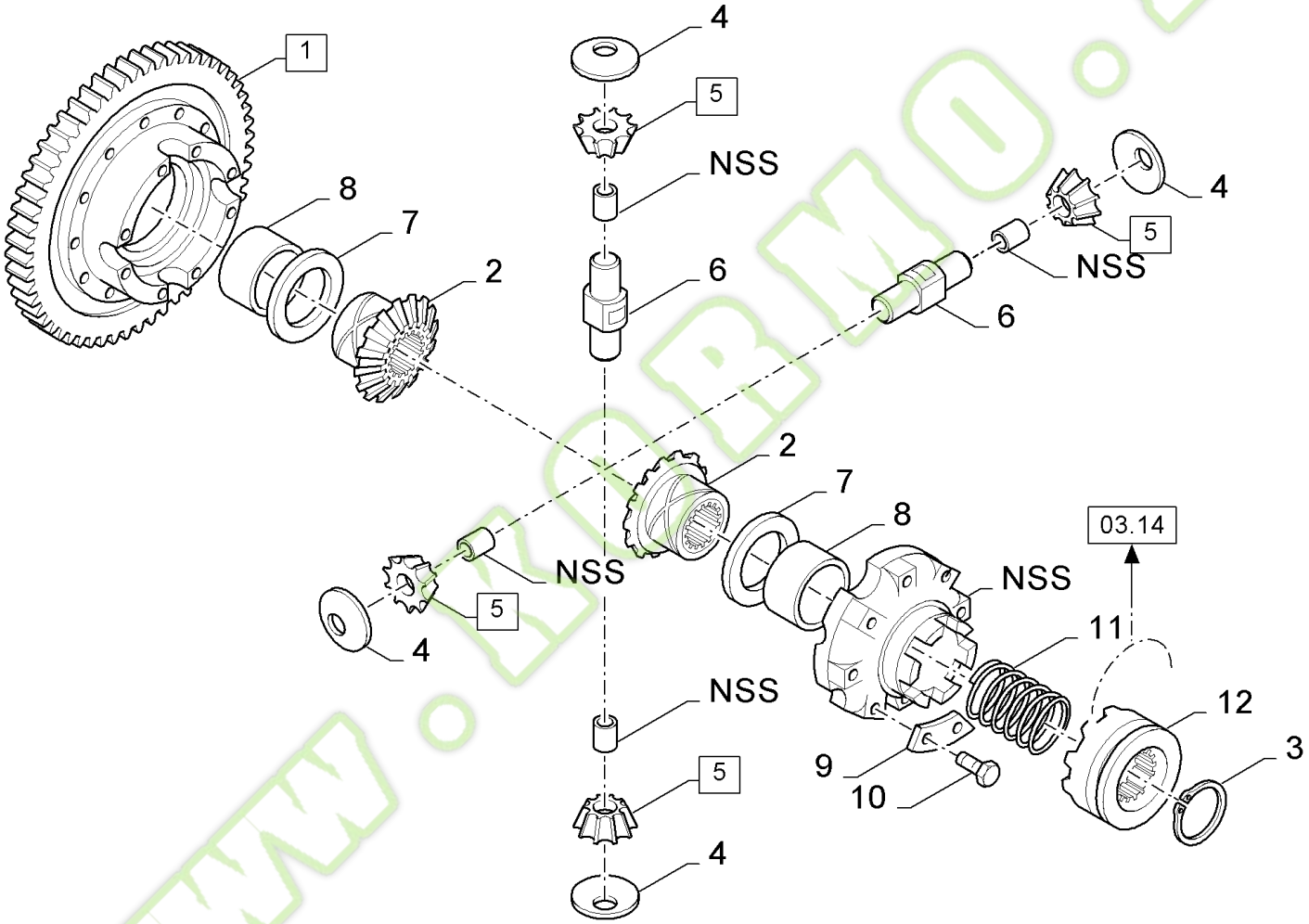

www.KOBMO.BY

FX50 SELF-PROPELLED FORAGE HARVESTER (10/02-)

03.06(01) DIFFERENTIAL

Ref	Part Number	Qty	Description
1	84043222	1	DIFFERENTIAL, (2 to 10)
2	9514042	2	SPROCKET, DRIVEN, {PP:89514042}
3	327911	1	CIRCLIP, {PP:80327911}
4	210014	4	WASHER, {PP:80210014}
5	9850394	4	GEAR, {PP:89850394} (3)
6	9514041	2	SHAFT, {PP:89514041}
7	210013	2	WASHER, THRUST, {PP:80210013}
8	9514039	2	BUSHING, {PP:89514039}
9	331649	4	PLATE, LOCKING, {PP:80331649}
10	120073	8	SCREW, {PP:80120073} Hex, M10 x 80, 8.8, M10x80
11	455097	1	SPRING, {PP:80455097}
12	455094	1	RING, {PP:80455094}

WWW.KOBMO.BY

03.07(01) BRAKE DISCS

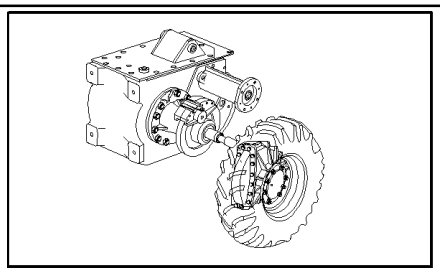

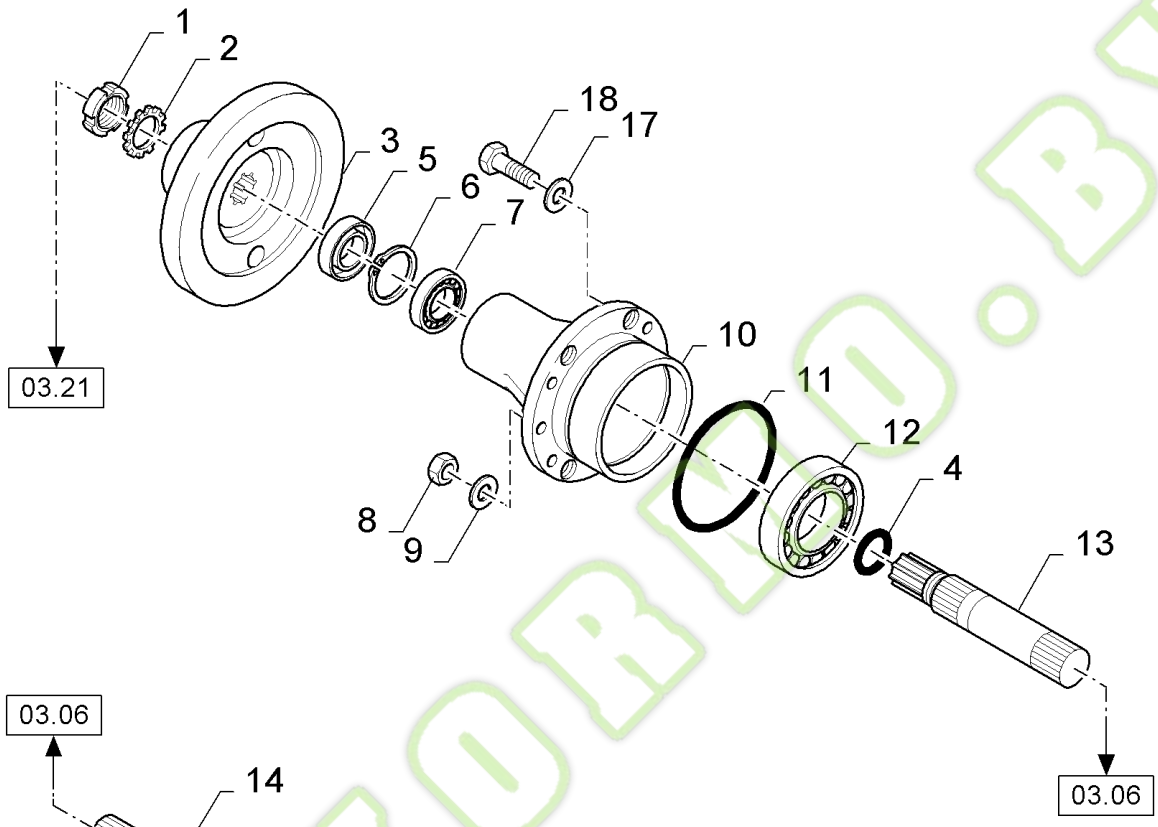

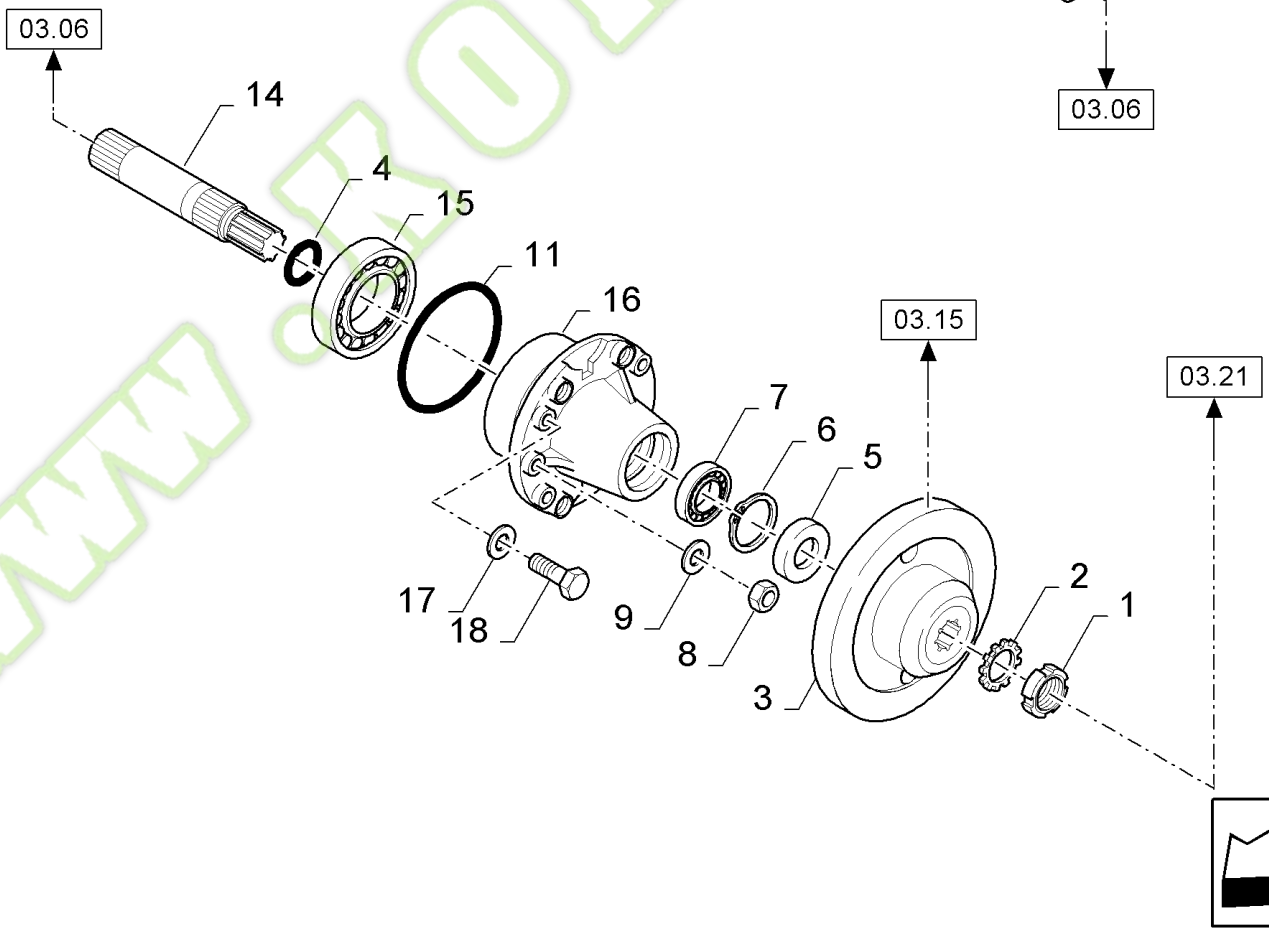

www.ROBEO.BY

FX50 SELF-PROPELLED FORAGE HARVESTER (10/02-)

03.07(01) BRAKE DISCS

Ref	Part Number	Qty	Description
1	9513020	2	NUT, {PP:89513020} M50x1.5
2	382867	3	WASHER, LOCK, {PP:80382867}
3	84807250	2	BRAKE DISC,
4	235782	2	O-RING, {PP:80235782} -224, 90 Duro, 1.734" ID x .139" Thk,
5	84017986	2	ELEMENT, SEALING,
6	80300633	2	RING, SNAP,
7	86516079	2	BEARING, BALL,
8	89706685	12	NUT, M12
9	140046	12	WASHER, LOCK, {PP:80140046} Belleville, M12, 12MM
10	9819544	1	FLANGE, {PP:89819544} RH
11	9815655	2	O-RING, {PP:89815655}
12	210046	1	BEARING ASSY, {PP:80210046}
13	9819514	1	SHAFT, {PP:89819514} RH
14	89815650	1	SHAFT, LH
15	418831	1	BEARING ASSY, {PP:80418831}
16	89819448	1	FLANGE, LH
17	322358	4	WASHER, LOCK, {PP:80322358} Belleville, M8, 8MM
18	80300380	4	SCREW, M8x10

www.KOBMO.BY

03.08(01) GEARS

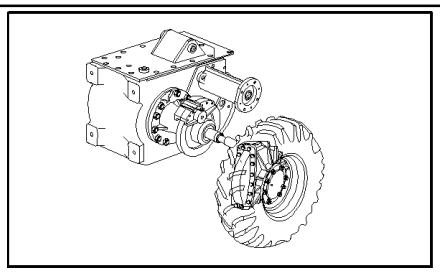

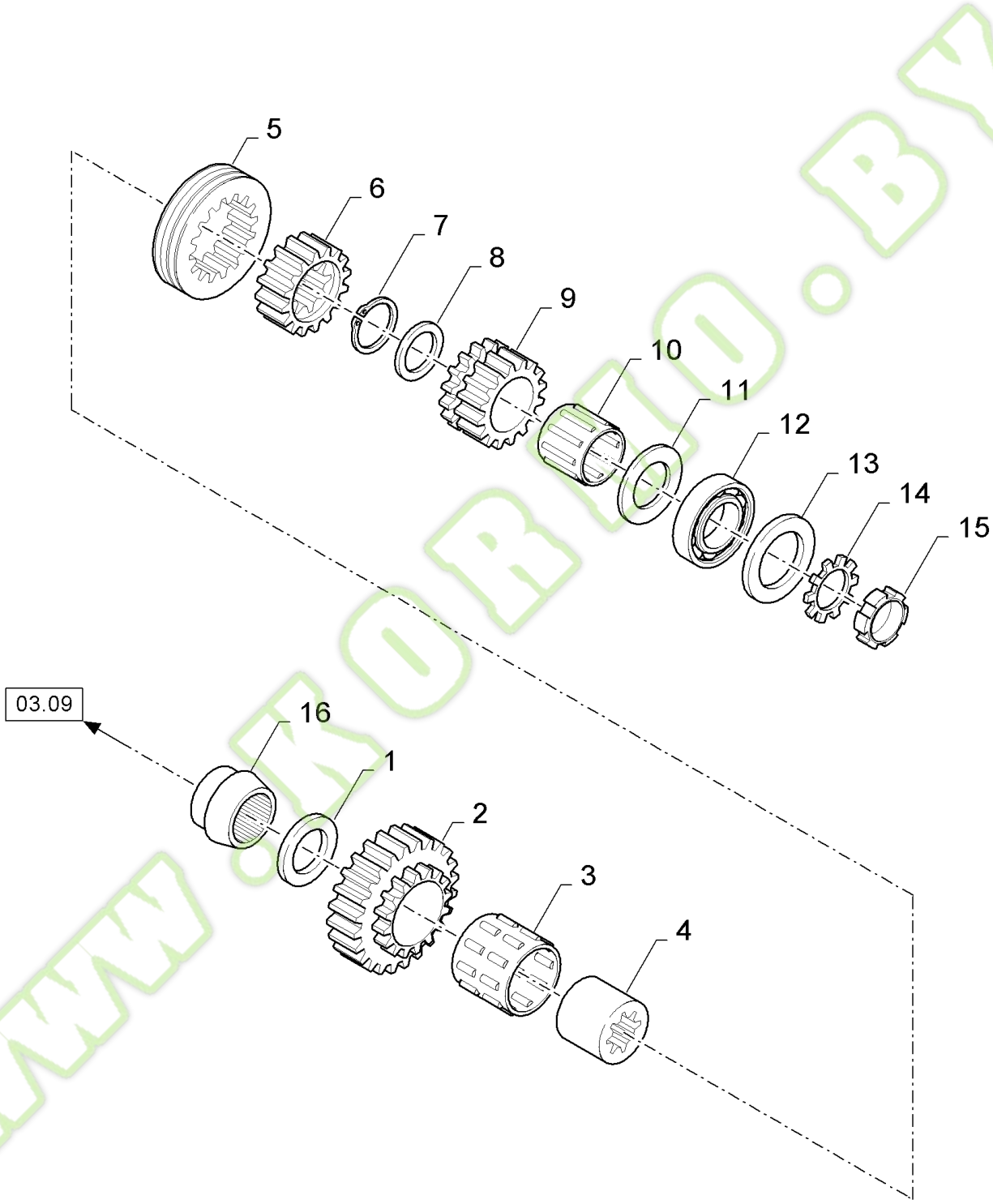

www.kobelco.by

FX50 SELF-PROPELLED FORAGE HARVESTER (10/02-)

03.08(01) GEARS

Ref	Part Number	Qty	Description
1	396117	1	WASHER, {PP:80396117}
2	84021902	1	GEAR,
3	396135	1	BEARING ASSY, {PP:80396135}
4	394028	1	BUSHING, {PP:80394028}
5	9837152	1	SYNCHRONIZER, {PP:89837152}
6	396116	1	COUPLING, SPLINED, {PP:80396116}
7	396138	1	CIRCLIP, {PP:80396138}
8	381827	1	WASHER, {PP:80381827}
9	9837151	1	GEAR, {PP:89837151}
10	394027	1	BEARING ASSY, {PP:80394027}
11	381826	1	WASHER, {PP:80381826}
12	456331	1	BEARING ASSY, {PP:80456331}
13	412608	AR	SHIM, {PP:80412608} THK.:0.2MM
13	412609	AR	SHIM, {PP:80412609} THK.:0.5MM
14	412352	1	PLATE, LOCKING, {PP:80412352}
15	412351	1	NUT, {PP:80412351} M35x1.5
16	84043224	1	SLEEVE,

www.KOBMO.BY

03.09(01) GEARS

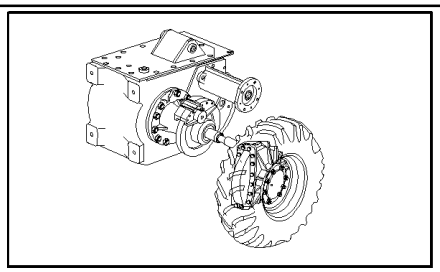

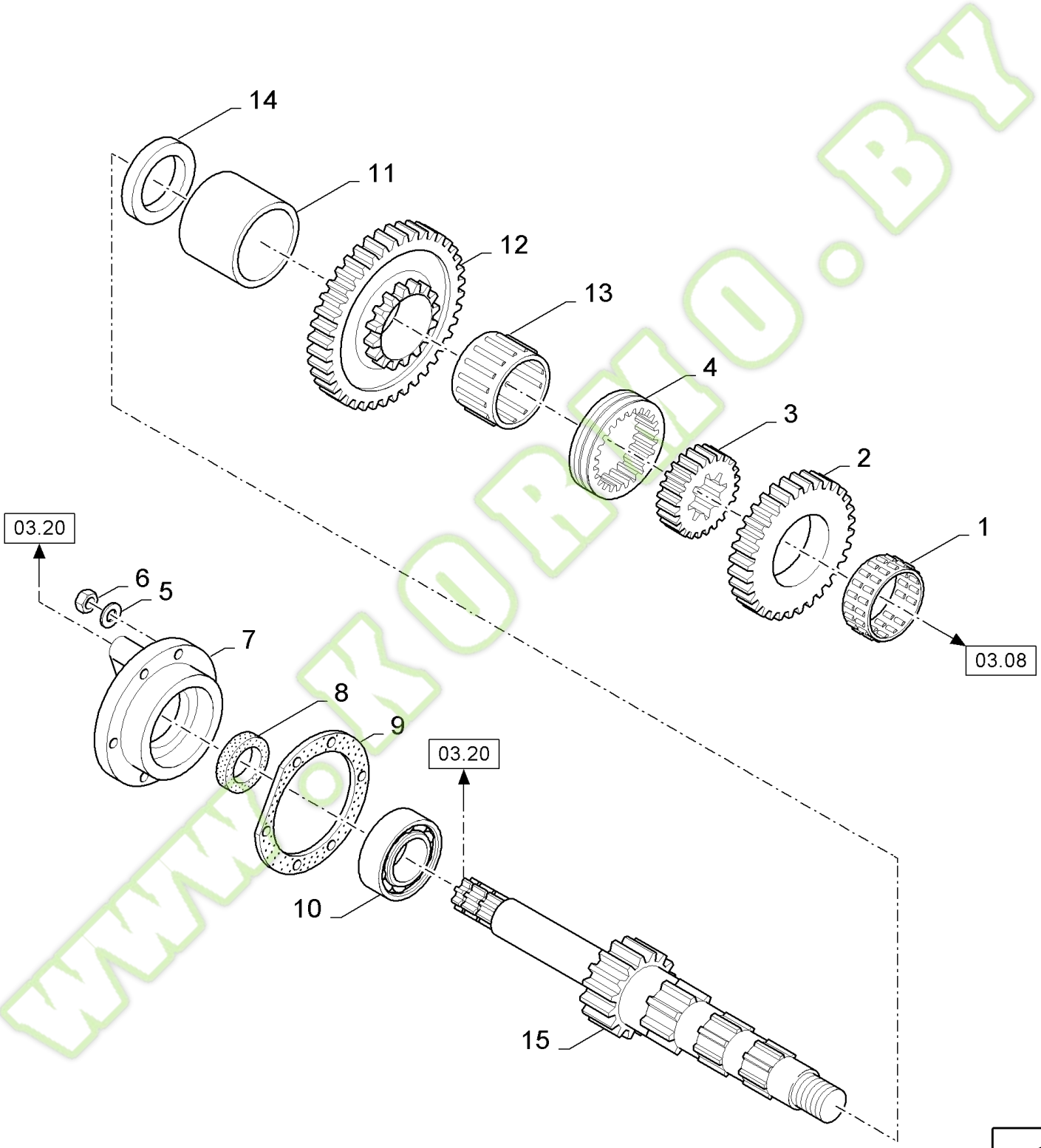

www.KOBMO.BY

FX50 SELF-PROPELLED FORAGE HARVESTER (10/02-)

03.09(01) GEARS

Ref	Part Number	Qty	Description
1	84043299	1	BEARING, NEEDLE, , SET OF 2
2	84061273	1	GEAR,
3	396120	1	SLEEVE, {PP:80396120}
4	9837153	1	SYNCHRONIZER, {PP:89837153}
5	140045	6	WASHER, LOCK, {PP:80140045} Belleville, M10, 10MM
6	100016	6	NUT, {PP:80100016} M10, Cl 8, M10
7	84043229	1	FLANGE,
8	80535911	1	GASKET,
9	9819906	1	GASKET, {PP:89819906}
10	84005316	1	BEARING ASSY,
11	84043225	1	SLEEVE,
12	84078074	1	GEAR,
13	396137	1	BEARING ASSY, {PP:80396137}
14	84043223	1	RING,
15	84043232	1	SHAFT,

www.KOBMO.BY

03.10(01) GEARS

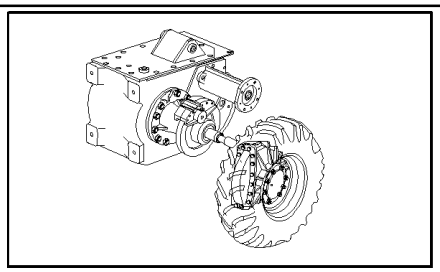

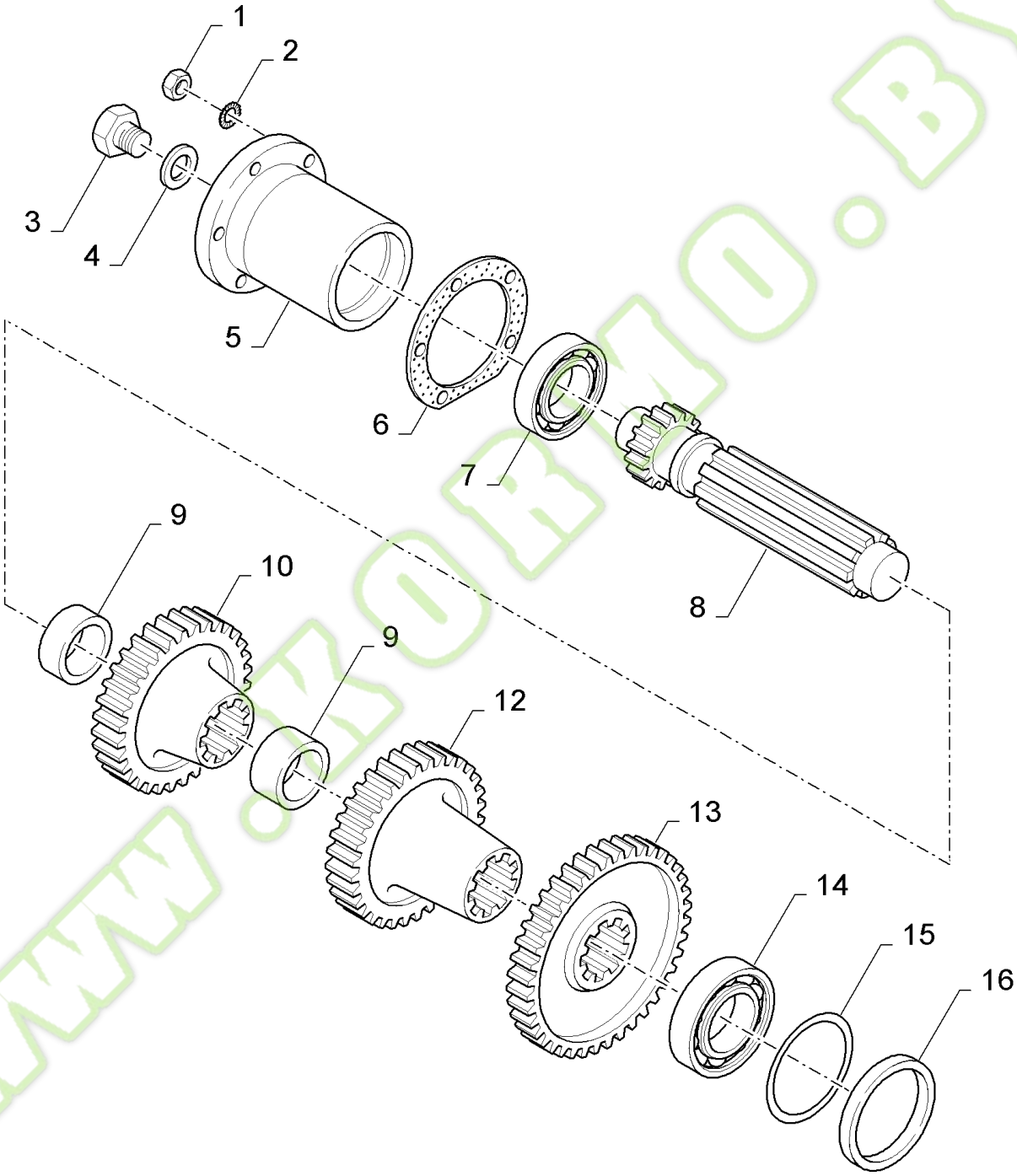

www.KOBMO.BY

FX50 SELF-PROPELLED FORAGE HARVESTER (10/02-)

03.10(01) GEARS

Ref	Part Number	Qty	Description
1	100016	5	NUT, {PP:80100016} M10, Cl 8, M10
2	140045	5	WASHER, LOCK, {PP:80140045} Belleville, M10, 10MM
3	150006	1	PLUG, {PP:80150006}
4	220025	1	GASKET, {PP:80220025}
5	84043231	1	FLANGE,
6	394468	1	GASKET, {PP:80394468}
7	323327	1	BEARING ASSY, {PP:80323327}
8	84078075	1	SHAFT,
9	394361	1	BUSHING, {PP:80394361}
10	84061271	1	GEAR,
12	796145	1	GEAR, {PP:80796145}
13	384262	1	GEAR, {PP:80384262}
14	423362	1	BEARING ASSY, {PP:80423362}
15	412192	AR	SHIM, {PP:80412192}
16	430964	1	BUSHING, {PP:80430964}

www.KOBMO.BY

03.11(01) GEARS

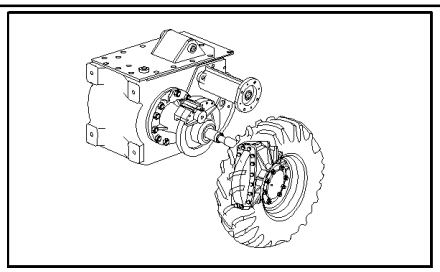

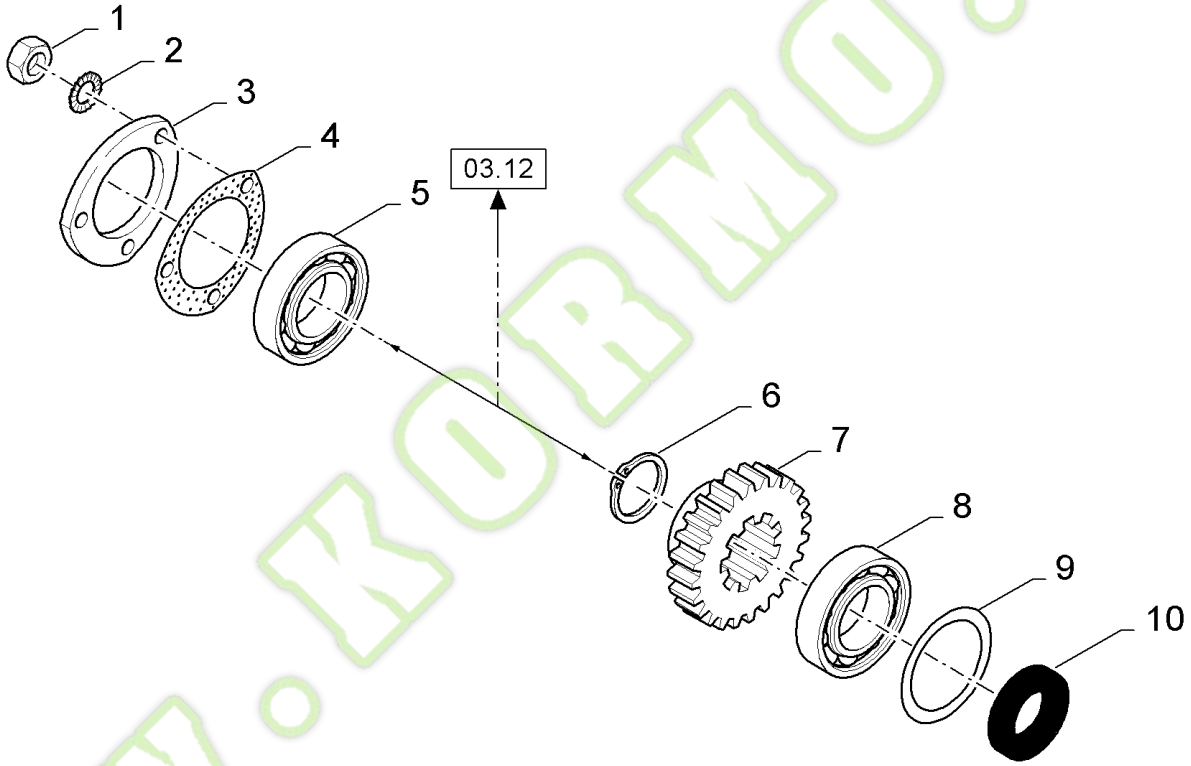

www.KOBMO.BY

FX50 SELF-PROPELLED FORAGE HARVESTER (10/02-)

03.11(01) GEARS

Ref	Part Number	Qty	Description
1	100016	3	NUT, {PP:80100016} M10, Cl 8, M10
2	140045	3	WASHER, LOCK, {PP:80140045} Belleville, M10, 10MM
3	381934	1	FLANGE, {PP:80381934}
4	382225	1	GASKET, {PP:80382225}
5	80210048	1	BEARING ASSY,
6	396138	1	CIRCLIP, {PP:80396138}
7	395963	1	GEAR, {PP:80395963}
8	42543	1	BEARING ASSY, {PP:80042543}
9	412192	AR	SHIM, {PP:80412192}
10	388116	1	SEAL, {PP:80388116}

www.KOBMO.BY

03.12(01) HYDROSTATIC DRIVE, SPECIFIC PARTS

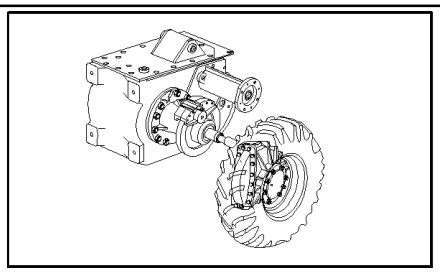

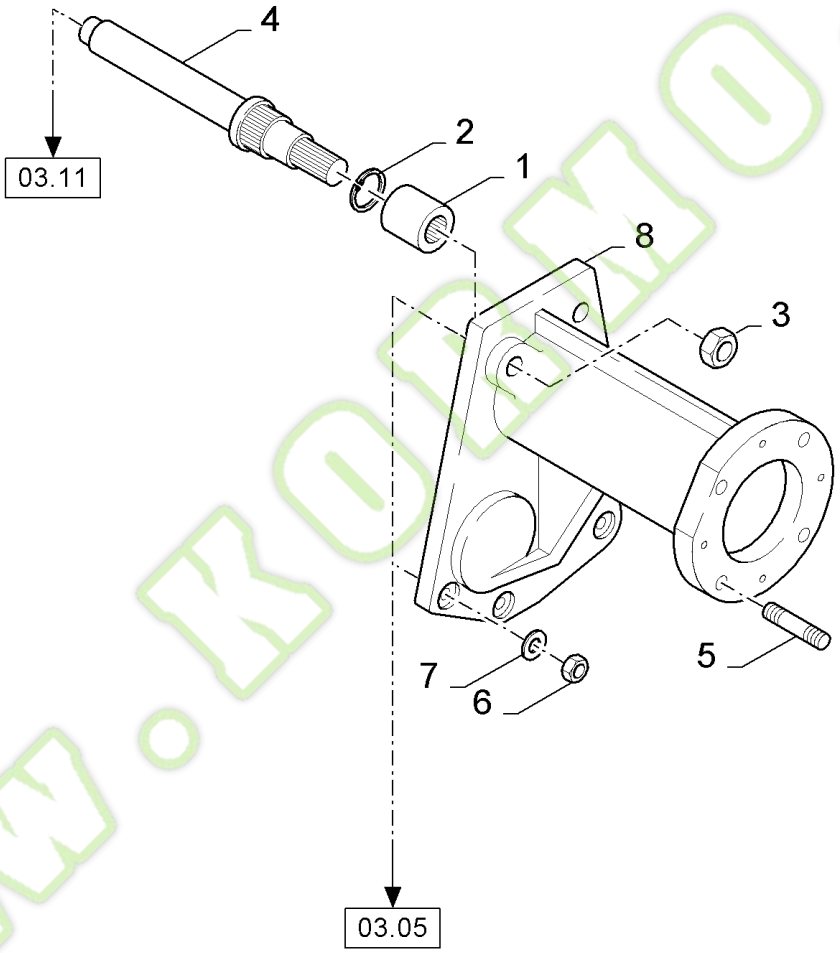

www.KOMO.BY

03.12(01) HYDROSTATIC DRIVE, SPECIFIC PARTS

Ref	Part Number	Qty	Description
1	696665	1	COUPLING, {PP:80696665}
2	86629584	1	RING, SNAP, 1.375", Int, #137, 1.375", Int, #137
3	100037	2	NUT, {PP:80100037} M10 x 1.5, Cl 8, M10
4	396115	1	SHAFT, {PP:80396115}
5	350341	4	STUD, {PP:80350341}
6	89706685	4	NUT, M12
7	140046	4	WASHER, LOCK, {PP:80140046} Belleville, M12, 12MM
8	84807185	1	SUPPORT,

www.KOBMO.BY

03.13(01) DIFFERENTIAL LOCK CONTROL

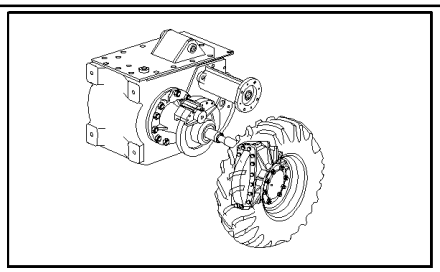

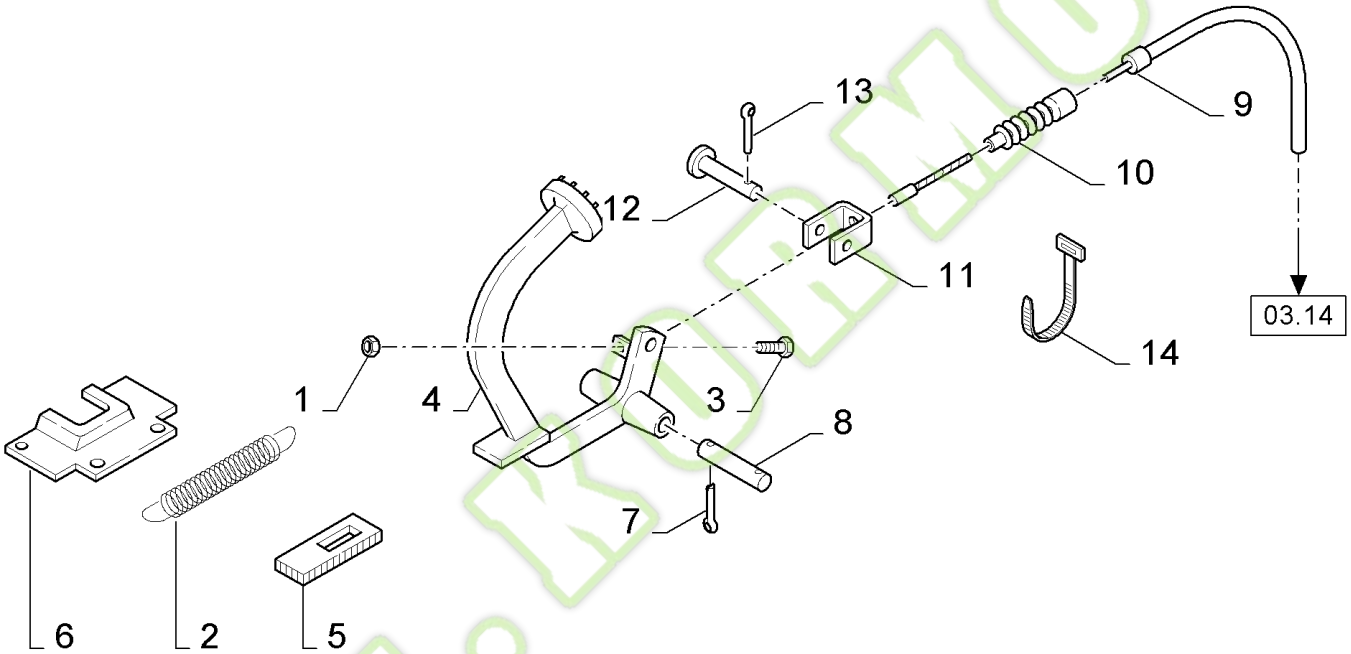

www.KOEMO.BY

03.13(01) DIFFERENTIAL LOCK CONTROL

Ref	Part Number	Qty	Description
1	89706690	1	NUT, CL 8, M8 x 1.25 x 13.0
2	9811656	1	SPRING, {PP:89811656}
3	43128	1	SCREW, {PP:80043128} Hex, M8 x 30, 8.8, Cap, HH, CL 8.8, M8 x 1.25 x 30
4	89839669	1	PEDAL,
5	89839853	1	ELEMENT, SEALING,
6	9819825	1	COVER, {PP:89819825}
7	412685	2	PIN, SPLIT (COTTER), {PP:80412685} M4 x 32,
8	80390066	1	PIN,
9	80431834	1	CABLE,
10	427705	1	COVER, {PP:80427705}
11	388340	1	YOKE, {PP:80388340}
12	376876	1	PIN, {PP:80376876}
13	300399	1	PIN, SPLIT (COTTER), {PP:80300399}
14	323597	3	STRAP, {PP:80323597}

WWW.KOBMO.BY

03.14(01) DIFFERENTIAL LOCK CONTROL

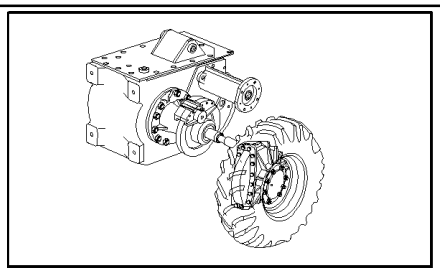

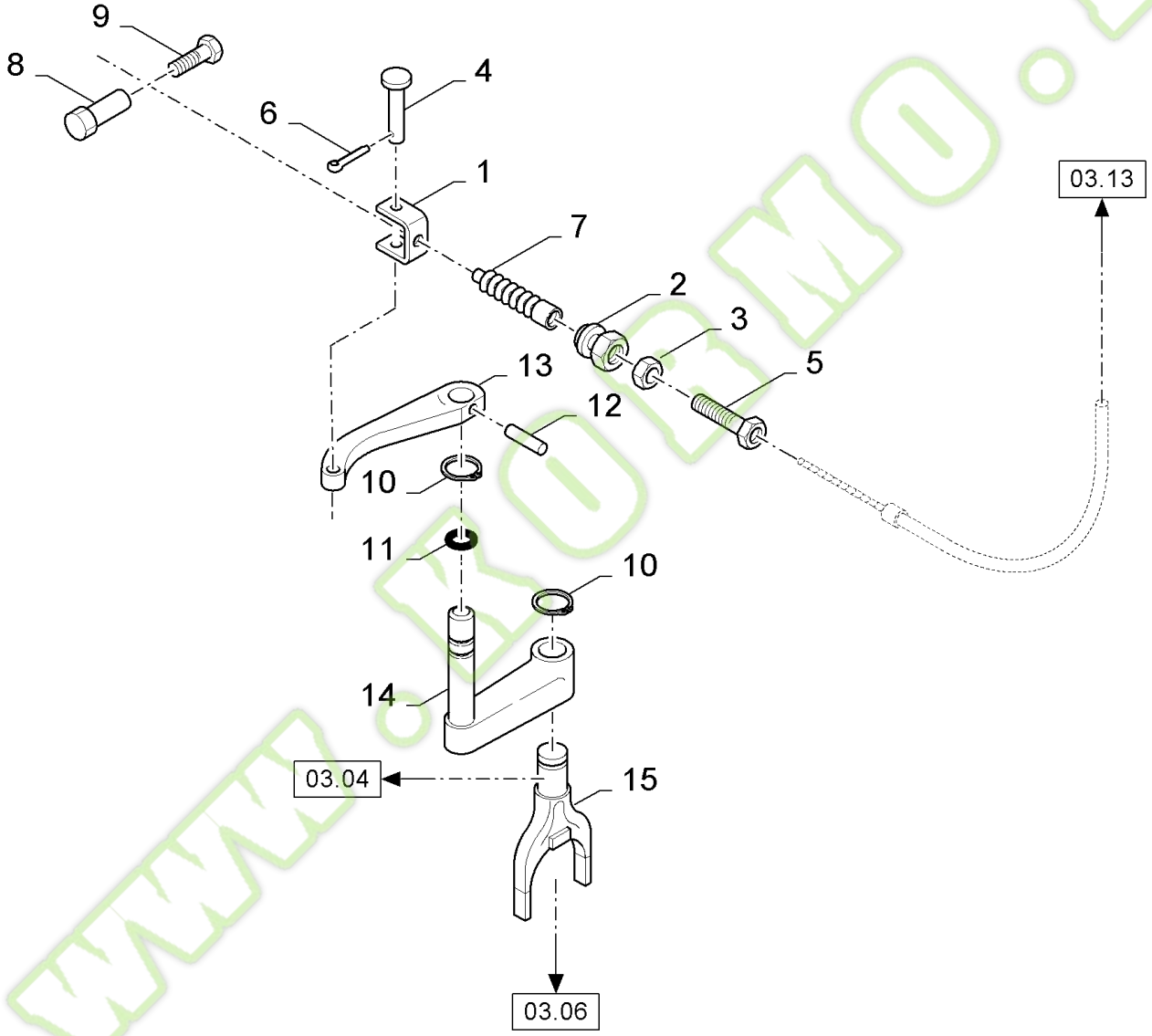

www.KORMO.BY

FX50 SELF-PROPELLED FORAGE HARVESTER (10/02-)

03.14(01) DIFFERENTIAL LOCK CONTROL

Ref	Part Number	Qty	Description
1	388340	1	YOKE, {PP:80388340}
2	449470	1	NUT, {PP:80449470}
3	100016	1	NUT, {PP:80100016} M10, Cl 8, M10
4	376876	1	PIN, {PP:80376876}
5	449469	1	SCREW, {PP:80449469}
6	300399	1	PIN, SPLIT (COTTER), {PP:80300399}
7	9818291	1	COVER, {PP:89818291}
8	381140	1	CLAMP, {PP:80381140}
9	120100	1	BOLT, {PP:80120100} Hex, M6 x 20, 8.8, M6x20
10	80370002	2	CIRCLIP,
11	89818942	1	O-RING,
12	9506888	1	PIN, {PP:89506888}
13	89818943	1	HANDLE,
14	89818945	1	ARM,
15	89818947	1	YOKE,

www.KOBMO.BY

03.15(01) BRAKE ASSY

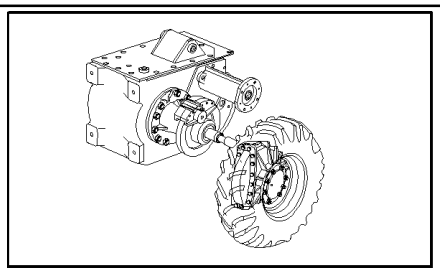

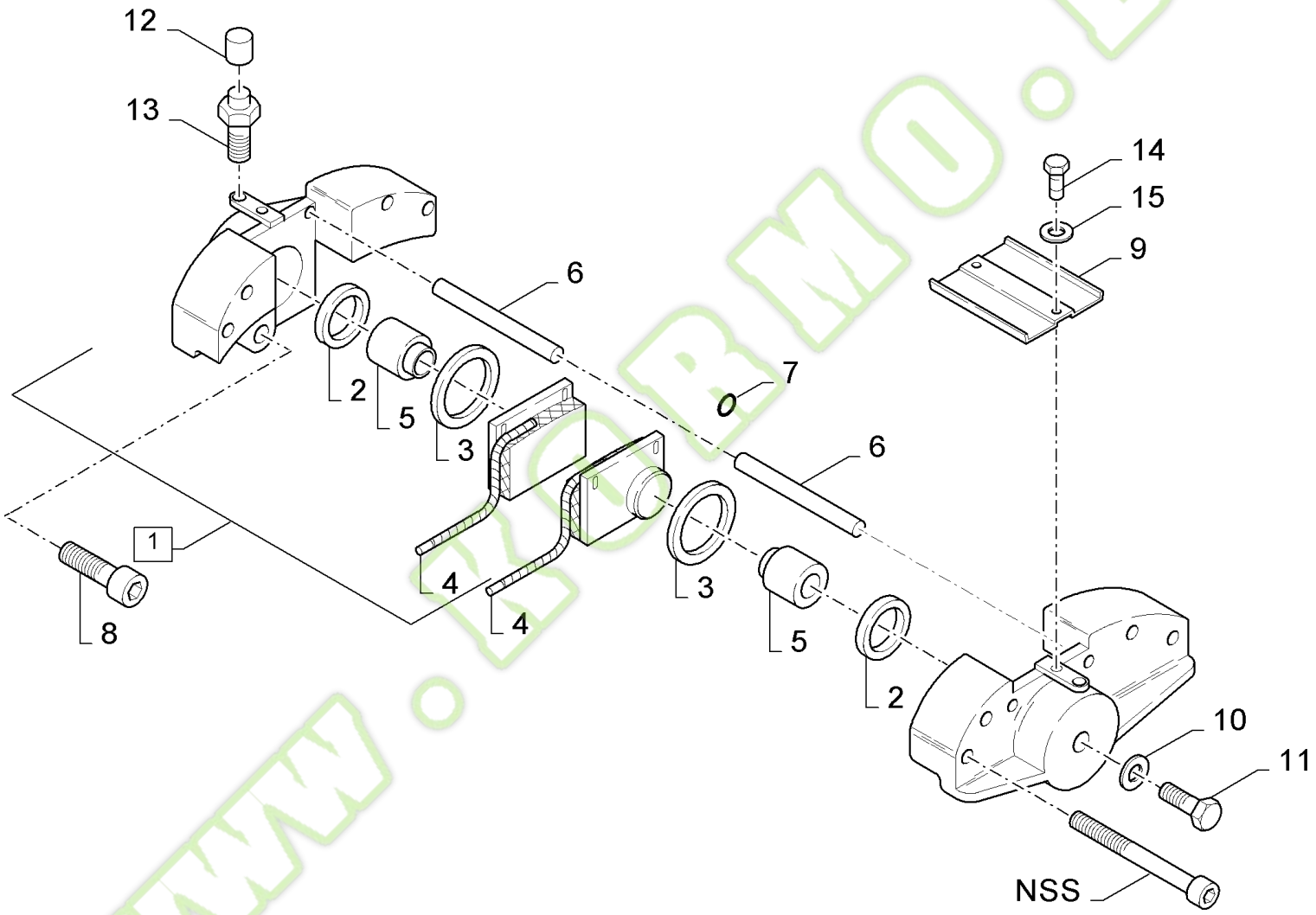

www.KOBMO.BY

FX50 SELF-PROPELLED FORAGE HARVESTER (10/02-)

03.15(01) BRAKE ASSY

Ref	Part Number	Qty	Description
1	9819370	4	BRAKE, {PP:89819370} (2 to 7)
2	9835351	8	GASKET, {PP:89835351}
3	9835350	8	GASKET, {PP:89835350}
4	9832306	8	BRAKE, PAD, {PP:89832306}
5	9850149	8	PISTON, {PP:89850149}
6	9850148	8	PIN, {PP:89850148}
7	9835353	4	O-RING, {PP:89835353}
8	89817243	8	SCREW, Cap, HS, CL 12.9, M16 x 2 x 50
9	84004317	2	COVER,
10	84439102	8	RING,
11	9832307	8	PLUG, {PP:89832307}
12	9835349	4	CAP, INTRODUCTION, {PP:89835349}
13	9832308	4	PLUG, {PP:89832308}
14	80300806	4	SCREW, M5x10
15	322356	4	WASHER, LOCK, {PP:80322356}

www.KOBMO.BY

03.16(01) CIRCUIT FOR HYDRAULIC BRAKES - C305

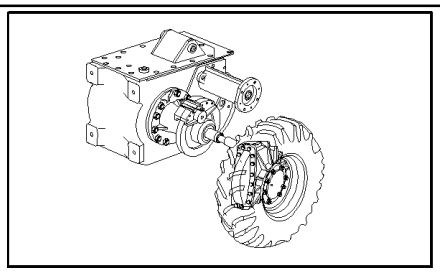

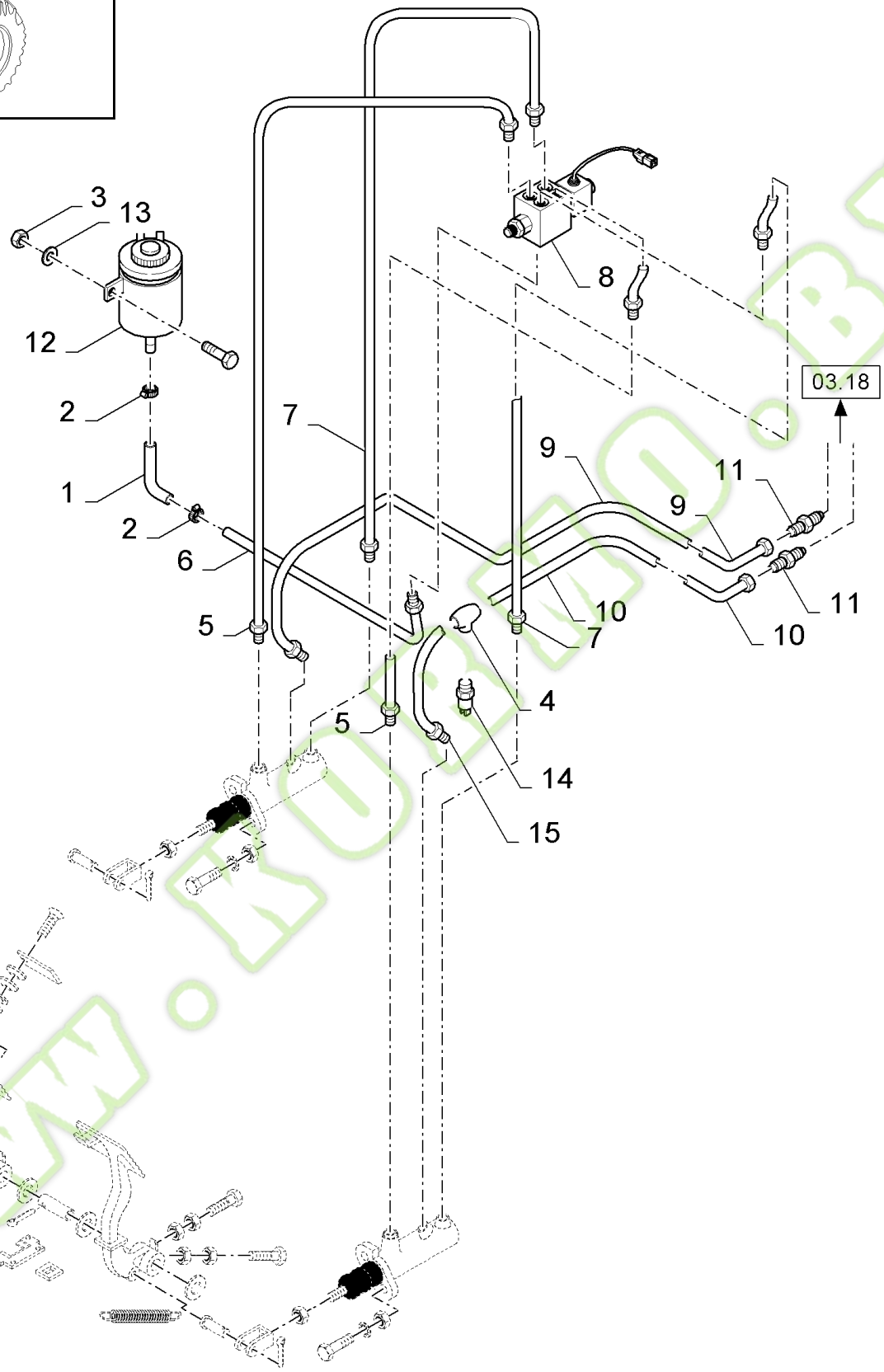

www.ROBEO.BY

FX50 SELF-PROPELLED FORAGE HARVESTER (10/02-)

03.16(01) CIRCUIT FOR HYDRAULIC BRAKES - C305

Ref	Part Number	Qty	Description
1	410970	1	HOSE, {PP:80410970}
2	913888	2	CLAMP, {PP:80913888}
3	9706755	2	NUT, {PP:89706755} M6, Cl 8, M6
4	9505391	1	CONNECTION, 3 WAY, {PP:89505391}
5	84817773	2	TUBE, HYD,
6	84817769	1	TUBE, HYD,
7	84817771	2	TUBE, HYD,
8	84607499	1	VALVE, HYDRAULIC,
9	84000932	1	TUBE, HYD,
10	84014321	1	TUBE, HYD,
11	336722	2	CONNECTOR, HYD., {PP:80336722}
12	9819520	1	RESERVOIR, HYDRAULIC OIL, {PP:89819520}
13	322357	2	WASHER, LOCK, {PP:80322357} Belleville, M6, Belleville, M6
14	354372	1	SENSOR, {PP:80354372}
15	84014319	1	TUBE, HYD,
16	86508568	2	SCREW, Hex, M6 x 16, 8.8, M6x16

www.KOBMO.BY

03.16A(01) CIRCUIT FOR HYDRAULIC BRAKES - D306

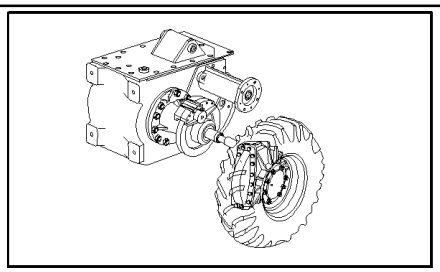

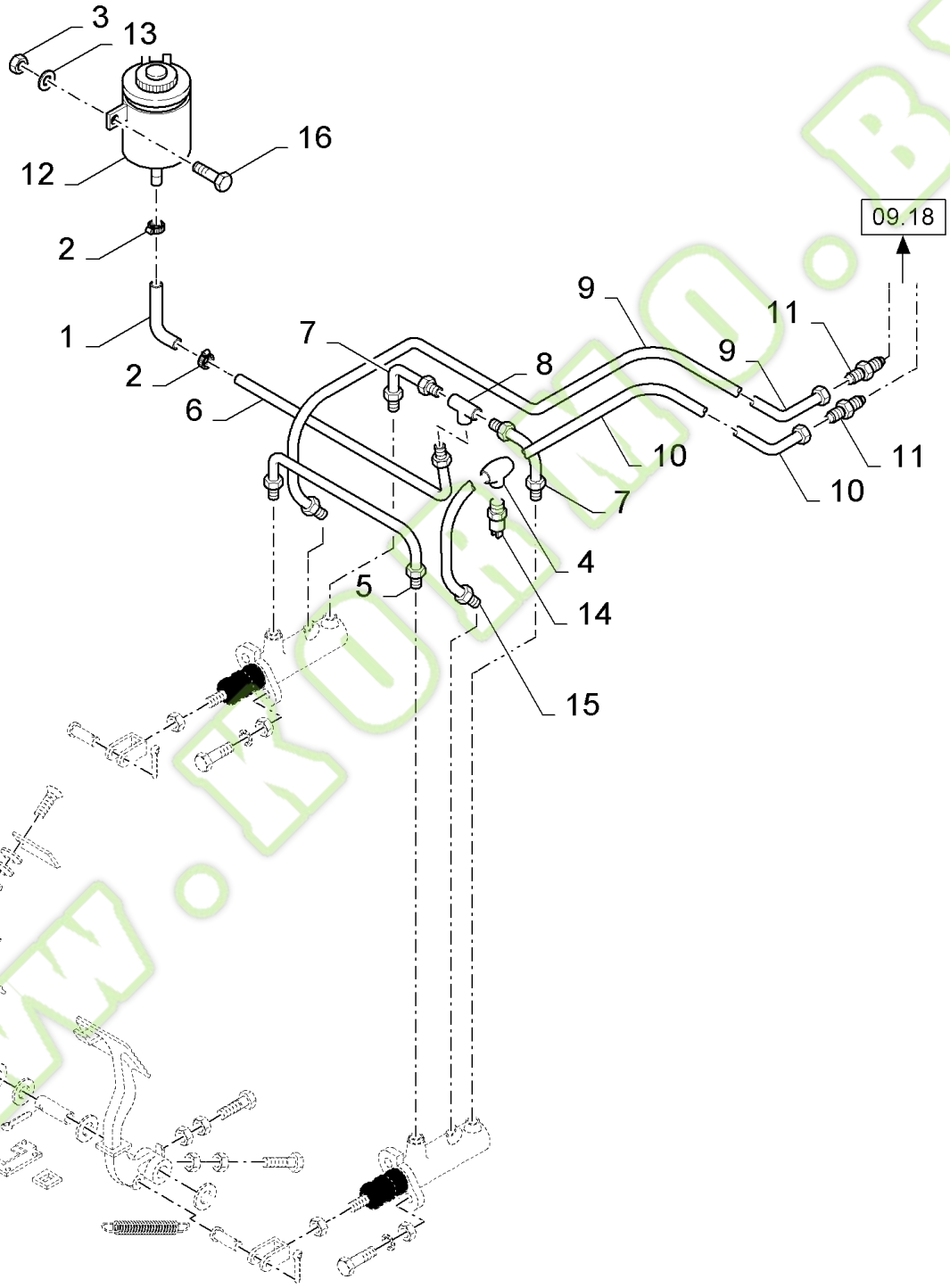

www.ROMO.BY

FX50 SELF-PROPELLED FORAGE HARVESTER (10/02-)

03.16A(01) CIRCUIT FOR HYDRAULIC BRAKES - D306

Ref	Part Number	Qty	Description
1	410970	1	HOSE, {PP:80410970}
2	913888	2	CLAMP, {PP:80913888}
3	9706755	2	NUT, {PP:89706755} M6, Cl 8, M6
4	9505391	1	CONNECTION, 3 WAY, {PP:89505391}
5	84014317	2	TUBE, HYD,
6	84014219	1	TUBE, HYD,
7	9837814	2	TUBE, HYD, {PP:89837814}
8	919855	1	CONNECTION, 3 WAY, {PP:80919855}
9	84000932	1	TUBE, HYD,
10	84014321	1	TUBE, HYD,
11	336722	2	CONNECTOR, HYD., {PP:80336722}
12	9819520	1	RESERVOIR, HYDRAULIC OIL, {PP:89819520}
13	322357	2	WASHER, LOCK, {PP:80322357} Belleville, M6, Belleville, M6
14	354372	1	SENSOR, {PP:80354372}
15	84014319	1	TUBE, HYD,
16	86508568	2	SCREW, Hex, M6 x 16, 8.8, M6x16

www.KOBMO.BY

03.17(01) PEDALS HYDRAULIC BRAKES

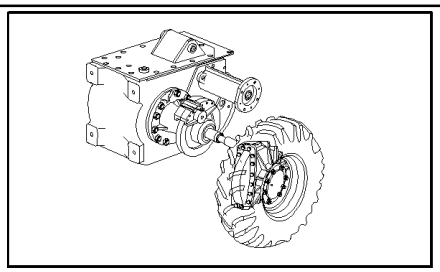

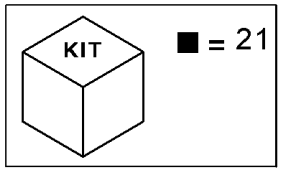

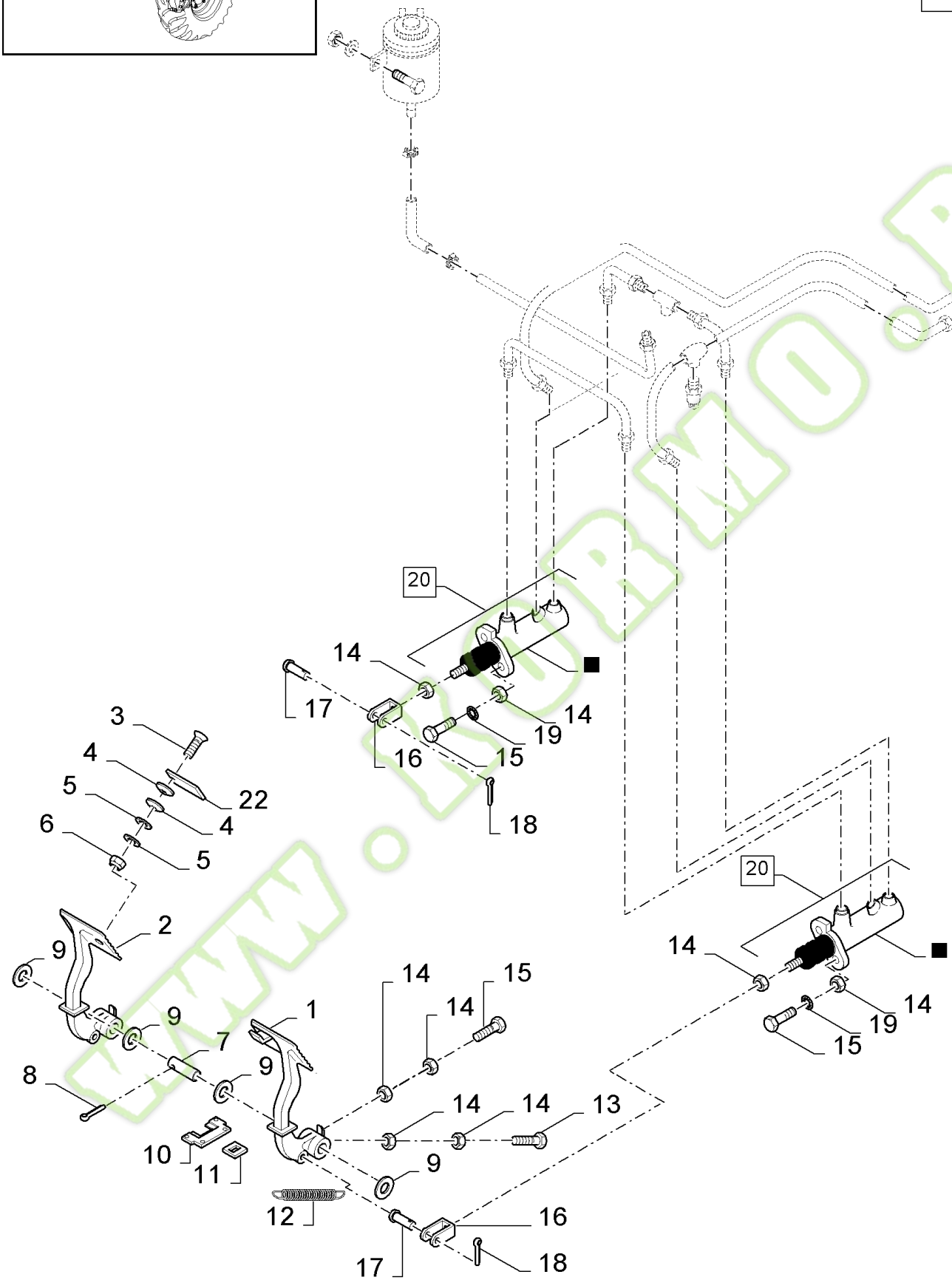

www.KUBMOBY

FX50 SELF-PROPELLED FORAGE HARVESTER (10/02-)

03.17(01) PEDALS HYDRAULIC BRAKES

Ref	Part Number	Qty	Description
1	9594861	1	PEDAL, {PP:89594861} LH
2	9594862	1	PEDAL, {PP:89594862} RH
3	412168	1	SCREW, {PP:80412168} Hex Soc Flat Hd, M8 x 30, 8.8, M8x30
4	397881	2	WASHER, {PP:80397881}
5	84012127	2	WASHER, LOCK,
6	43442	1	NUT, {PP:80043442} M8 x 1.25", Cl 8, M8
7	9819905	1	SHAFT, {PP:89819905}
8	130007	2	PIN, SPLIT (COTTER), {PP:80130007} M4 x 25,
9	9513615	AR	WASHER, {PP:89513615}
10	9819825	2	COVER, {PP:89819825}
11	9819826	2	ELEMENT, SEALING, {PP:89819826}
12	9811656	2	SPRING, {PP:89811656}
13	120106	2	SCREW, {PP:80120106} Hex, M8 x 40, 8.8, Full Thd, Hex, M8 x 40, 8.8, Full Thd
14	89706690	10	NUT, CL 8, M8 x 1.25 x 13.0
15	43128	6	SCREW, {PP:80043128} Hex, M8 x 30, 8.8, Cap, HH, CL 8.8, M8 x 1.25 x 30
16	921491	2	YOKE, {PP:80921491}
17	412414	2	PIN, {PP:80412414}
18	9512667	2	PIN, SPLIT (COTTER), {PP:89512667} M6.3 x 40,
19	322358	4	WASHER, LOCK, {PP:80322358} Belleville, M8, 8MM
20	9509901	2	MASTER CYLINDER, {PP:89509901} (21)
21	9817544	2	KIT, REPAIR, {PP:89817544}
22	449009	1	PLATE, {PP:80449009}

www.KOBMO.BY

03.18(01) CIRCUIT FOR HYDRAULIC BRAKES

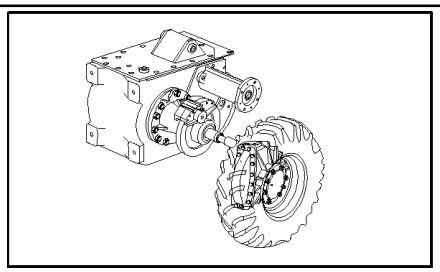

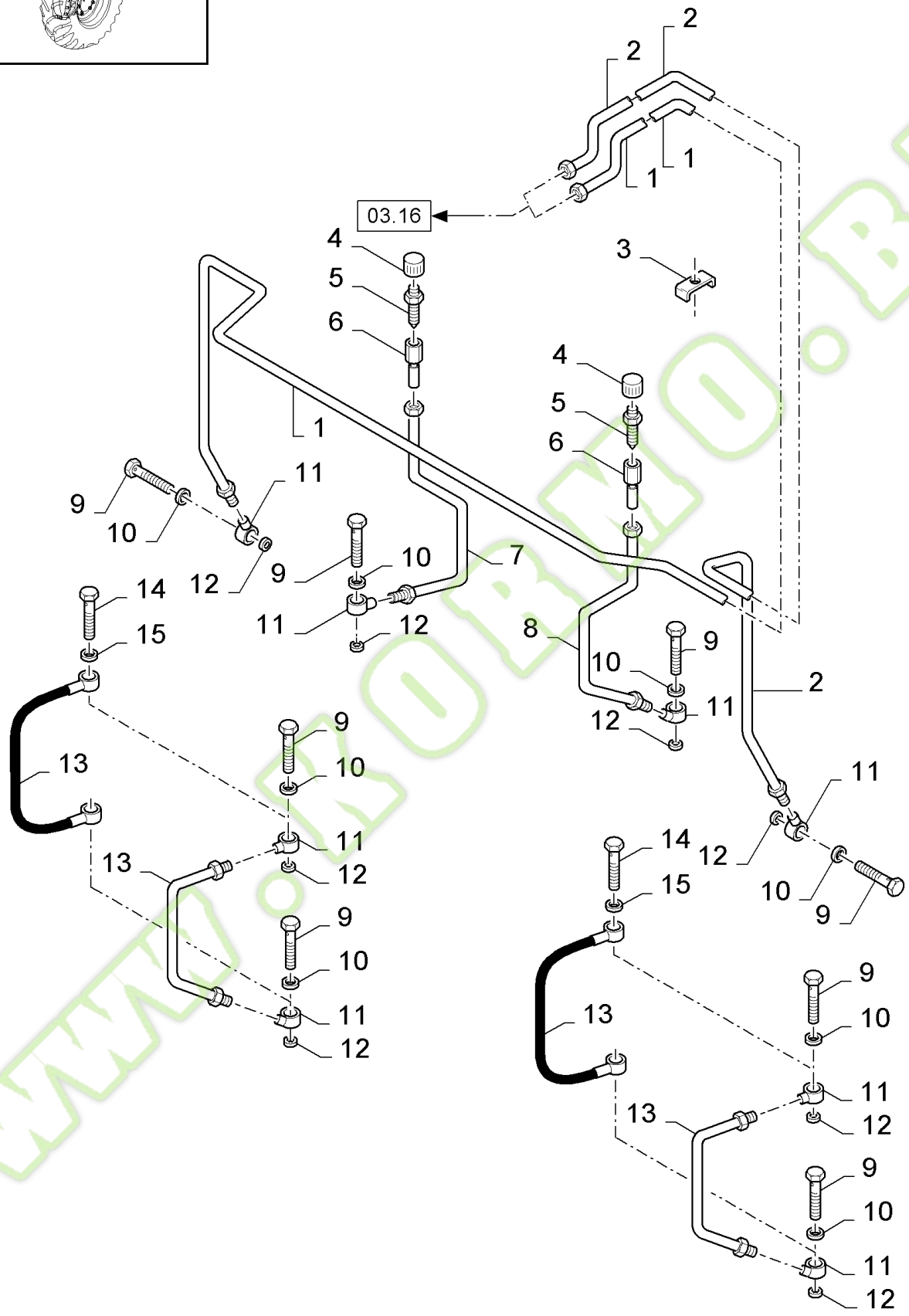

FX50 SELF-PROPELLED FORAGE HARVESTER (10/02-)

03.18(01) CIRCUIT FOR HYDRAULIC BRAKES

Ref	Part Number	Qty	Description
1	84022025	1	TUBE, RIGID, RH
2	84022027	1	TUBE, RIGID, LH
3	336760	AR	CLAMP, {PP:80336760}
4	9835349	2	CAP, INTRODUCTION, {PP:89835349}
5	9832308	2	PLUG, {PP:89832308}
6	9835807	2	CONNECTOR, HYD., {PP:89835807}
7	9835999	1	TUBE, HYD, {PP:89835999}
8	9837000	1	TUBE, HYD, {PP:89837000}
9	9832304	AR	SCREW, {PP:89832304}
10	355607	AR	RING, {PP:80355607} 12MM
11	9832303	AR	CONNECTOR, HYD., {PP:89832303}
12	84439102	AR	RING,
13	84441718	2	TUBE, , BSN C314
13	84447450	2	HOSE, FLEXIBLE, , ASN D315
14	84449205	4	SCREW, HOLLOW, , ASN D315
15	84449206	8	RING, , ASN D315

www.KOBMO.BY

03.19(01) TRANSMISSION HANDBRAKE

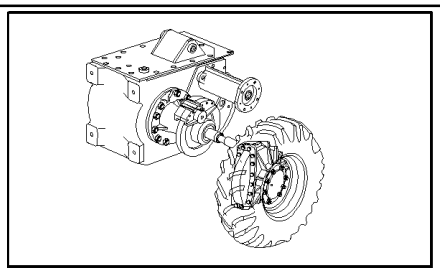

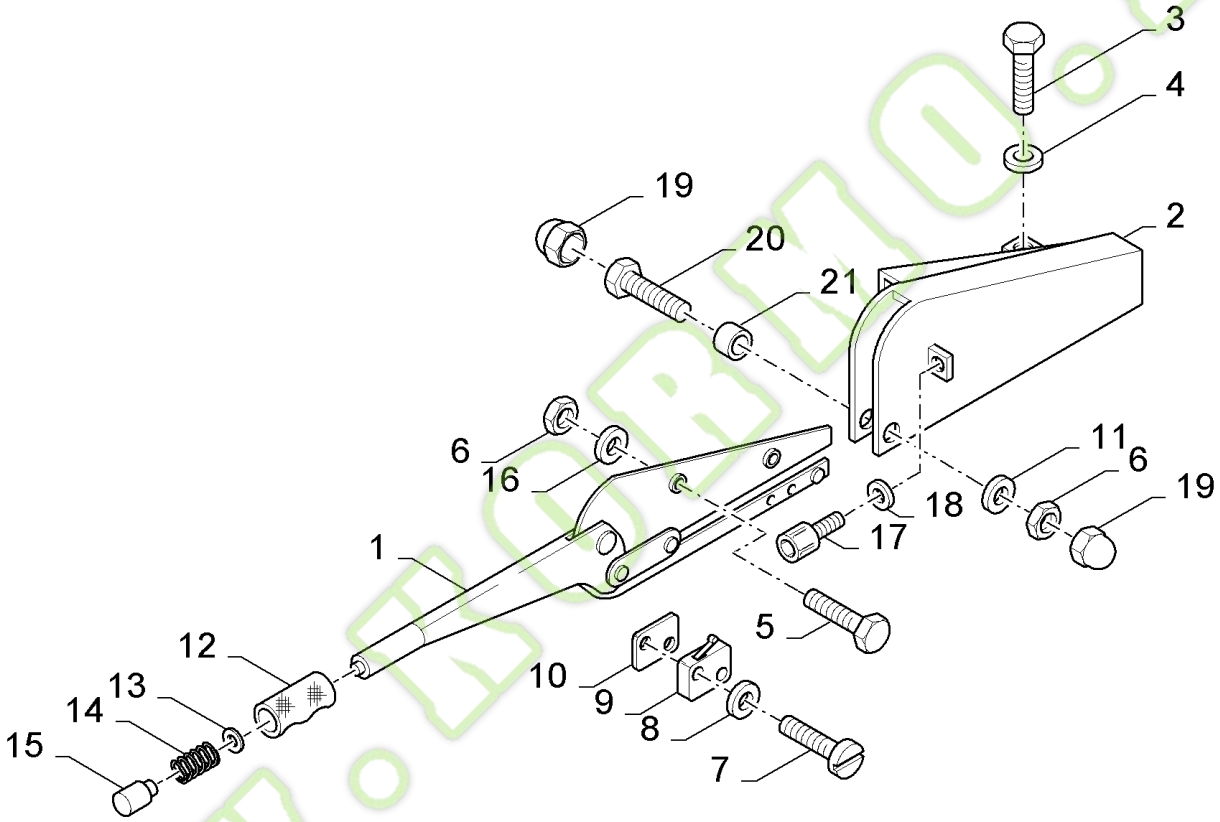

www.ROBIO.BY

FX50 SELF-PROPELLED FORAGE HARVESTER (10/02-)

03.19(01) TRANSMISSION HANDBRAKE

Ref	Part Number	Qty	Description
1	84050470	1	BRAKE, HAND,
2	84005291	1	SUPPORT,
3	80120104	1	SCREW, M8x20
4	322358	1	WASHER, LOCK, {PP:80322358} Belleville, M8, 8MM
5	80120102	4	SCREW, M6x40
6	9706755	5	NUT, {PP:89706755} M6, Cl 8, M6
7	84021091	2	SCREW, M3x20
8	412547	2	WASHER, LOCK, {PP:80412547} Serr, M3, 3MM
9	399159	1	SWITCH, {PP:80399159}
10	84015508	1	PLATE, COVER,
11	448889	1	WASHER, {PP:80448889}
12	E9NN2N672CB	1	HANDLE GRIP, {PP:81866090}
13	140015	1	WASHER, {PP:80140015} 6MM
14	84005684	1	SPRING,
15	84005683	1	KNOB,
16	322357	4	WASHER, LOCK, {PP:80322357} Belleville, M6, Belleville, M6
17	84007540	2	SCREW, M6x25
18	84007539	2	WASHER,
19	747881	2	NUT, {PP:80747881} M6
20	86977789	1	SCREW, Hex, M6 x 35, 8.8, Hex, M6 x 35, 8.8
21	84014547	1	BUSHING,

www.KOBMO.BY

03.20(01) TRANSMISSION HANDBRAKE

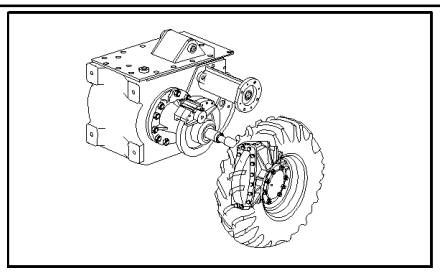

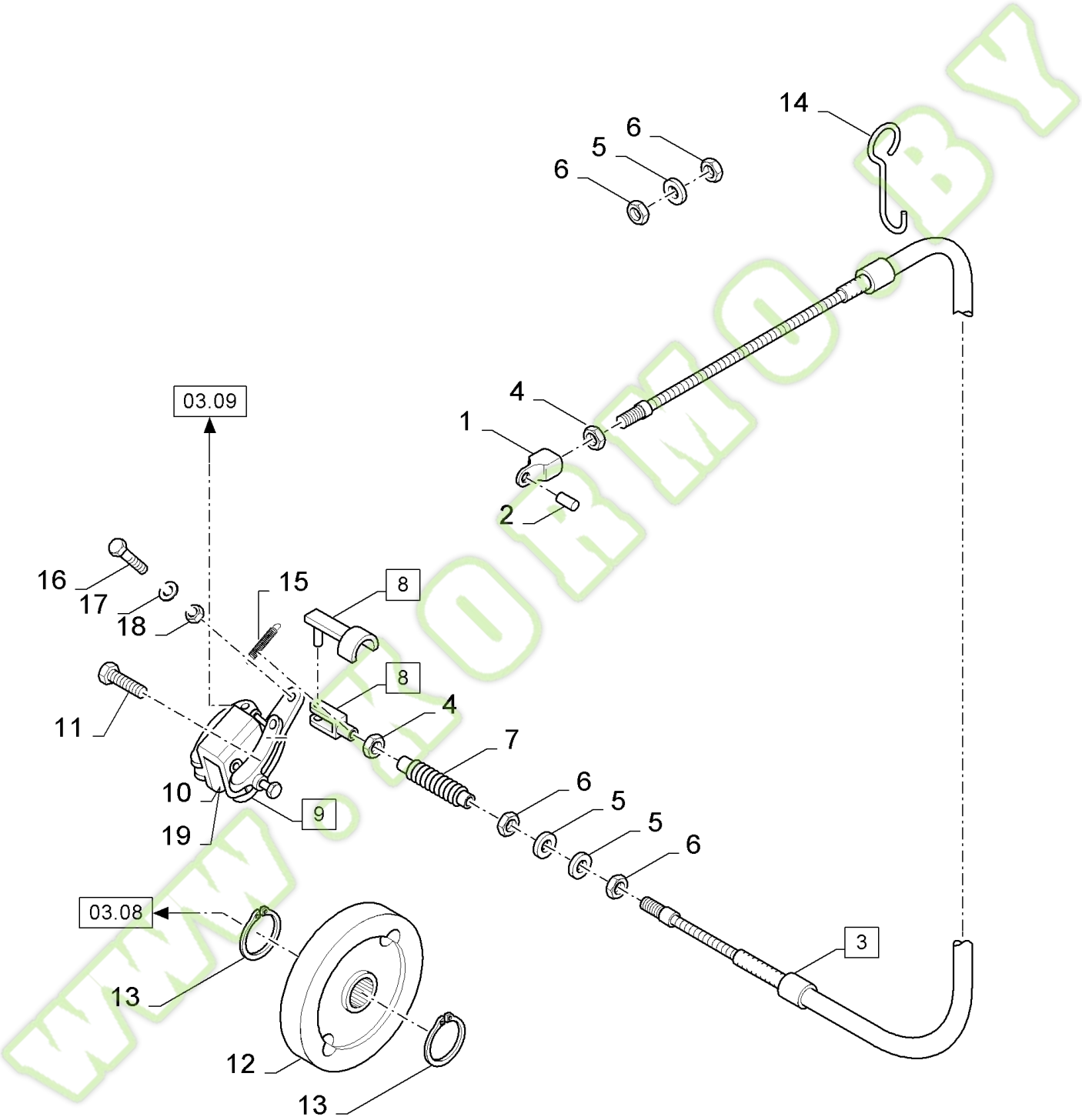

FX50 SELF-PROPELLED FORAGE HARVESTER (10/02-)

03.20(01) TRANSMISSION HANDBRAKE

Ref	Part Number	Qty	Description
1	84005292	1	YOKE,
2	385818	1	PIN, {PP:80385818}
3	84004404	1	CABLE, (4 to 8)
4	84807411	2	NUT, Thin, M10 x 1.5, Cl 04, M10
5	140048	3	WASHER, LOCK, {PP:80140048} Belleville, M16, 16MM
6	364164	4	NUT, {PP:80364164} Thin, M16 x 1.5, Cl 04, M16x1.5
7	84007603	1	PROTECTING COVER,
8	9838355	1	YOKE, {PP:89838355}
9	9819715	1	BRAKE, {PP:89819715} (10,19)
10	9819908	2	BRAKE LINING, {PP:89819908} BRAKE LINING
11	9832986	2	SCREW, {PP:89832986} M10x30
12	9819552	1	BRAKE DISC, {PP:89819552}
13	370006	2	CIRCLIP, {PP:80370006}
14	84011921	1	HOOK,
15	29833	1	SPRING, {PP:80029833}
16	120068	1	SCREW, {PP:80120068} Hex, M10 x 40, 8.8, Full Thd, M10x40
17	378244	1	WASHER, LOCK, {PP:80378244} 10MM
18	100037	1	NUT, {PP:80100037} M10 x 1.5, Cl 8, M10
19	84818224	2	WASHER,

www.KOBMO.BY

03.21(01) DRIVE SHAFTS

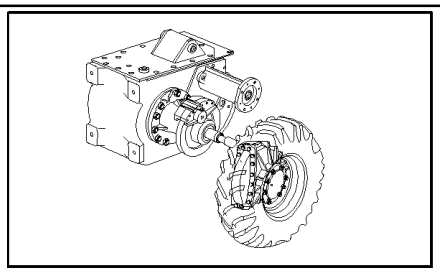

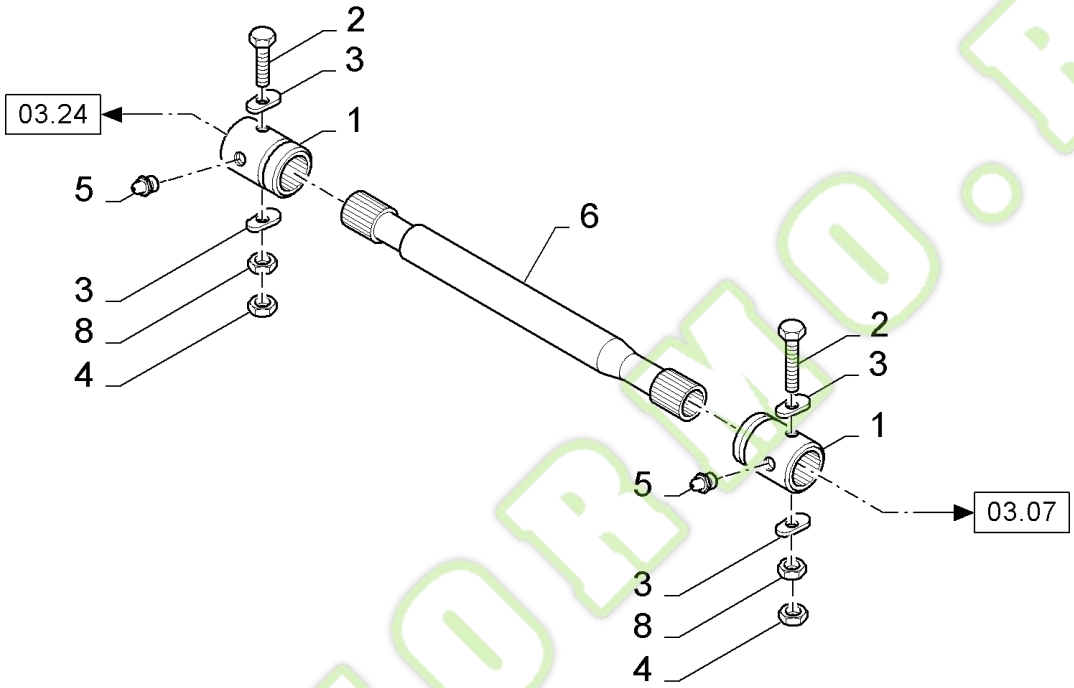

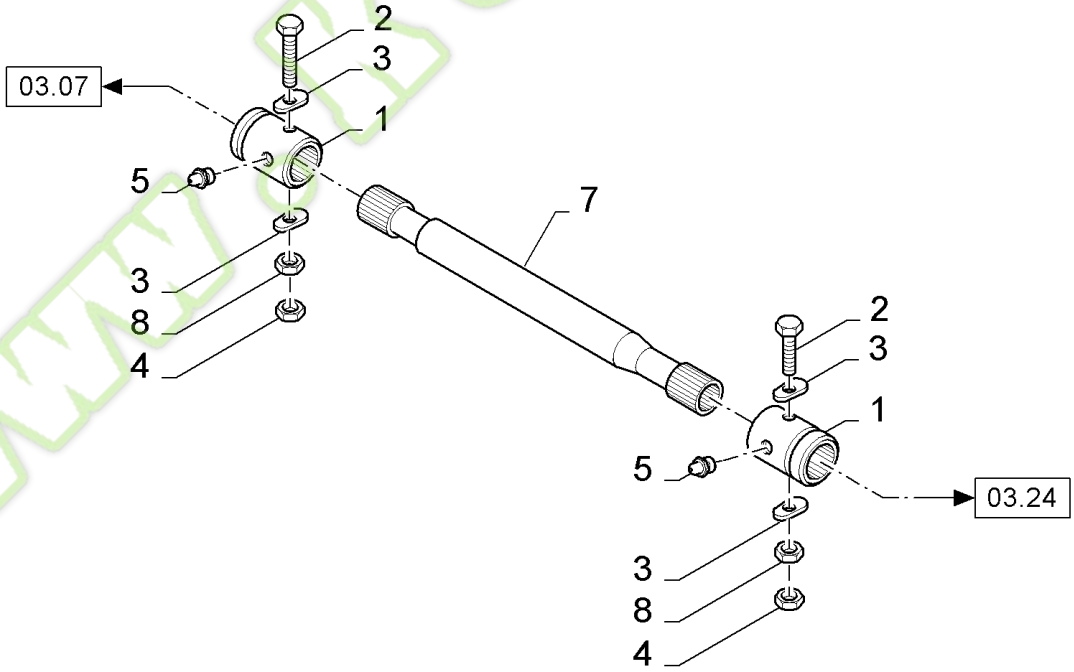

www.KOBMO.BY

FX50 SELF-PROPELLED FORAGE HARVESTER (10/02-)

03.21(01) DRIVE SHAFTS

Ref	Part Number	Qty	Description
1	84077841	4	BUSHING, SPLINED,
2	120073	4	SCREW, {PP:80120073} Hex, M10 x 80, 8.8, M10x80
3	80158013	8	WASHER, 10MM
4	100016	4	NUT, {PP:80100016} M10, Cl 8, M10
5	321204	4	NIPPLE, LUBE, {PP:80321204}
6	84806637	1	SHAFT, LH
7	84806639	1	SHAFT, RH
8	84807411	4	NUT, Thin, M10 x 1.5, Cl 04, M10

WWW.KOBMO.BY

03.22(01) EXTENSION KIT

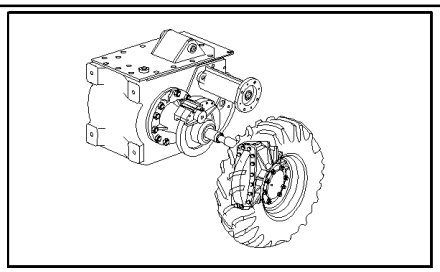

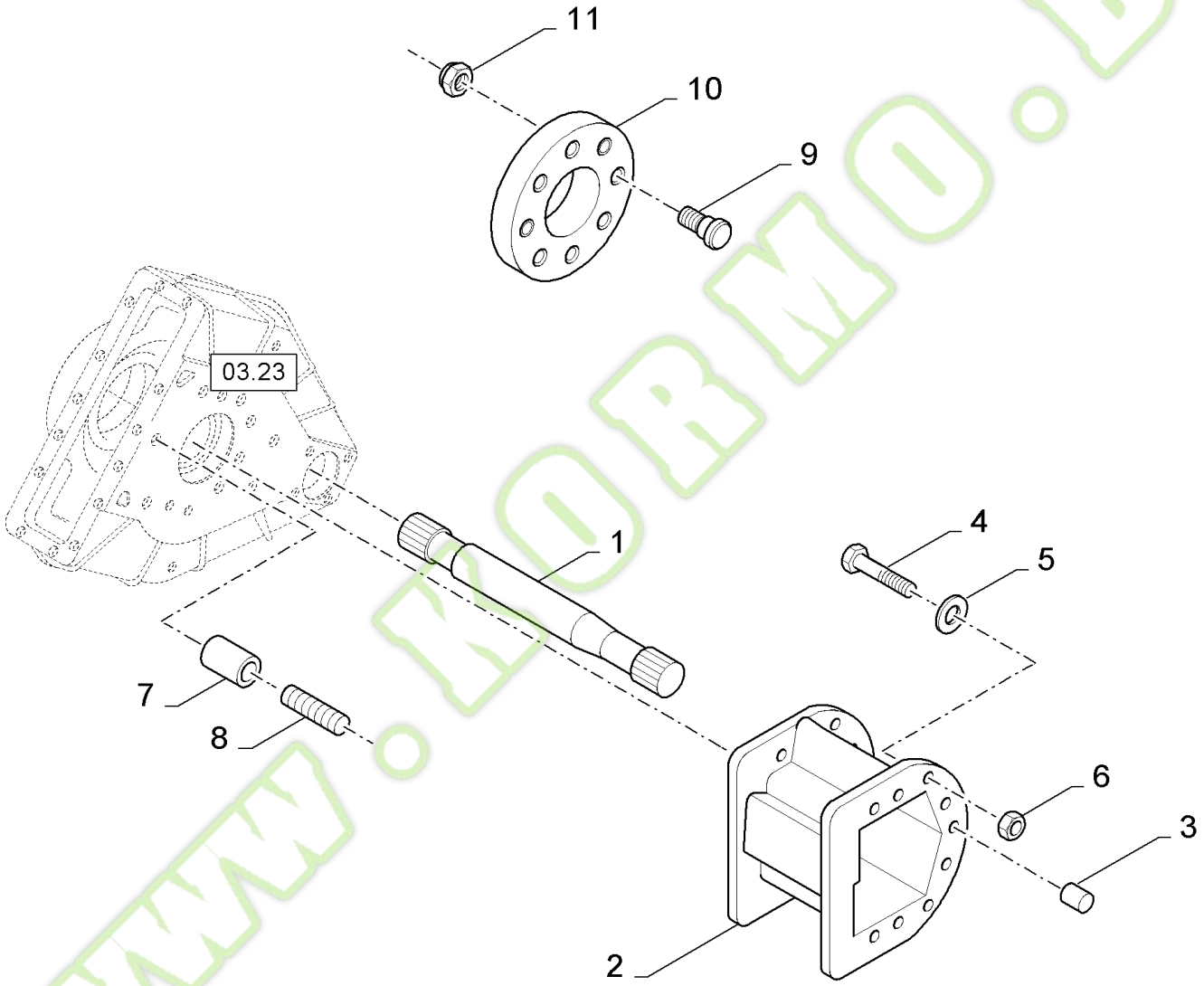

www.robmo.by

FX50 SELF-PROPELLED FORAGE HARVESTER (10/02-)

03.22(01) EXTENSION KIT

Ref	Part Number	Qty	Description
1	84607993	1	SHAFT, CONTROL, LH
1	84607985	1	SHAFT, CONTROL, RH
2	84437714	2	SUPPORT,
3	9838201	4	PIN, {PP:89838201}
4	80374890	14	SCREW, M20x60
5	322359	14	WASHER, LOCK, {PP:80322359} Belleville, M20, 20MM
6	9706694	14	NUT, {PP:89706694} M20, Cl 8, M20
7	84035318	2	BUSHING,
8	84045622	2	STUD,
9	330291	16	BOLT, {PP:80330291} , FOR NA ONLY, FOR FX30-40-60 ONLY
10	84444509	2	FLANGE, , FOR NA ONLY, FOR FX30-40-60 ONLY
11	748961	16	NUT, {PP:80748961} , FOR NA ONLY, FOR FX30-40-60 ONLY

www.KOBMO.BY

03.23(01) END REDUCTION 10/75

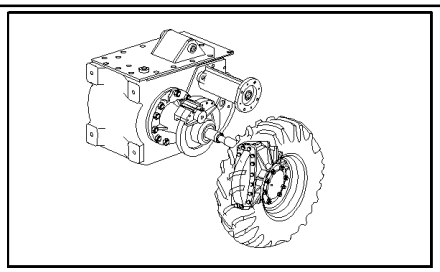

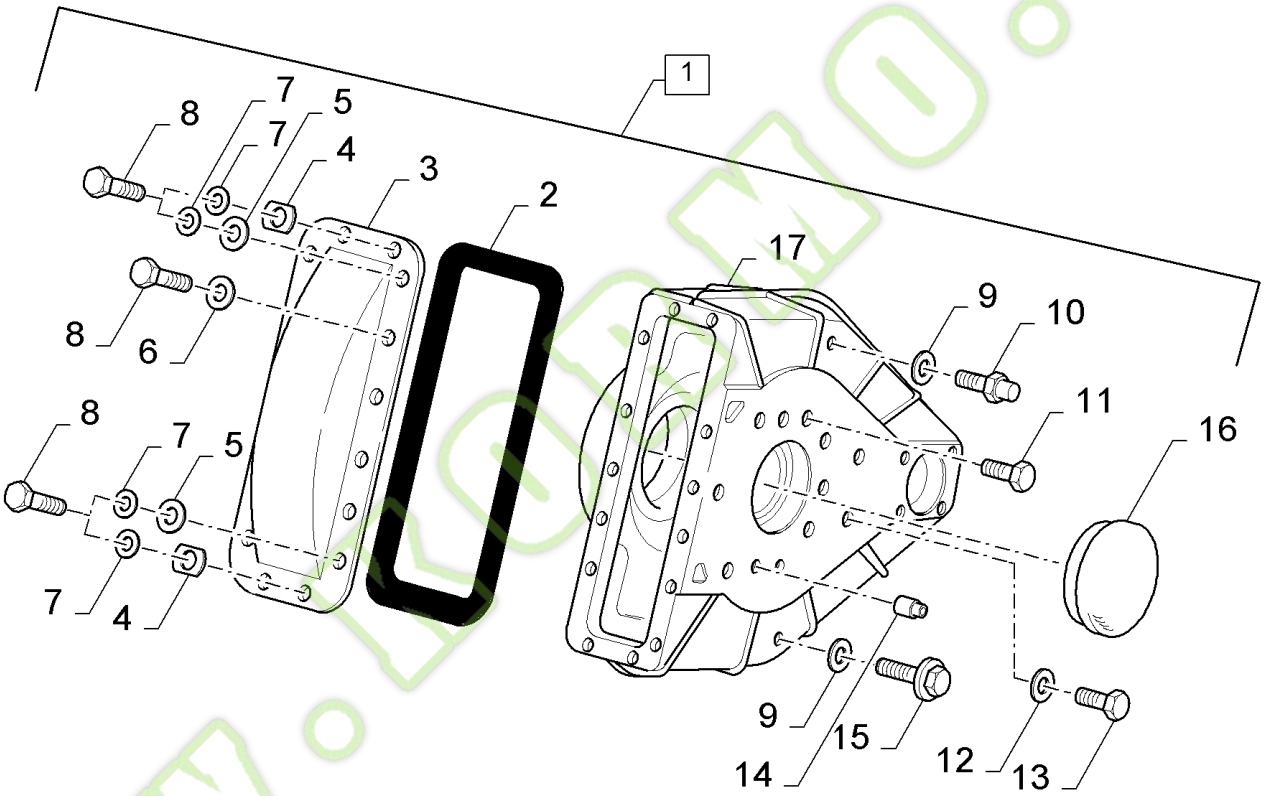

www.kobmo.by

FX50 SELF-PROPELLED FORAGE HARVESTER (10/02-)

03.23(01) END REDUCTION 10/75

Ref	Part Number	Qty	Description
1	84817059	2	GEAR REDUCTION UNIT, (2 to 17, Fig. 09.23), FOR FX30 ONLY
1	84806635	2	GEAR REDUCTION UNIT, (2 to 17, Fig. 09.23), FOR FX40-50-60 ONLY
2	445497	2	GASKET, {PP:80445497}
3	84806647	2	COVER,
4	743794	8	WASHER, {PP:80743794}
5	140042	8	WASHER, LOCK, {PP:80140042} M10 x 34 x 3,
6	394629	16	WASHER, LOCK, {PP:80394629} 10MM
7	140045	28	WASHER, LOCK, {PP:80140045} Belleville, M10, 10MM
8	43138	32	SCREW, {PP:80043138} Hex, M10 x 20, 8.8, Full Thd, M10x20
9	220025	4	GASKET, {PP:80220025}
10	386287	2	BREATHER, {PP:80386287}
11	9512573	16	SCREW, {PP:89512573} Hex, M20 x 40, 10.9, M20x40
12	9511034	4	GASKET, {PP:89511034}
13	412413	4	PLUG, {PP:80412413}
14	918737	4	PIN, {PP:80918737}
15	336897	2	PLUG, {PP:80336897}
16	9833630	2	COVER, {PP:89833630}
17	84817056	2	HOUSING, , FOR FX30 ONLY
17	84806645	2	HOUSING, FINAL DRIVE, , FOR FX40-50-60 ONLY

www.KOBMO.BY

03.24(01) END REDUCTION 10/75

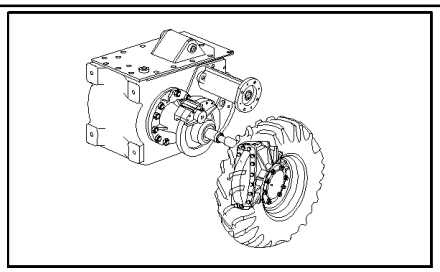

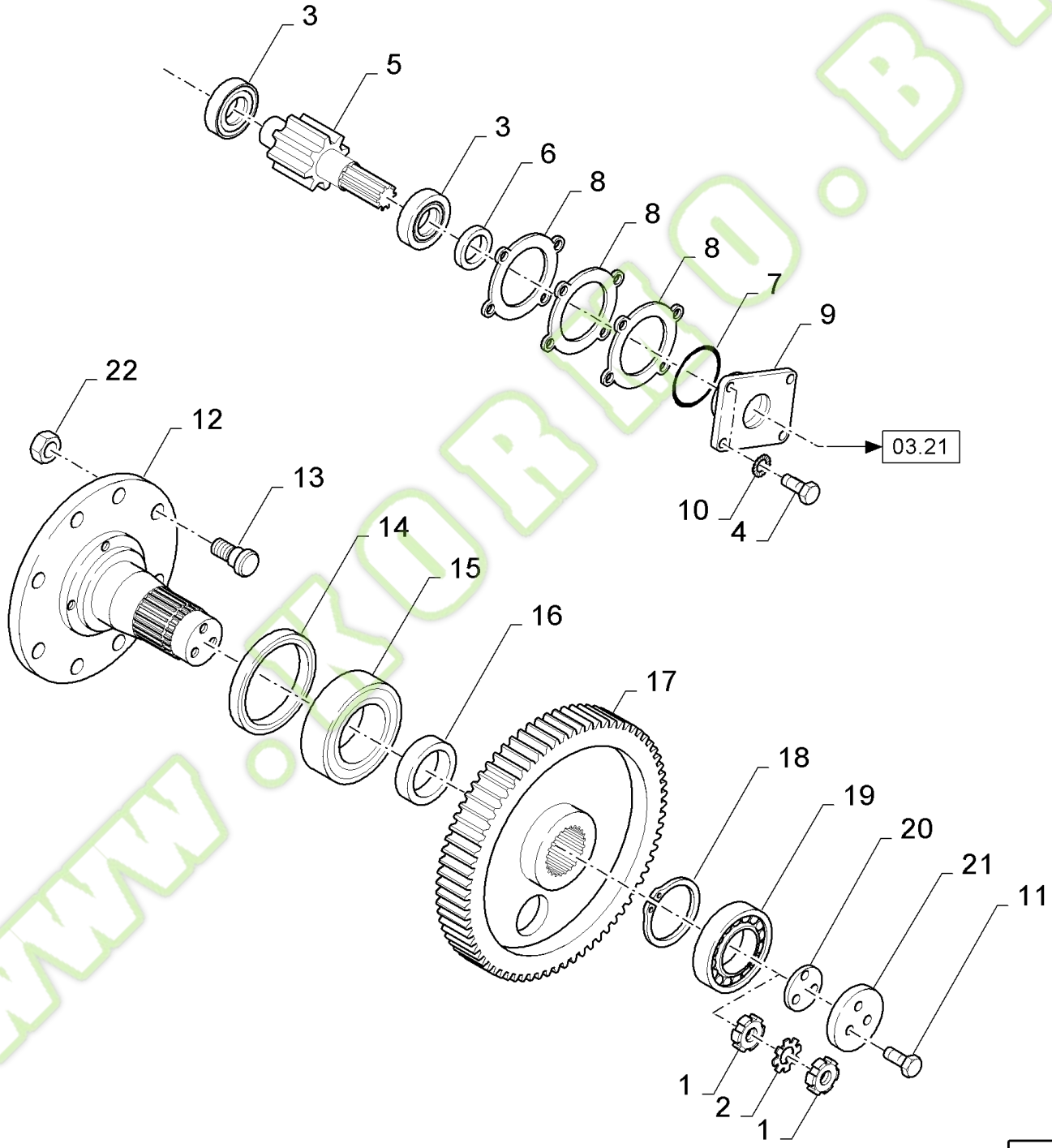

www.KOBELO.BY

FX50 SELF-PROPELLED FORAGE HARVESTER (10/02-)

03.24(01) END REDUCTION 10/75

Ref	Part Number	Qty	Description
1	9811129	4	NUT, {PP:89811129} , FOR FX40-50-60 ONLY
2	9838325	2	PLATE, {PP:89838325} , FOR FX40-50-60 ONLY
3	9832269	4	BEARING ASSY, {PP:89832269}
4	43140	AR	BOLT, {PP:80043140} Hex, M10 x 30, 8.8, M10x30, NOT FOR NA
5	9832292	2	SHAFT, {PP:89832292}
6	381860	2	SEAL, {PP:80381860}
7	381895	2	O-RING, {PP:80381895}
8	382948	AR	SHIM, {PP:80382948} THK.:0.05MM
8	382949	AR	SHIM, {PP:80382949} THK.:0.2MM
8	382950	AR	SHIM, {PP:80382950} THK.:0.5MM
9	9833631	2	FLANGE, {PP:89833631}
10	140045	AR	WASHER, LOCK, {PP:80140045} Belleville, M10, 10MM
11	84443546	6	SCREW, M16x35, FOR FX30 ONLY
12	84817058	2	FLANGE, , FOR FX30 ONLY
12	9818675	2	FLANGE, {PP:89818675} , FOR FX40-50-60 ONLY
13	330291	16	BOLT, {PP:80330291}
14	381856	2	SEAL, {PP:80381856} , FOR FX30 ONLY
14	9832264	2	RING, {PP:89832264} , FOR FX40-50-60 ONLY
15	384142	2	BEARING ASSY, {PP:80384142} , FOR FX30 ONLY
15	9832271	2	BEARING ASSY, {PP:89832271} , FOR FX40-50-60 ONLY
16	922092	2	SPACER, {PP:80922092} , FOR FX30 ONLY
16	9832274	2	BUSHING, {PP:89832274} , FOR FX40-50-60 ONLY
17	9502657	2	GEAR, {PP:89502657}
18	300639	2	RING, SNAP, {PP:80300639}
19	9832270	2	BEARING ASSY, {PP:89832270}
20	395391	AR	SHIM, {PP:80395391} THK.:0.05MM, FOR FX30 ONLY
20	395392	AR	SHIM, {PP:80395392} THK.:0.2MM, FOR FX30 ONLY
20	395393	AR	SHIM, {PP:80395393} THK.:0.5MM, FOR FX30 ONLY
21	382503	2	FLANGE, {PP:80382503} , FOR FX30 ONLY
22	748961	16	NUT, {PP:80748961} M22x1.5

www.ecemo.by

FRONT AXLE	ESSIEU AVANT	EJE DELANTERO	FORAKSEL
ASSALE ANTERIORE	VORDERACHSE	EIXO DIANTIERO	VOORAS

SEC. 4

NOT APPLICABLE FOR THIS CATALOGUE
NON APPLICABILE PER QUESTO CATALOGO
PAS APPLICABLE POUR CE CATALOGUE
NICHT ANWENDBAR FÜR DIESEN KATALOG
NO APLICABLE PARA ESTE CATÁLOGO
NÃO APPLICABLE PARA NESTE CATÁLOGO
IKKE APLIKABEL FOR DENNE KATALOG
NIET VAN TOEPASSING VOOR DEZE CATALOGUS

www.kemo.by

04.000(01) SECTION LIST 4

Ref	Part Number	Qty	Description

www.KOBMO.BY

REAR AXLE	**ESSIEU POSTÉRIEUR**	**EJE POSTERIOR**	**MANCANTE**
ASSALE POSTERIORE	**HINTERACHSE**	**PONTE TRASEIRO**	**ACHTERAS**

SEC. 5

2 WD, FIXED
05.01 - 05.02

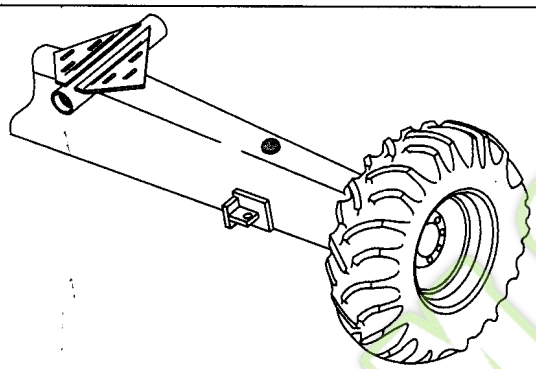

4 WD
05.03 → 05.13

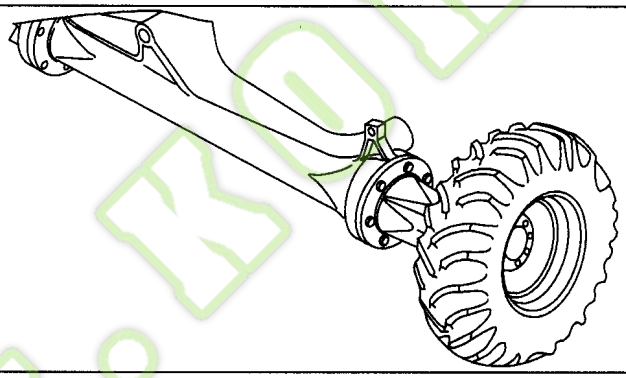

2 WD, ADJUSTABLE
05.14 - 05.15 - 05.16

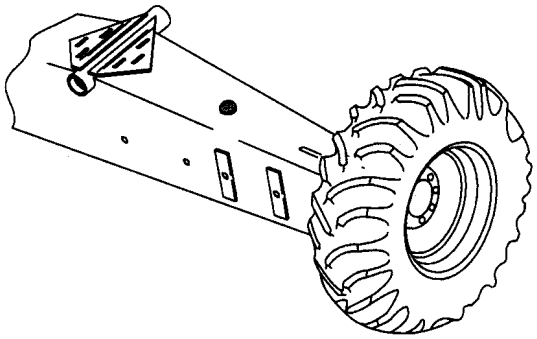

www.KOBMO.BY

05.000(01) SECTION LIST 5

Ref	Part Number	Qty	Description

WWW.KORMO.BY

05.01(01) FIXED STEERING AXLE

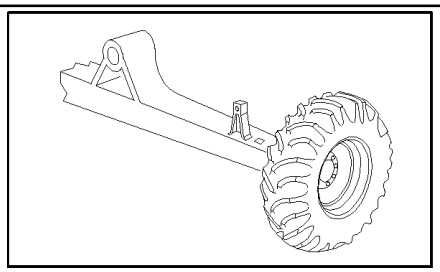

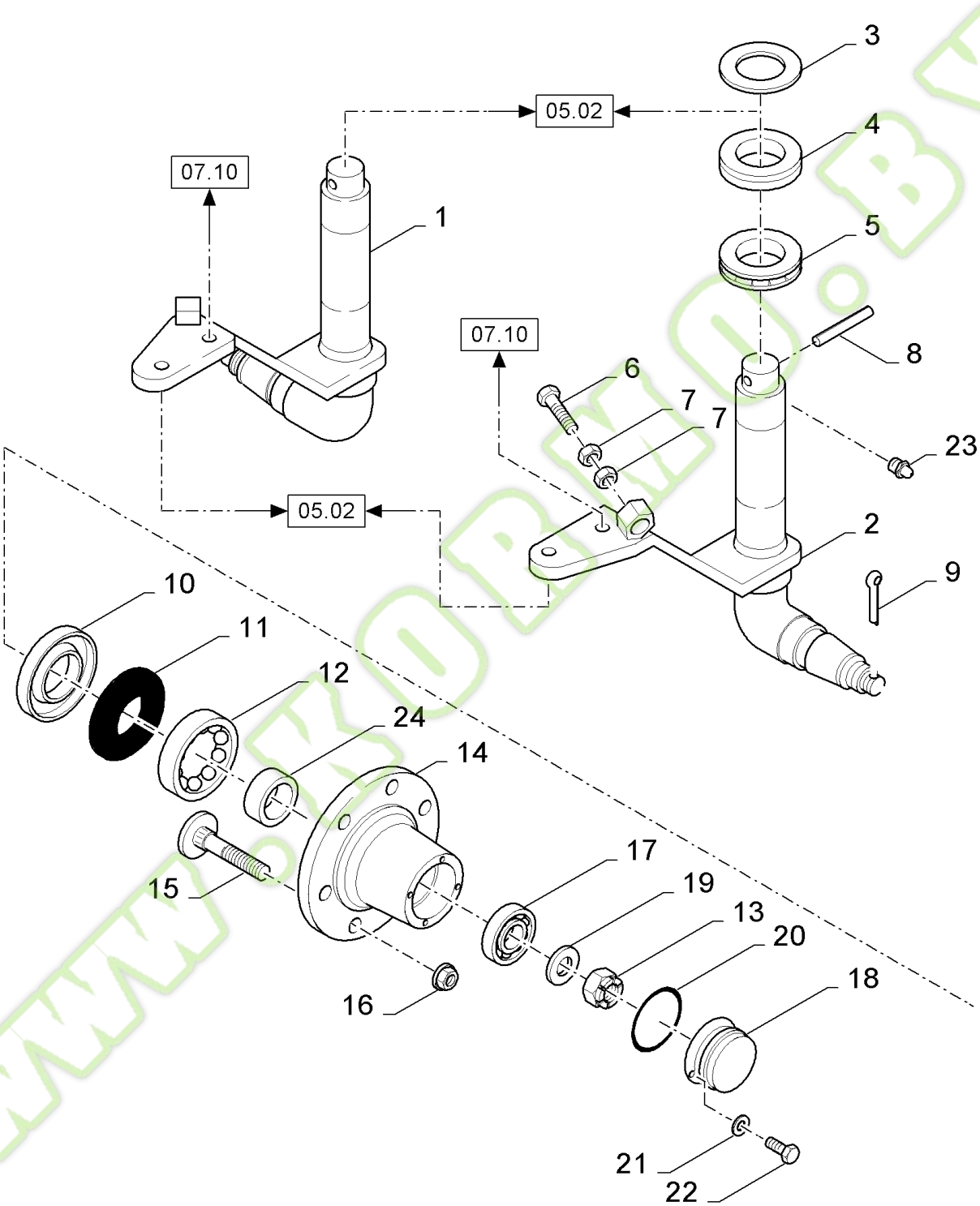

WWW.KOBMOB.BY

FX50 SELF-PROPELLED FORAGE HARVESTER (10/02-)

05.01(01) FIXED STEERING AXLE

Ref	Part Number	Qty	Description
1	84444421	1	SPINDLE, RH
2	84444423	1	SPINDLE, LH
3	84814169	2	WASHER, LOCK,
4	357732	2	BEARING, ROLLER CAGE, {PP:80357732}
5	301202	2	BEARING ASSY, {PP:80301202}
6	86629541	2	BOLT, Hex, M12 x 40, 8.8, Full Thd, M12x40
7	89706685	4	NUT, M12
8	62218	2	PIN, {PP:80062218} M10 x 75, Slotted,
9	130011	2	PIN, SPLIT (COTTER), {PP:80130011} M5 x 40,
10	357733	2	CAP, FLANGE COVER, {PP:80357733}
11	357240	2	ELEMENT, SEALING, {PP:80357240}
12	199955	2	BEARING, CUP, {PP:80199955}
13	309090	2	NUT, {PP:80309090} M24 x 1.5, Cl 8, M24x1.5
14	84444443	2	HUB,
15	9835360	12	BOLT, {PP:89835360}
16	9817961	12	NUT, {PP:89817961} M14x1.5
17	9817852	2	BEARING ASSY, {PP:89817852}
18	84444441	2	COVER,
19	304060	2	WASHER, {PP:80304060}
20	743583	2	ELEMENT, SEALING, {PP:80743583}
21	322357	8	WASHER, LOCK, {PP:80322357} Belleville, M6, Belleville, M6
22	86508568	8	SCREW, Hex, M6 x 16, 8.8, M6x16
23	323713	4	NIPPLE, LUBE, {PP:80323713}
24	199954	2	BEARING, CONE, {PP:80199954}

www.KOLMO.BY

05.02(01) FIXED STEERING AXLE

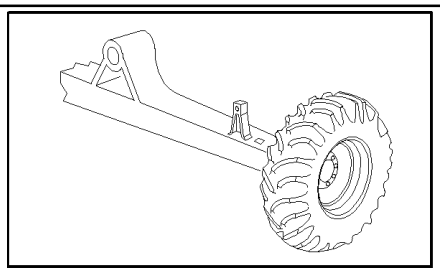

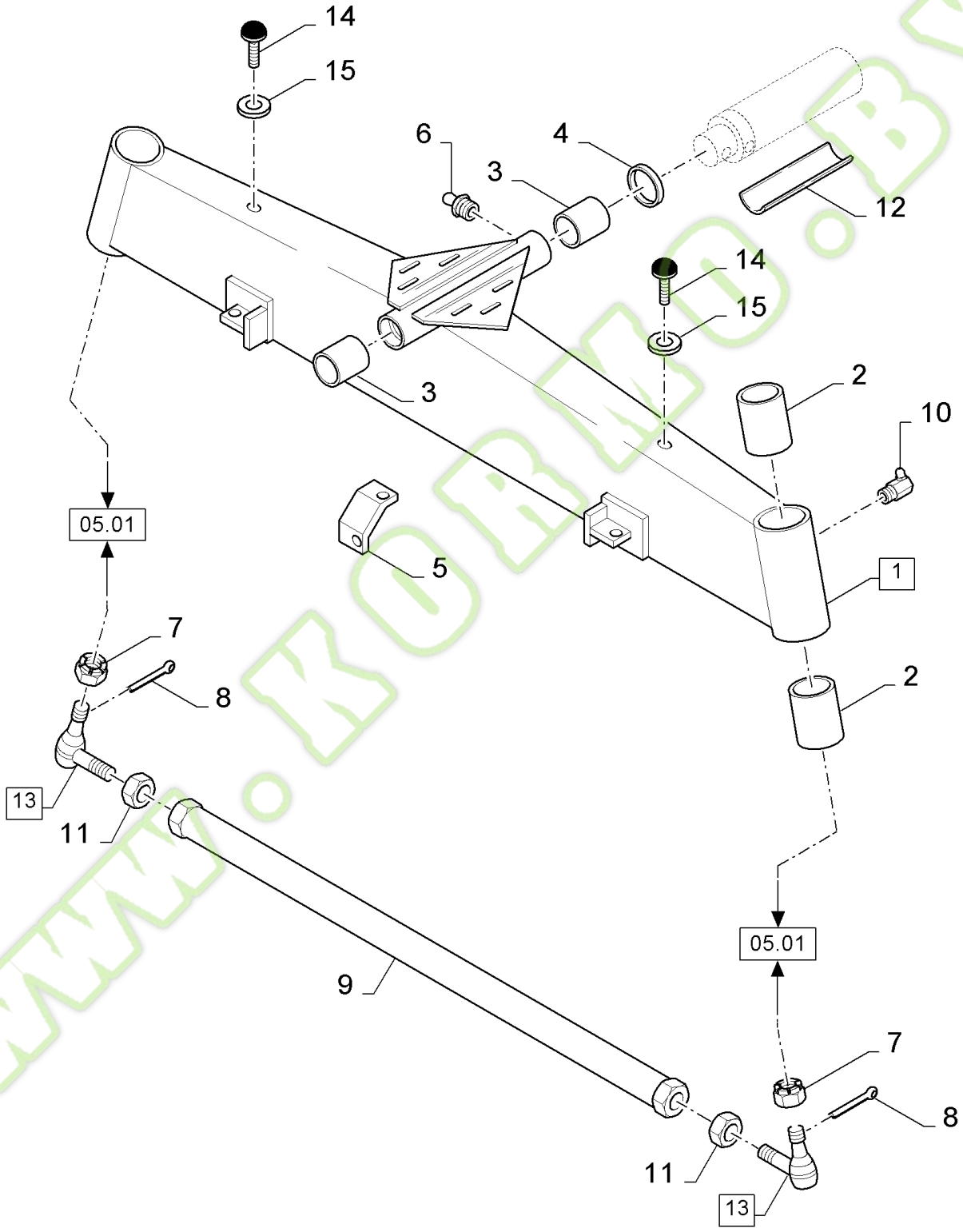

www.KOBMO.BY

FX50 SELF-PROPELLED FORAGE HARVESTER (10/02-)

05.02(01) FIXED STEERING AXLE

Ref	Part Number	Qty	Description
1	84444481	1	AXLE, FRONT, (2,3)
2	84062271	4	BUSHING,
3	357500	2	SLEEVE, {PP:80357500}
4	84005527	AR	WASHER,
5	84444436	4	PLATE, COVER,
6	321204	1	NIPPLE, LUBE, {PP:80321204}
7	412103	2	NUT, {PP:80412103} M18x1.5
8	412685	2	PIN, SPLIT (COTTER), {PP:80412685} M4 x 32,
9	84444479	1	ROD,
10	323713	4	NIPPLE, LUBE, {PP:80323713}
11	331209	2	NUT, {PP:80331209} 13/16"-16, G2, 13/16"
12	84032751	1	PLATE,
13	84444425	2	BALL JOINT, (7,8)
14	190029	2	INSULATOR BLOCK, {PP:80190029}
15	140083	2	WASHER, {PP:80140083}

www.KOBMO.BY

05.03(01) MECHANICAL 4-WHEEL DRIVE, AXLE

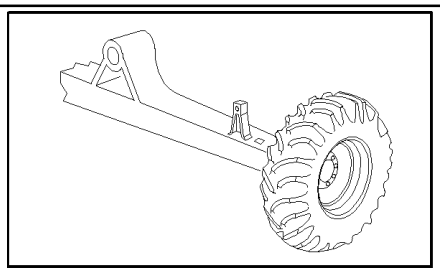

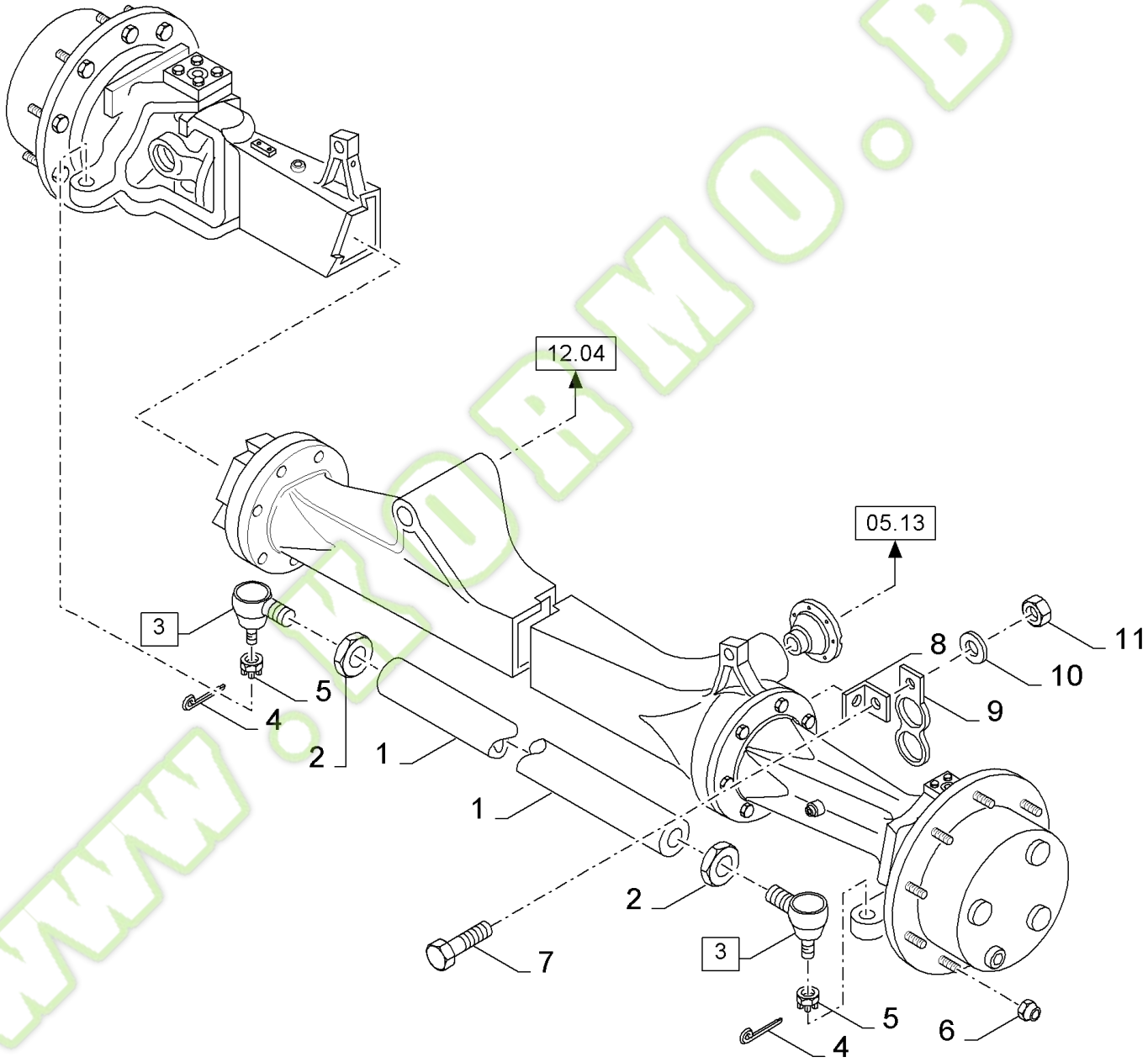

www.ROBMO.BY

FX50 SELF-PROPELLED FORAGE HARVESTER (10/02-)

05.03(01) MECHANICAL 4-WHEEL DRIVE, AXLE

Ref	Part Number	Qty	Description
	84806938	1	AXLE, REAR, Incl. figs. 9.28 (1 to 6) to 9.34
1	84021765	1	ROD,
2	300852	2	NUT, {PP:80300852} M30 x 1.5, Cl 8, M30x1.5
3	84021766	2	BALL JOINT, (4,5)
4	300595	4	PIN, SPLIT (COTTER), {PP:80300595} M4 x 40, D=4x36
5	412144	4	SLOTTED NUT, {PP:80412144} M20 x 1.5, Cl 8, M20x1.5
6	748960	16	NUT, {PP:80748960} M18x1.5
7	80120104	1	SCREW, M8x20
8	84036665	1	SUPPORT,
9	9706732	1	CLAMP, {PP:89706732}
10	322358	1	WASHER, LOCK, {PP:80322358} Belleville, M8, 8MM
11	89706690	1	NUT, CL 8, M8 x 1.25 x 13.0

www.KOBMO.BY

05.04(01) MECHANICAL 4-WHEEL DRIVE, AXLE

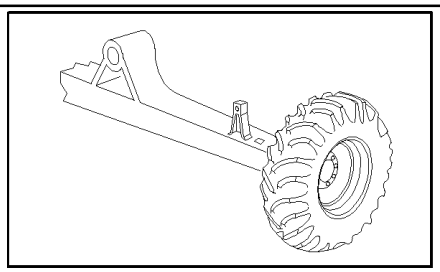

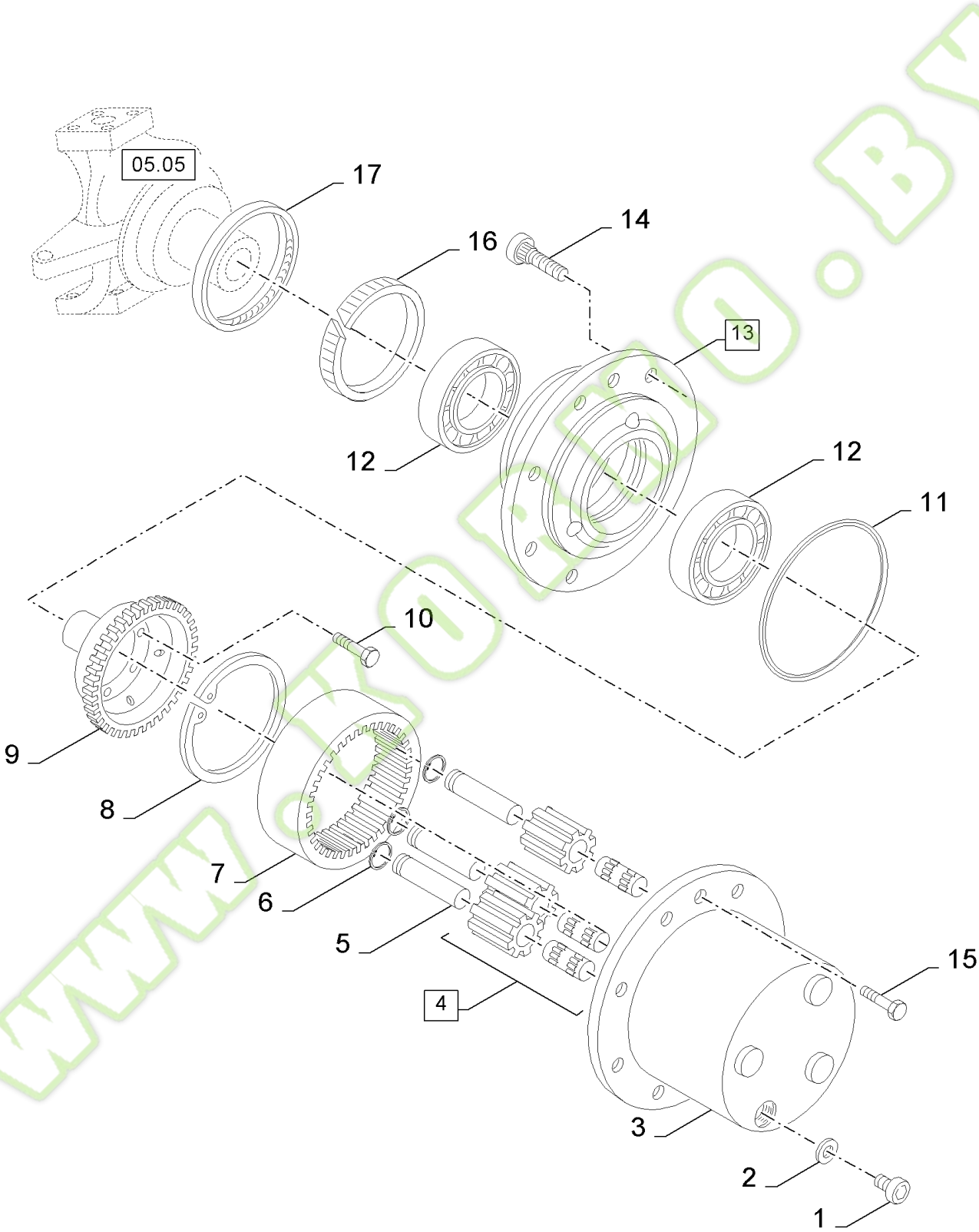

www.kobo.by

FX50 SELF-PROPELLED FORAGE HARVESTER (10/02-)

05.04(01) MECHANICAL 4-WHEEL DRIVE, AXLE

Ref	Part Number	Qty	Description
1	84021767	1	PLUG,
2	84021768	1	RING,
3	84021769	1	HUB,
4	84021770	3	GEAR SET,
5	84021771	3	PIN,
6	84021772	3	CIRCLIP,
7	84021773	1	GEAR,
8	84021774	1	CIRCLIP,
9	84021775	1	GEAR,
10	84078461	12	SCREW, Hex, M10 x 35, 12.9, Full Thd, M10x35
11	84021776	1	O-RING,
12	84021777	2	BEARING ASSY,
13	84053095	1	HUB, (14)
14	84021779	8	BOLT,
15	300441	2	SCREW, {PP:80300441} M10x20
16	84053072	1	GASKET,
17	84053096	1	COVER,

www.KOBMO.BY

05.05(01) MECHANICAL 4-WHEEL DRIVE, AXLE

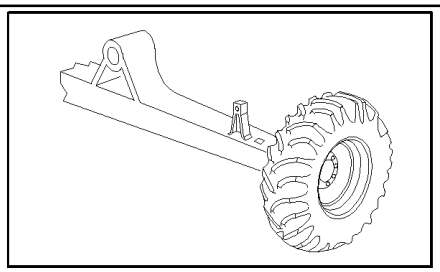

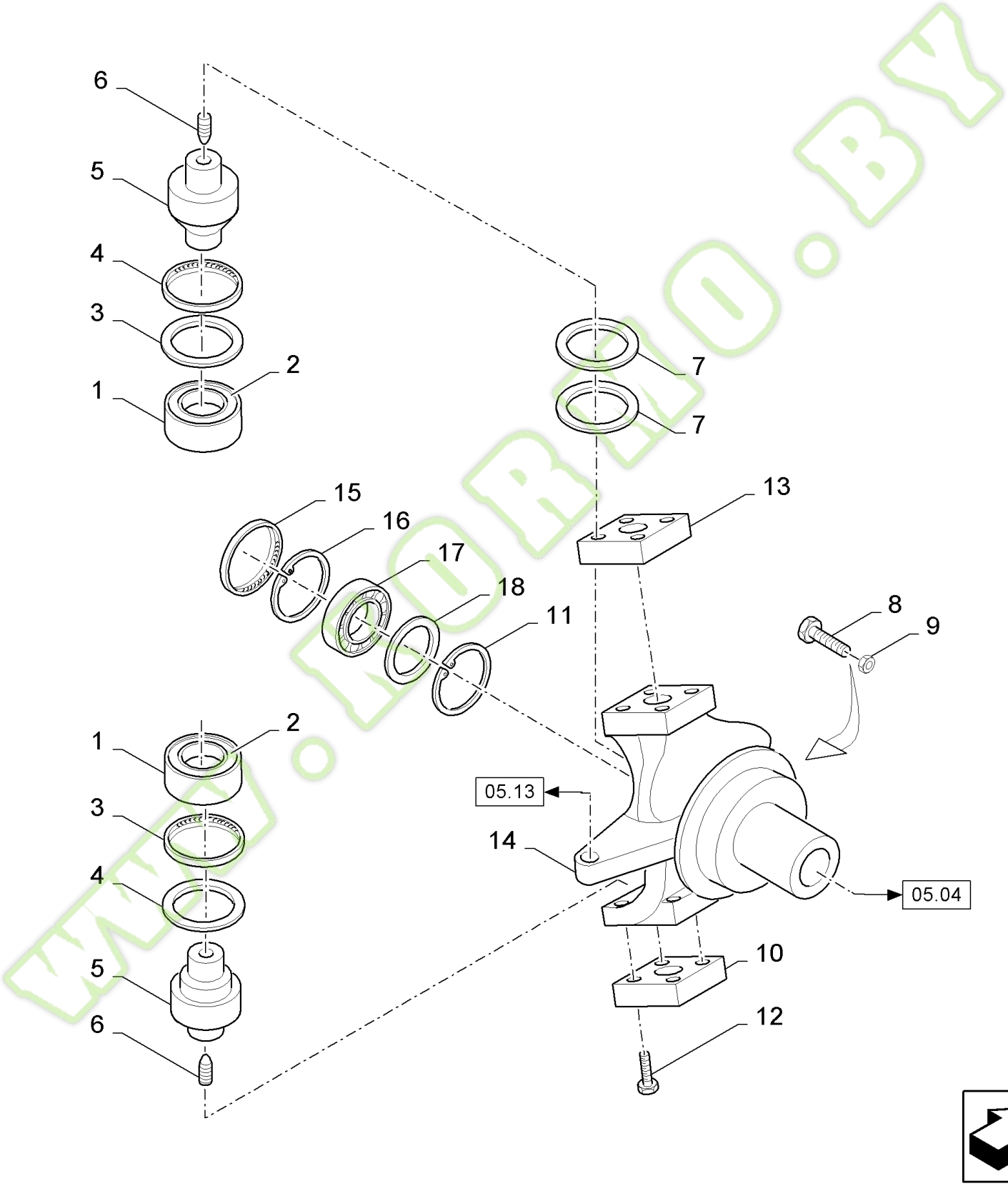

www.kobato.by

FX50 SELF-PROPELLED FORAGE HARVESTER (10/02-)

05.05(01) MECHANICAL 4-WHEEL DRIVE, AXLE

Ref	Part Number	Qty	Description
1	84021785	2	CUP,
2	84021784	2	BEARING, CONE,
3	84021786	2	RING,
4	84021787	2	RING,
5	84021788	2	SPINDLE,
6	300480	4	SCREW, {PP:80300480} Hex Soc, M10 x 12, Cup Pt, M10x12
7	84021789	AR	PLATE, ADJUSTING, THK.:0.5MM
7	84021790	AR	PLATE, ADJUSTING, THK.:0.2MM
8	120090	1	SCREW, {PP:80120090} Hex, M16 x 50, 8.8, Hex, M16 x 50, 8.8
9	100095	1	NUT, {PP:80100095} Thin, M16 x 2, Cl 04, M16x1.5
10	84021791	1	PLATE, COVER,
11	370008	1	CIRCLIP, {PP:80370008} (50X2)
12	86629541	8	BOLT, Hex, M12 x 40, 8.8, Full Thd, M12x40
13	84021792	1	PLATE, COVER,
14	84053097	1	HOUSING, LH
14	84053090	1	HOUSING, RH
15	84021795	1	RING,
16	80300633	1	RING, SNAP, (80x2.5)
17	84021796	1	BEARING ASSY,
18	84021797	1	PLATE, ADJUSTING,

www.KOBMO.BY

05.06(01) MECHANICAL 4-WHEEL DRIVE, AXLE

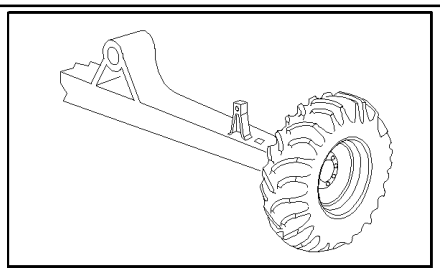

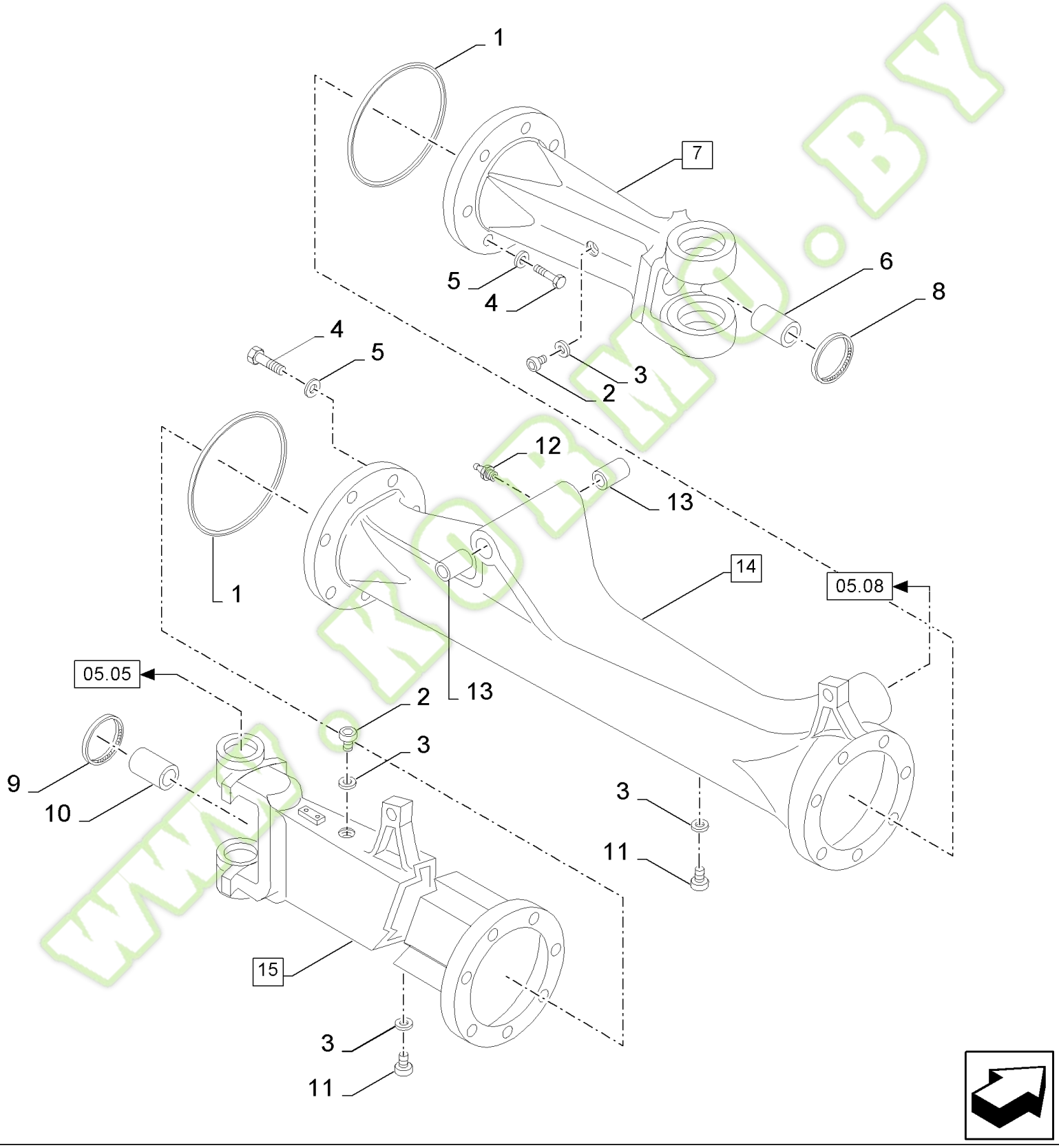

FX50 SELF-PROPELLED FORAGE HARVESTER (10/02-)

05.06(01) MECHANICAL 4-WHEEL DRIVE, AXLE

Ref	Part Number	Qty	Description
1	84021776	2	O-RING,
2	84021799	2	PLUG,
3	84021768	4	RING,
4	440419	26	BOLT, {PP:80440419} Hex, M14 x 55, 8.8, Full Thd, Hex, M14 x 55, 8.8, Full Thd
5	140047	26	WASHER, LOCK, {PP:80140047} 14MM
6	84021801	1	BUSHING,
7	84021802	1	HOUSING, BEARING, (1 to 3,6)
8	84021803	1	RING,
9	84021795	1	RING,
10	84021805	1	BUSHING,
11	84021767	2	PLUG,
12	332038	1	NIPPLE, LUBE, {PP:80332038}
13	84053094	2	BUSHING,
14	84053091	1	AXLE, REAR, (10 to 13)
15	84053092	1	AXLE, REAR, (2,3,11)

www.KOBMO.BY

05.07(01) MECHANICAL 4-WHEEL DRIVE, AXLE

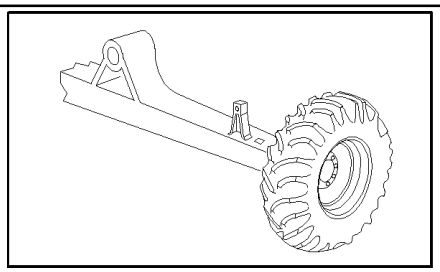

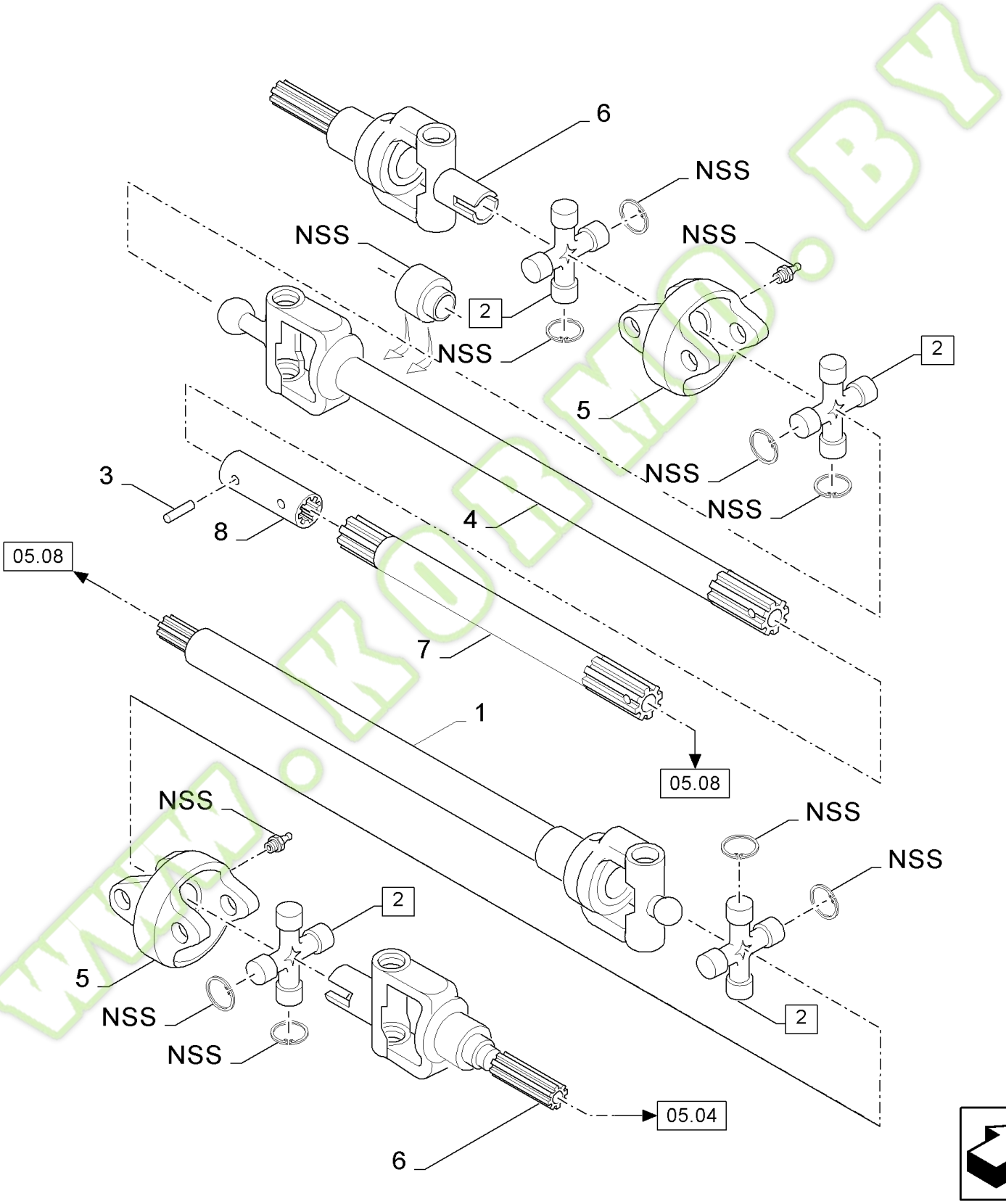

05.07(01) MECHANICAL 4-WHEEL DRIVE, AXLE

Ref	Part Number	Qty	Description
1	84021809	1	SHAFT, CONTROL,
2	84021810	4	SPIDER, (NSS)
3	86977791	2	PIN, ROLL, M8 x 45, Slotted,
4	84021815	1	SHAFT, CONTROL,
5	84021811	1	YOKE,
6	84021812	1	SHAFT, CONTROL,
7	84021813	1	SHAFT, CONTROL,
8	84021814	1	CONNECTOR, HYD.,

www.KOBMO.BY

05.08(01) MECHANICAL 4-WHEEL DRIVE, AXLE

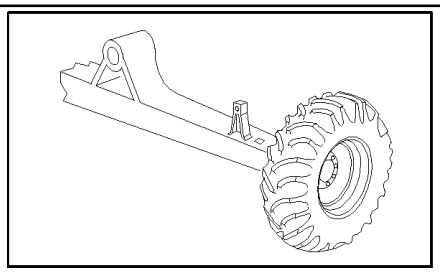

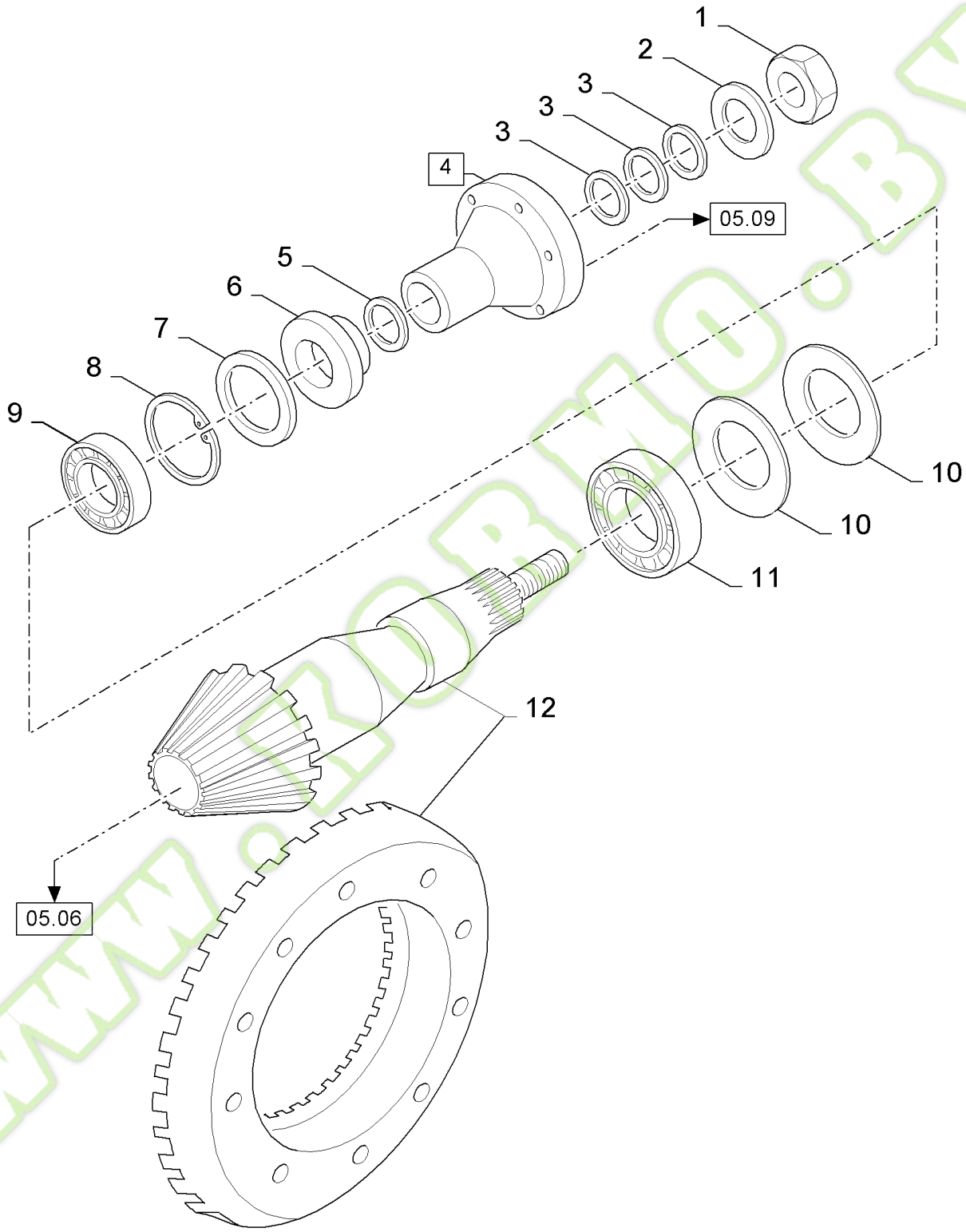

www.robio.by

FX50 SELF-PROPELLED FORAGE HARVESTER (10/02-)

05.08(01) MECHANICAL 4-WHEEL DRIVE, AXLE

Ref	Part Number	Qty	Description
1	84015548	1	NUT, M20 x 1.5, Cl 8.8, M20x1.5
2	84021816	1	WASHER,
3	84021817	AR	PLATE, ADJUSTING, THK.:0.5MM
3	84021818	AR	PLATE, ADJUSTING, THK.:0.2MM
3	84021819	AR	PLATE, ADJUSTING, THK.:0.1MM
4	84021820	1	FLANGE, (6)
5	84021821	1	O-RING,
6	84021822	1	CAP, WASHER,
7	84021823	1	ELEMENT, SEALING,
8	370013	1	RING, SNAP, {PP:80370013}
9	84021824	1	BEARING ASSY,
10	84021825	AR	PLATE, ADJUSTING, THK.:0.5MM
10	84021826	AR	PLATE, ADJUSTING, THK.:0.2MM
11	84021827	1	BEARING ASSY,
12	84021828	1	GEAR SET,

WWW.KOBMO.BY

05.09(01) MECHANICAL 4-WHEEL DRIVE, AXLE

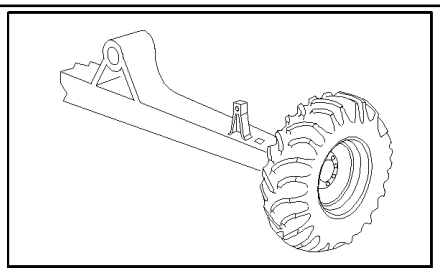

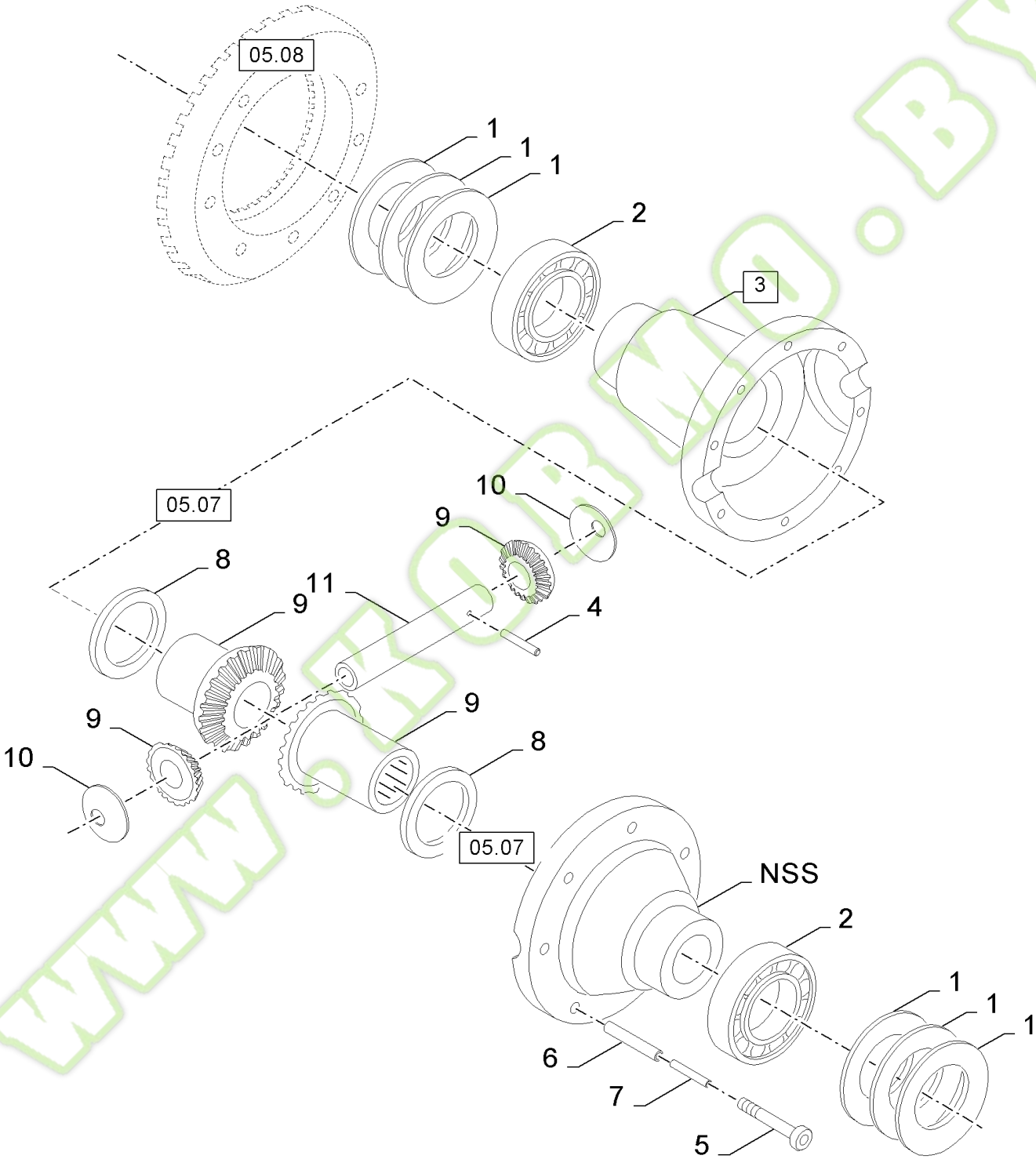

www.kobmo.by

FX50 SELF-PROPELLED FORAGE HARVESTER (10/02-)

05.09(01) MECHANICAL 4-WHEEL DRIVE, AXLE

Ref	Part Number	Qty	Description
	84021837	1	GEAR SET, (8 to 12)
	84021838	1	DIFFERENTIAL, (3,8 to 12)
1	84021829	AR	PLATE, ADJUSTING, THK.:0.5MM
1	84021830	AR	PLATE, ADJUSTING, THK.:0.2MM
1	84021831	AR	PLATE, ADJUSTING, THK.:0.1MM
2	84053093	2	BEARING ASSY,
3	84021962	1	HOUSING, (4 to 7)
4	130045	1	PIN, {PP:80130045} M5 x 26, Slotted,
5	412412	12	SCREW, {PP:80412412} Hex Soc Hd, M10 x 60, 8.8, M12x60
6	62277	4	PIN, {PP:80062277}
7	80412660	4	PIN, ROLL,
8	84021833	2	WASHER,
9	84021834	1	GEAR, BEVEL,
10	84021835	1	WASHER,
11	84021836	1	SPINDLE,

www.KOBMO.BY

05.10(01) MECHANICAL 4-WHEEL DRIVE, GEARBOX

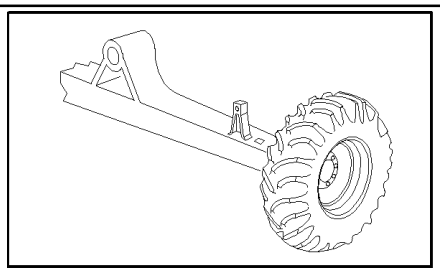

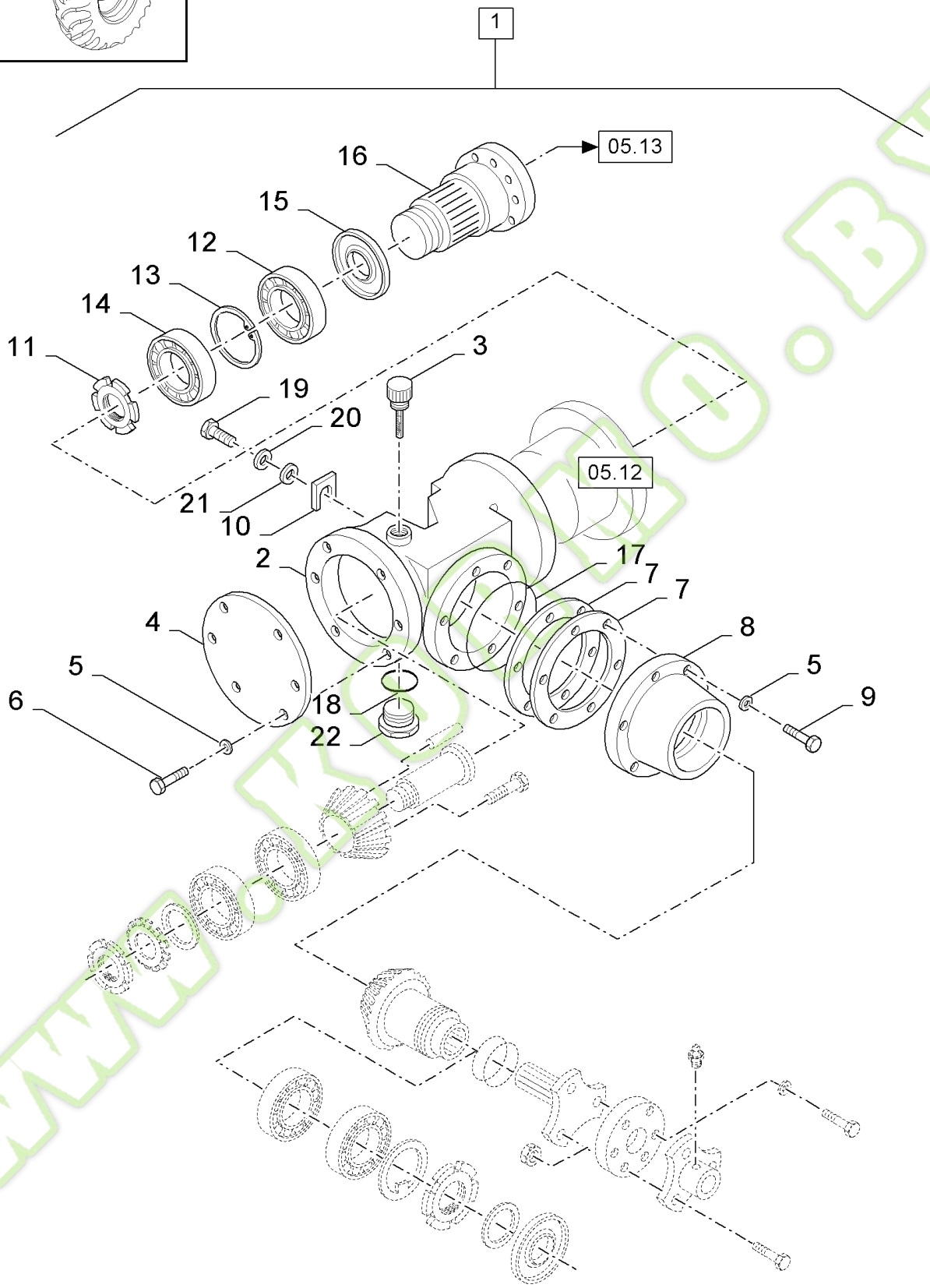

www.kubota.by

FX50 SELF-PROPELLED FORAGE HARVESTER (10/02-)

05.10(01) MECHANICAL 4-WHEEL DRIVE, GEARBOX

Ref	Part Number	Qty	Description
1	84030374	1	GEARBOX, (2 to 22,Fig.09.36 and 09.37)
2	84007400	1	HOUSING,
3	84041252	1	INDICATOR,
4	84011649	1	COVER,
5	322358	12	WASHER, LOCK, {PP:80322358} Belleville, M8, 8MM
6	80120104	6	SCREW, M8x20
7	84011768	AR	SHIM, THK.:0.15MM
7	84011769	AR	SHIM, THK.:0.20MM
7	84011770	AR	SHIM, THK.:0.30MM
8	84022864	1	FLANGE,
9	43127	6	BOLT, {PP:80043127} Hex, M8 x 25, 8.8, M8x25
10	84023895	AR	SHIM,
10	86900823	AR	SHIM, THK.:0.6MM
11	412351	1	NUT, {PP:80412351} M35x1.5
12	86577044	1	BEARING ASSY,
13	382103	1	CIRCLIP, {PP:80382103}
14	84438713	1	BEARING ASSY,
15	84036438	1	RING,
16	84036333	1	SHAFT,
17	84022826	1	O-RING,
18	220049	1	GASKET, {PP:80220049}
19	80337563	4	SCREW, M12x40
20	140046	4	WASHER, LOCK, {PP:80140046} Belleville, M12, 12MM
21	80395606	4	WASHER,
22	366298	1	PLUG, DRAIN, {PP:80366298}

www.KORMO.BY

05.11(01) MECHANICAL 4-WHEEL DRIVE, GEARBOX

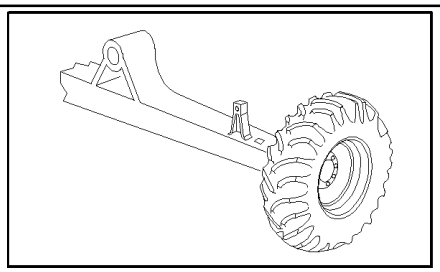

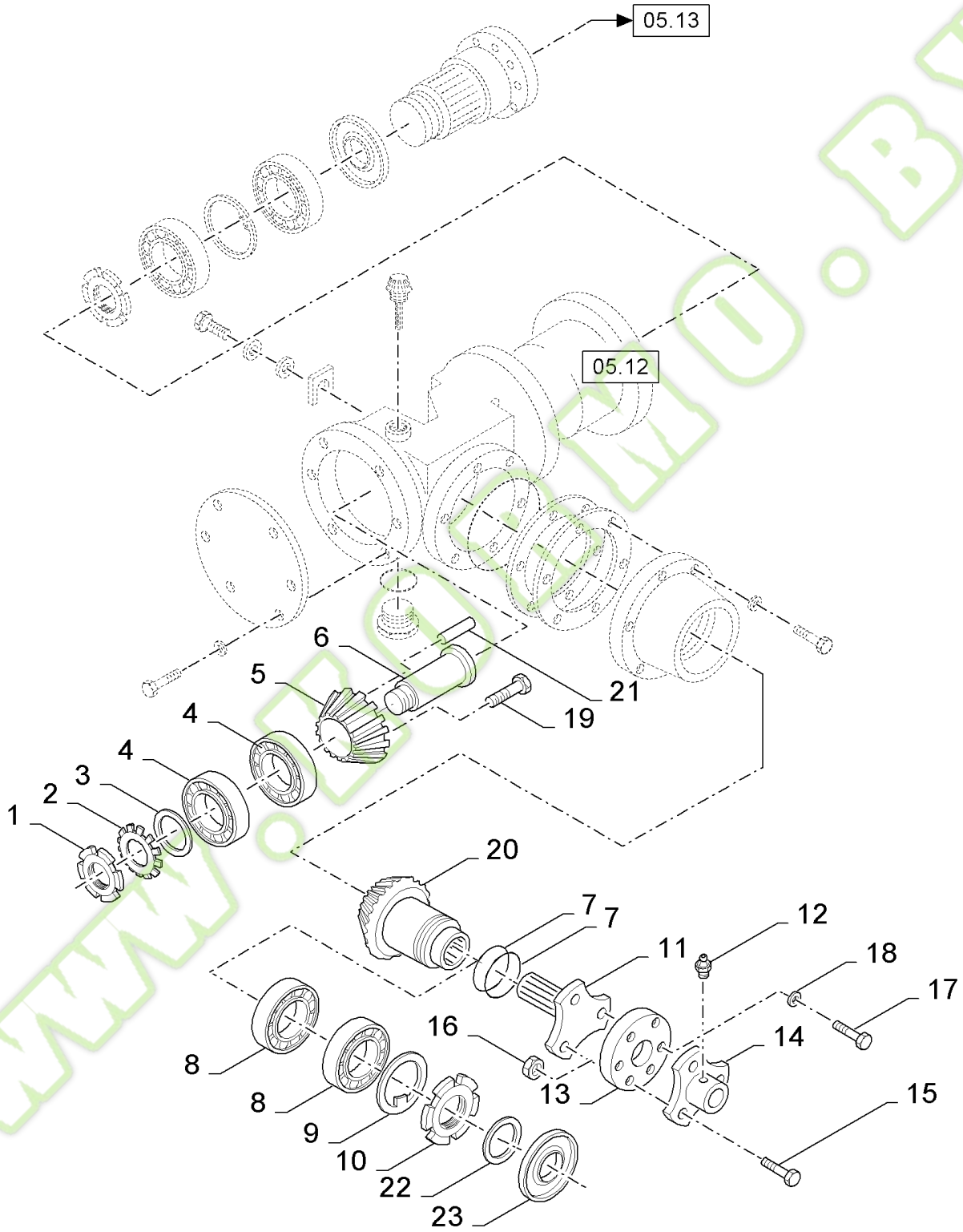

www.BOGMO.BY

FX50 SELF-PROPELLED FORAGE HARVESTER (10/02-)

05.11(01) MECHANICAL 4-WHEEL DRIVE, GEARBOX

Ref	Part Number	Qty	Description
1	80394922	1	NUT, M30x1.5
2	84037274	1	WASHER, LOCK,
3	84037279	1	WASHER,
4	80564362	2	BEARING ASSY,
5	84032469	1	GEAR,
6	84036330	1	SPINDLE,
7	84037188	2	O-RING,
8	853116	2	BEARING ASSY, {PP:80853116}
9	37426	1	WASHER, LOCK, {PP:80037426}
10	9615770	1	NUT, {PP:89615770} M55x1.5
11	84036331	1	SHAFT,
12	321204	1	NIPPLE, LUBE, {PP:80321204}
13	80447341	1	JOINT, UNIVERSAL,
14	84022828	1	FLANGE,
15	120122	3	SCREW, {PP:80120122} Hex, M12 x 50, 8.8, Full Thd, M12x50
16	100038	3	NUT, LOCK, {PP:80100038} M12 x 1.75, Cl 8, M12
17	80337563	3	SCREW, M12x40
18	140046	3	WASHER, LOCK, {PP:80140046} Belleville, M12, 12MM
19	84012852	6	SCREW, Hex Soc Hd, M8 x 16, 8.8, M8x16
20	84022877	1	GEAR,
21	84036329	2	PIN,
22	84036328	1	RING,
23	84022860	1	GASKET,

www.KORMO.BY

05.12(01) MECHANICAL 4-WHEEL DRIVE, CLUTCH

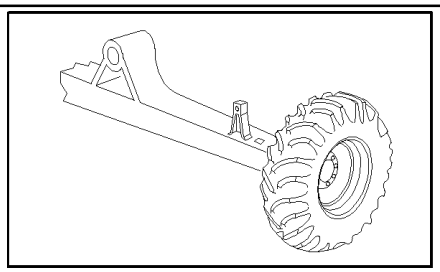

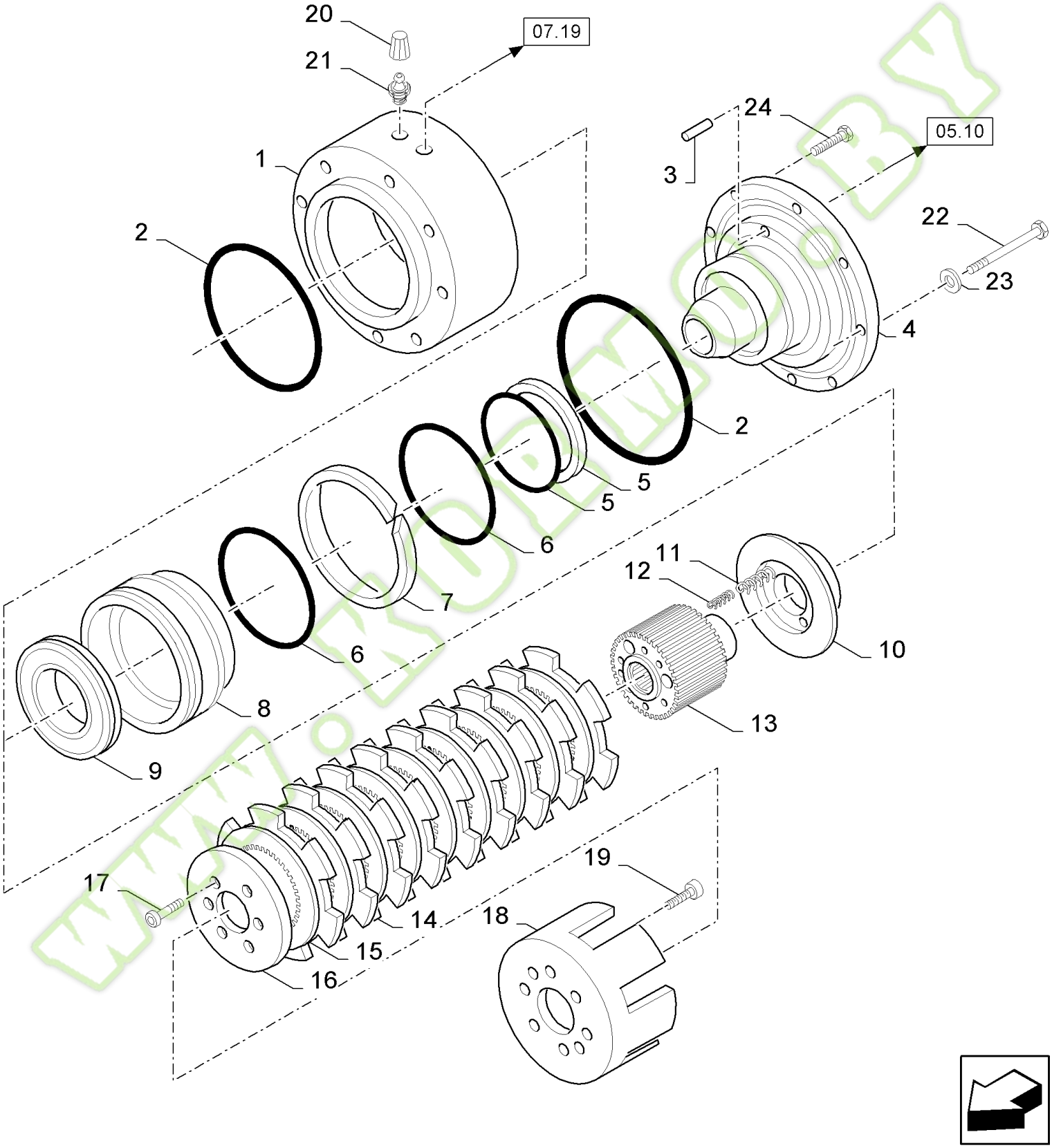

05.12(01) MECHANICAL 4-WHEEL DRIVE, CLUTCH

Ref	Part Number	Qty	Description
	84036532	1	CLUTCH, (1 to 19)
1	84036641	1	HOUSING,
2	84021842	2	O-RING,
3	84032150	2	PIN,
4	84036644	1	HUB,
5	84036647	1	RING, , O-RING INSIDE SQUARE RING
6	84036645	2	RING,
7	84036648	1	RING,
8	84036642	1	HUB,
9	84036650	1	BEARING ASSY,
10	84036643	1	HUB,
11	84021850	9	SPRING,
12	84021851	9	SPRING,
13	84036640	1	ROTOR,
14	84021853	7	DISC,
15	84021854	8	DISC,
16	84021855	1	FLANGE,
17	84036646	6	SCREW, M5x20
18	84021856	1	HOUSING,
19	43127	2	BOLT, {PP:80043127} Hex, M8 x 25, 8.8, M8x25
20	9835349	1	CAP, INTRODUCTION, {PP:89835349}
21	9832308	1	PLUG, {PP:89832308}
22	120064	8	SCREW, {PP:80120064} Hex, M8 x 90, 8.8, M8x90
23	322358	8	WASHER, LOCK, {PP:80322358} Belleville, M8, 8MM
24	43127	2	BOLT, {PP:80043127} Hex, M8 x 25, 8.8, Cap, HH, CL 8.8, M8 x 1.25 x 25

www.KORMO.BY

05.13(01) MECHANICAL 4-WHEEL DRIVE, POWER TAKE-OFF

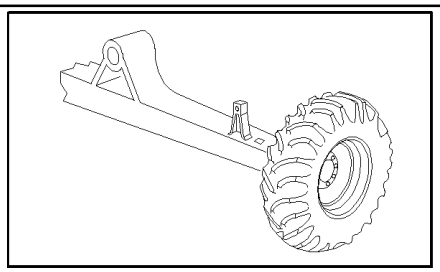

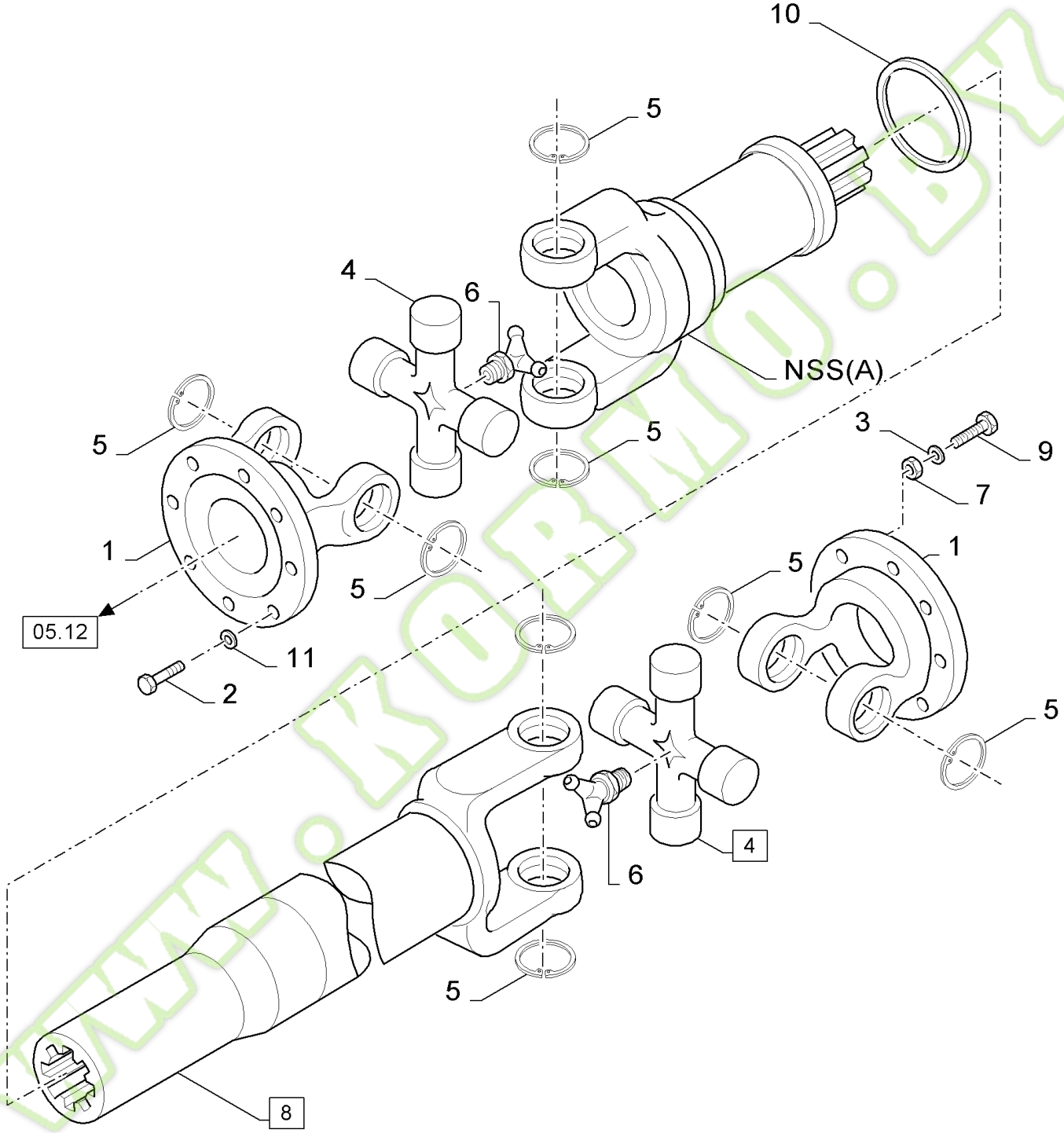

www.KOBMO.BY

FX50 SELF-PROPELLED FORAGE HARVESTER (10/02-)

05.13(01) MECHANICAL 4-WHEEL DRIVE, POWER TAKE-OFF

Ref	Part Number	Qty	Description
	84004978	1	SHAFT, PTO, (1,4 to 6,8,10), BSN C322
	84814578	1	SHAFT, PTO, , NO SUB-PARTS AVAILABLE, ASN D323
1	84021857	2	FLANGE,
2	43139	8	SCREW, {PP:80043139} Hex, M10 x 25, 8.8, Full Thd, M10x25
3	140045	16	WASHER, LOCK, {PP:80140045} Belleville, M10, 10MM
4	84021858	2	SPIDER, (5,6)
5	84031951	8	CIRCLIP,
6	84039155	2	NIPPLE, LUBE,
7	100016	8	NUT, {PP:80100016} M10, Cl 8, M10
8	84031952	1	SHAFT, (A)
9	43140	8	BOLT, {PP:80043140} Hex, M10 x 30, 8.8, M10x30, BSN C322
9	300422	8	PIN, ROLL, {PP:80300422} , ASN D323
10	84045266	1	ELEMENT, SEALING,
11	140045	8	WASHER, LOCK, {PP:80140045} Belleville, M10, , BSN C322
11	140028	8	WASHER, {PP:80140028} M10, 10MM, ASN D323

www.KOBMO.BY

05.14(01) ADJUSTABLE STEERING AXLE, SPINDLE, NA

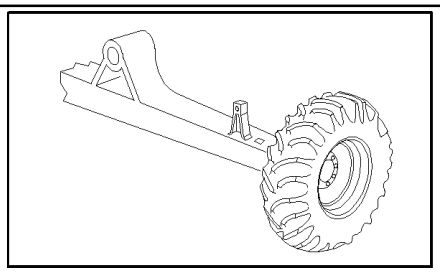

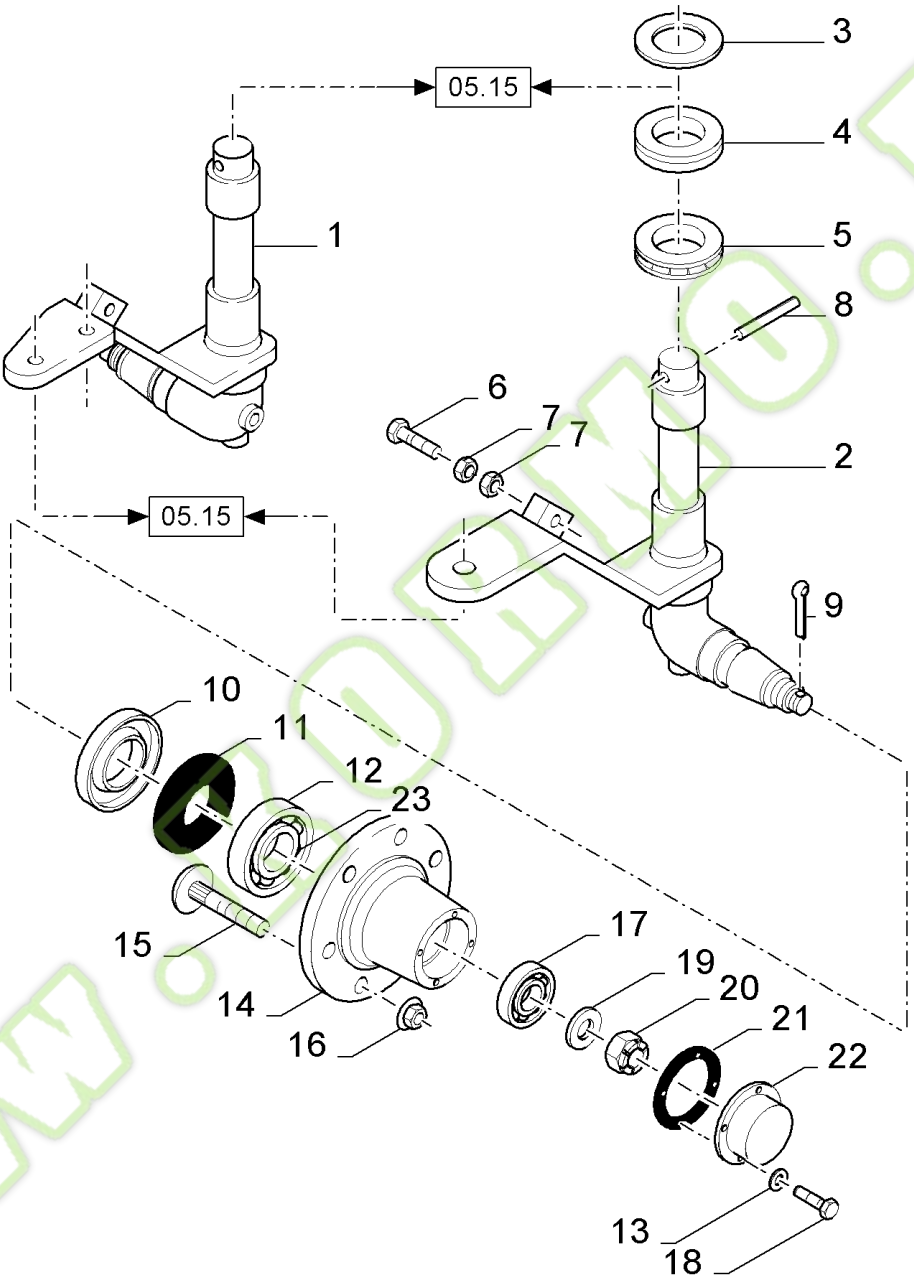

www.ROMO.BY

FX50 SELF-PROPELLED FORAGE HARVESTER (10/02-)

05.14(01) ADJUSTABLE STEERING AXLE, SPINDLE, NA

Ref	Part Number	Qty	Description
1	84444421	1	SPINDLE, RH
2	84444423	1	SPINDLE, LH
3	443076	2	WASHER, LOCK, {PP:80443076}
4	357732	2	BEARING, ROLLER CAGE, {PP:80357732}
5	301202	2	BEARING ASSY, {PP:80301202}
6	309086	2	SCREW, {PP:80309086} Hex, M12 x 60, 8.8, Full Thd,
7	337475	4	NUT, {PP:80337475} M12, Cl 10, M12
8	62218	2	PIN, {PP:80062218} M10 x 75, Slotted,
9	130011	2	PIN, SPLIT (COTTER), {PP:80130011} M5 x 40,
10	357733	2	CAP, FLANGE COVER, {PP:80357733}
11	357240	2	ELEMENT, SEALING, {PP:80357240}
12	199955	2	BEARING, CUP, {PP:80199955}
13	322357	8	WASHER, LOCK, {PP:80322357} Belleville, M6, Belleville, M6
14	84444443	2	HUB,
15	9835360	12	BOLT, {PP:89835360}
16	9817961	12	NUT, {PP:89817961}
17	9817852	2	BEARING ASSY, {PP:89817852}
18	86508568	8	SCREW, Hex, M6 x 16, 8.8, M6x16
19	304060	2	WASHER, {PP:80304060}
20	309090	2	NUT, {PP:80309090} M24 x 1.5, Cl 8, M24
21	743583	2	ELEMENT, SEALING, {PP:80743583}
22	84444441	2	COVER,
23	199954	2	BEARING, CONE, {PP:80199954}

WWW.KOBMO.BY

05.15(01) ADJUSTABLE STEERING AXLE, TIE-ROD, NA

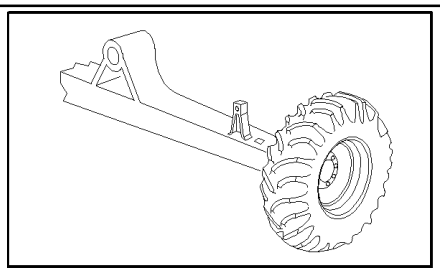

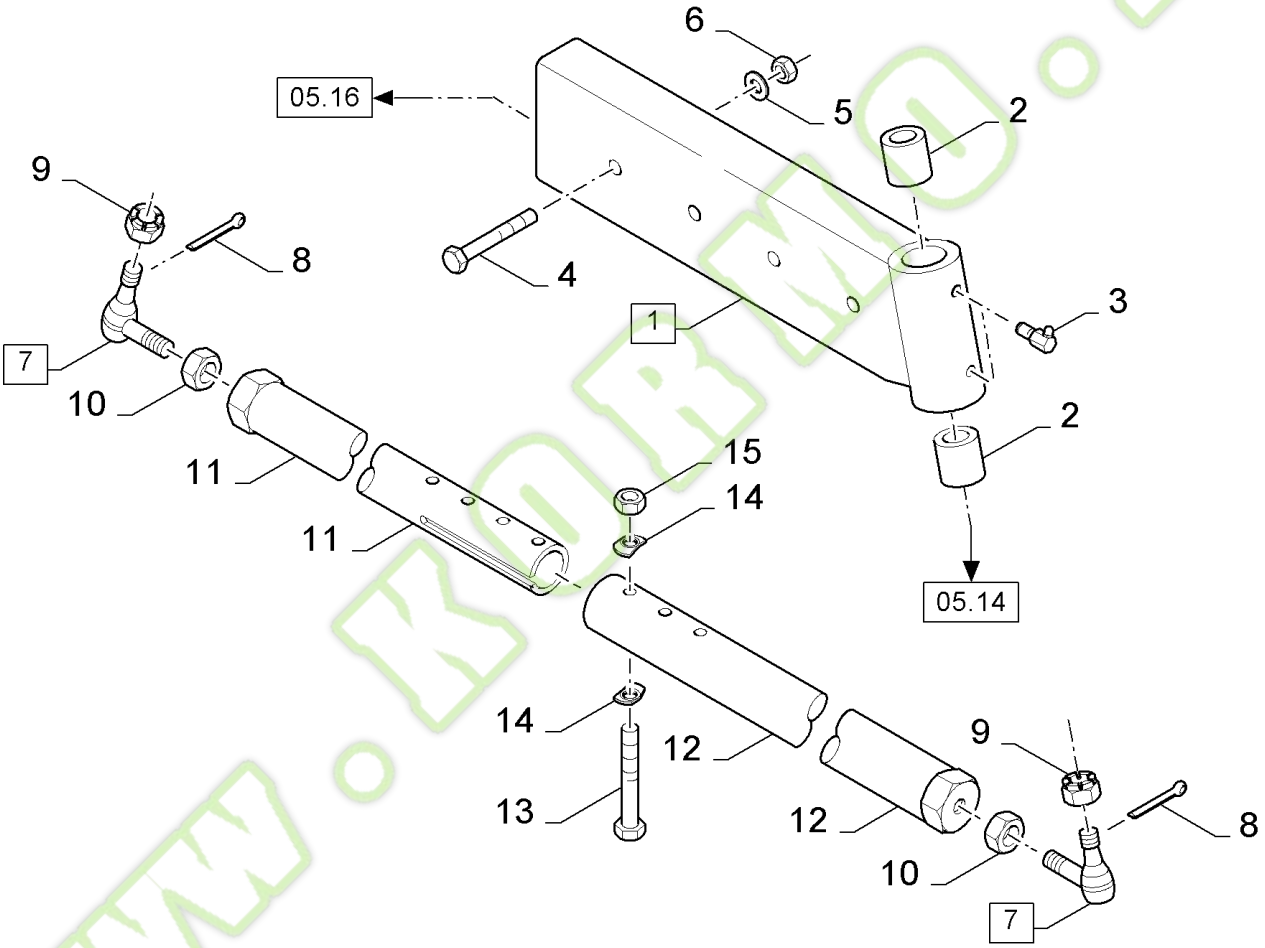

www.KOBMO.BY

FX50 SELF-PROPELLED FORAGE HARVESTER (10/02-)

05.15(01) ADJUSTABLE STEERING AXLE, TIE-ROD, NA

Ref	Part Number	Qty	Description
1	84444446	21	EXTENSION, (2)
2	84062271	4	BUSHING,
3	323713	4	NIPPLE, LUBE, {PP:80323713}
4	392531	8	BOLT, {PP:80392531} Hex, M16 x 130, 10.9, M16x130
5	84058945	8	WASHER,
6	80392530	8	NUT, M16
7	84444425	2	BALL JOINT, (8,9)
8	412685	2	PIN, SPLIT (COTTER), {PP:80412685} M4 x 32,
9	412103	2	NUT, {PP:80412103}
10	331209	3	NUT, {PP:80331209} 13/16"-16, G2, M24
11	84444435	1	ROD,
12	84444426	1	ROD,
13	120073	3	SCREW, {PP:80120073} Hex, M10 x 80, 8.8, M10x80
14	379401	6	CLAMP, {PP:80379401}
15	86514720	3	NUT, LOCK, M10

WWW.KOBMO.BY

05.16(01) ADJUSTABLE STEERING AXLE, NA

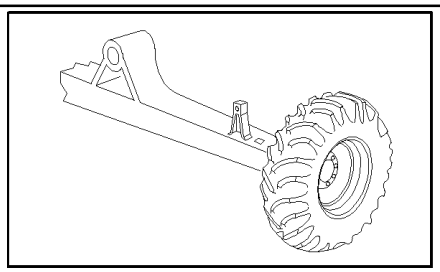

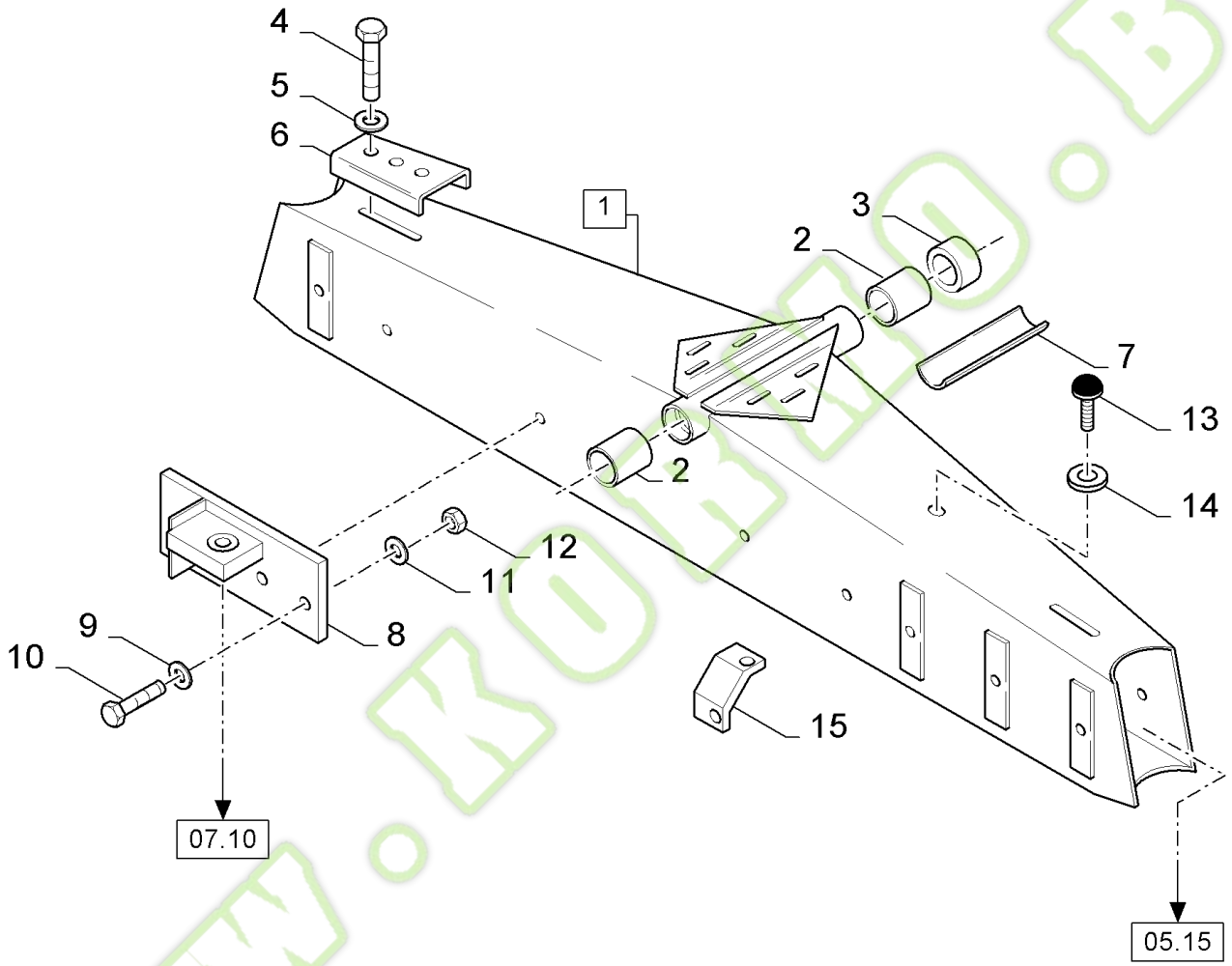

www.KOBRO.BY

FX50 SELF-PROPELLED FORAGE HARVESTER (10/02-)

05.16(01) ADJUSTABLE STEERING AXLE, NA

Ref	Part Number	Qty	Description
1	84444434	1	AXLE, REAR, (2)
2	357500	1	SLEEVE, {PP:80357500}
3	84005527	AR	WASHER,
4	86508583	2	SCREW, Hex, M16 x 35, 8.8, Hex, M16 x 35, 8.8
5	140091	2	WASHER, {PP:80140091}
6	84444438	1	PLATE,
7	84032751	1	PLATE,
8	84444428	1	SUPPORT, LH
8	84444430	1	SUPPORT, RH
9	84058945	2	WASHER, M16
10	374835	4	SCREW, {PP:80374835} Hex, M16 x 40, 10.9, Hex, M16 x 40, 10.9
11	140048	2	WASHER, LOCK, {PP:80140048} Belleville, M16,
12	80392530	4	NUT, M16
13	190029	2	INSULATOR BLOCK, {PP:80190029}
14	443076	2	WASHER, LOCK, {PP:80443076}
15	84444436	4	PLATE, COVER,

WWW.KOBMO.BY

ELECTRICAL SYSTEM	**SYSTÈME ELECTRIQUE**	**SISTEMA ELÉCTRICO**	**ELECTRISK SYSTEM**
SISTEMA DI ELETTRICO	**ELEKTRISCHES SYSTEME**	**SISTEMA ELÉCTRICA**	**ELEKTRISCH SYSTEEM**

SEC. 6

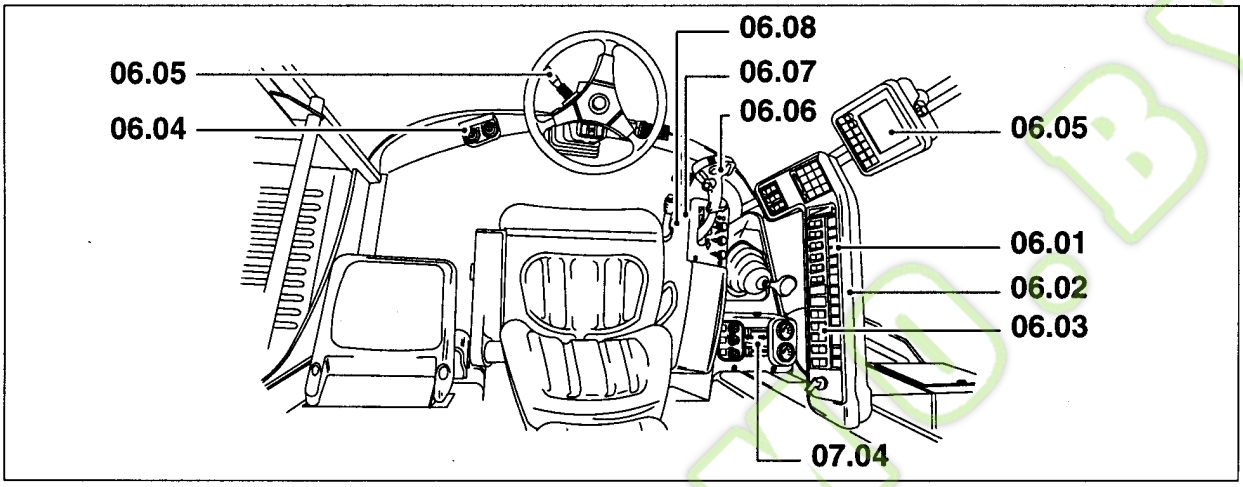

06.09 - 06.10 - 06.11 - 06.12 - 07.13
06.14 - 06.15 - 06.16 - 06.17 - 06.18
06.20 - 06.21 - 06.22

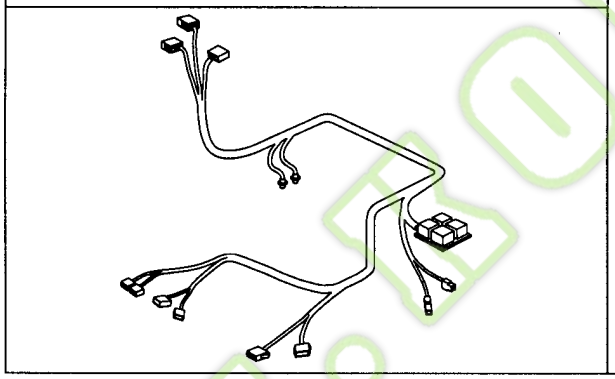

06.27 - 06.28 - 06.29
06.30 - 06.31 - 06.32

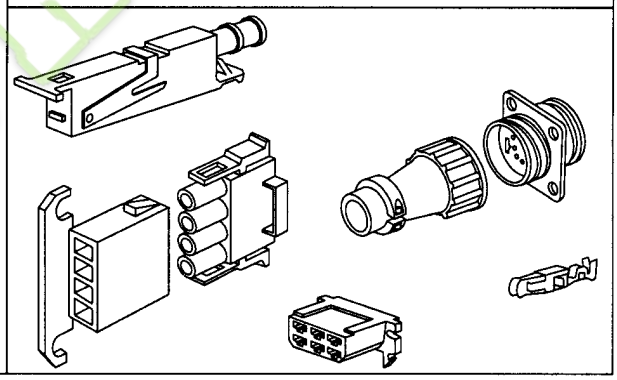

06.23

06.25
06.26

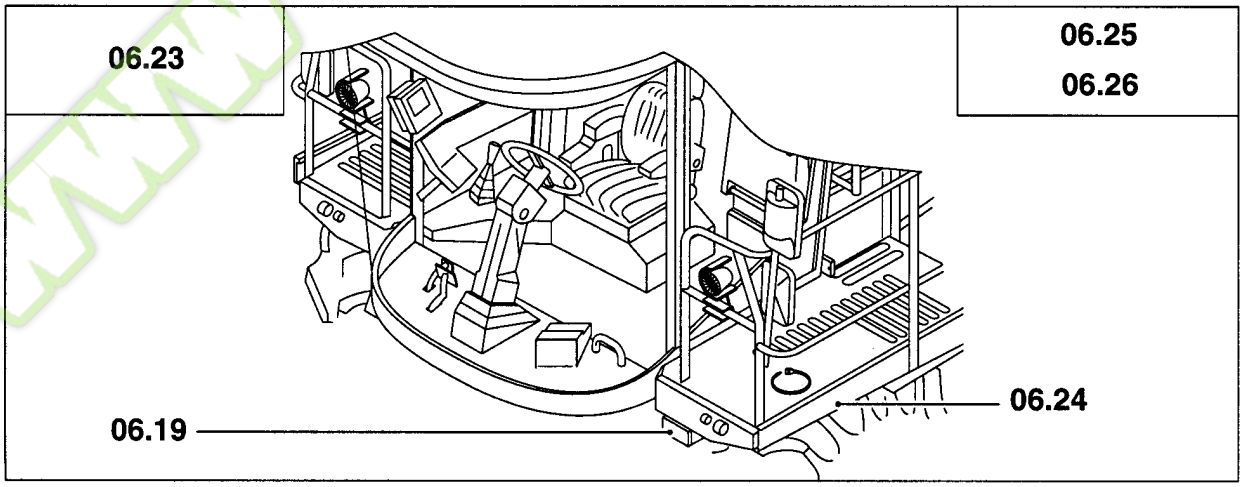

www.BOBCOB.BY

06.000(01) SECTION LIST 6

Ref	Part Number	Qty	Description

WWW.KORMO.BY

06.01(01) INSTRUMENT PANEL AND WIRING LOOM

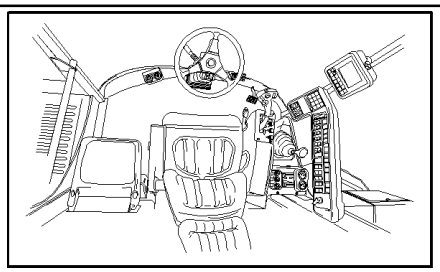

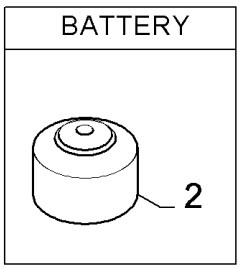

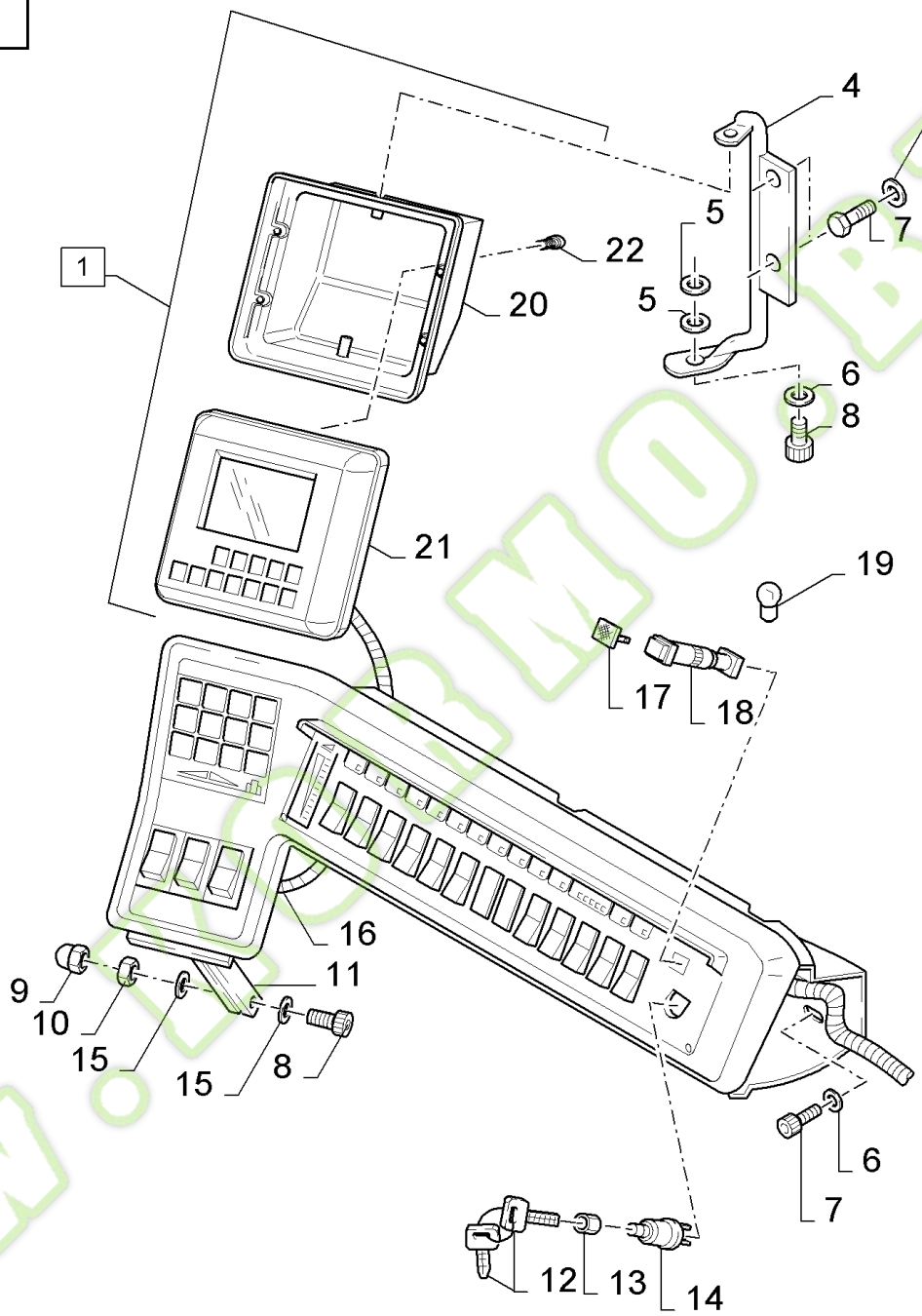

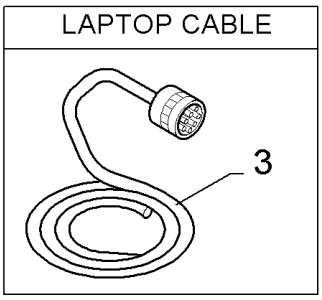

www.KOBMOBY

FX50 SELF-PROPELLED FORAGE HARVESTER (10/02-)

06.01(01) INSTRUMENT PANEL AND WIRING LOOM

Ref	Part Number	Qty	Description
1	84055643	1	MONITOR, CONTROL, (2, 20 to 22)
2	84056021	1	BATTERY, DRY,
3	84023802	1	CABLE, Electric
4	9832284	1	SUPPORT, {PP:89832284}
5	9819099	4	WASHER, {PP:89819099}
6	448889	AR	WASHER, {PP:80448889}
7	412491	AR	SCREW, {PP:80412491} M6x16
8	84007540	4	SCREW, M6x25
9	747881	2	NUT, {PP:80747881}
10	9706755	2	NUT, {PP:89706755} M6, Cl 8, M6
11	9812186	1	SUPPORT, {PP:89812186}
12	E9NN11603AB	2	KEY, IGNITION, {PP:81877351}
13	D4NN11N496A	1	NUT, {PP:83903198}
14	E8NN11N572AB	1	SWITCH, IGNITION, {PP:81876627}
15	84007539	2	WASHER, 6MM
16	84032301	1	CABLE,
17	84037377	1	LENS, , FOR CENTRAL LUBRICATION ONLY
18	84039175	1	SWITCH, (19), FOR CENTRAL LUBRICATION ONLY
19	84037356	1	BULB, , FOR CENTRAL LUBRICATION ONLY
20	84001149	1	COVER, LOWER
21	84001148	1	COVER, UPPER
22	412475	4	SCREW, {PP:80412475}

www.KOBMO.BY

06.02(01) INSTRUMENT PANEL AND WIRING LOOM

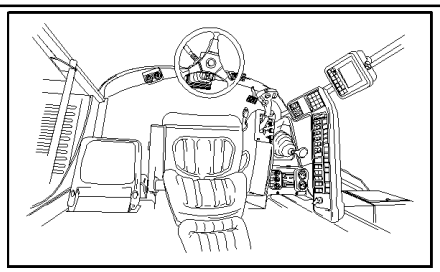

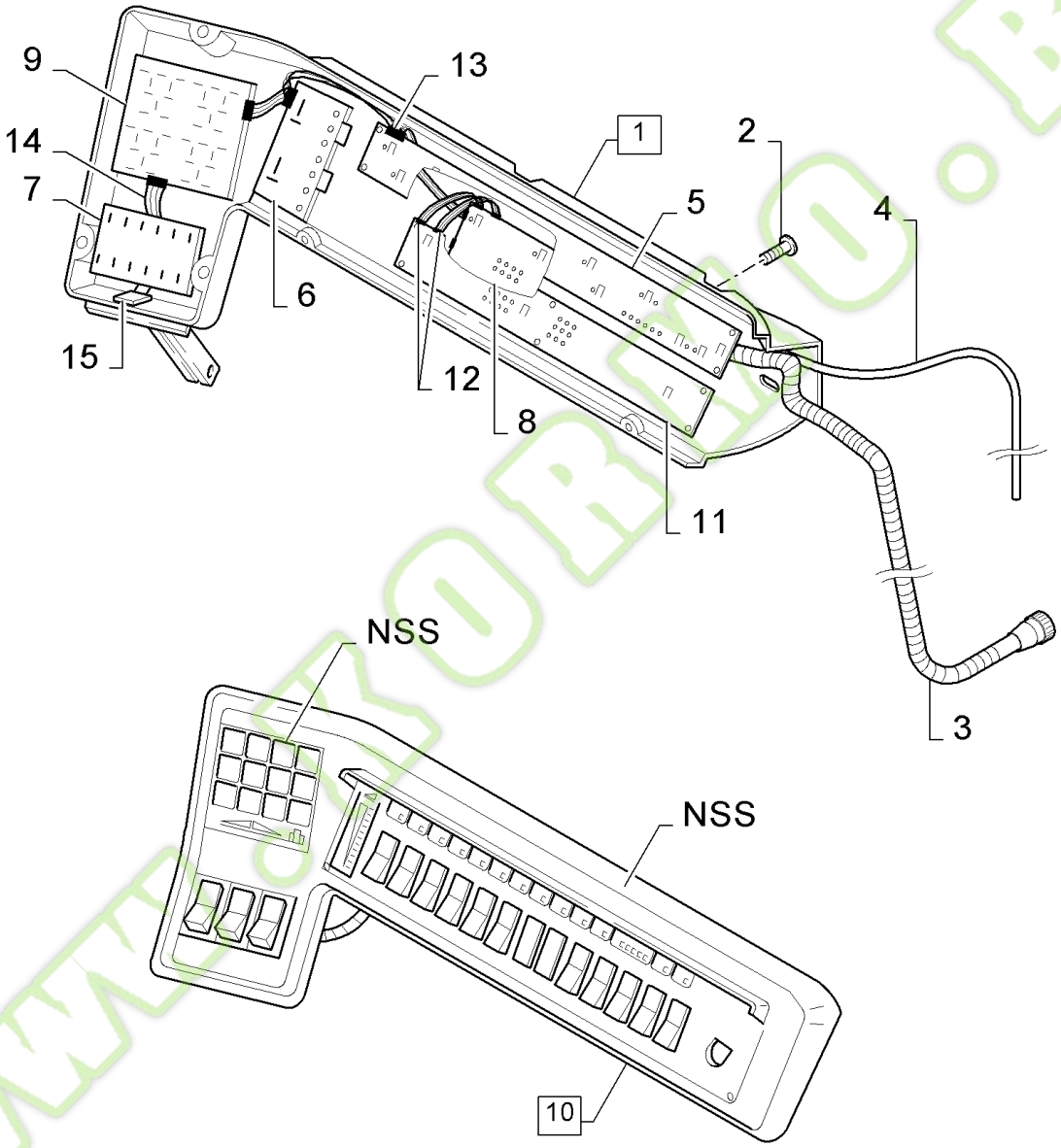

FOR COMPLETE INSTRUMENT PANEL: ORDER FRONT INSTRUMENT PANEL, BACK COVERING AND CABLE HARNESS

FX50 SELF-PROPELLED FORAGE HARVESTER (10/02-)

06.02(01) INSTRUMENT PANEL AND WIRING LOOM

Ref	Part Number	Qty	Description
1	84001897	1	COVER, Rear [7.1(16),15]
2	412475	9	SCREW, {PP:80412475} M4x16
3	84442544	1	HARNESS, WIRE,
4	9850332	1	CABLE, {PP:89850332} L=6M
4	84053876	1	CABLE, L=8M
5	84036151	1	BOARD, PRINTED CIRCUIT, Leds
6	84036152	1	BOARD, PRINTED CIRCUIT, Header
7	84019560	1	BOARD, PRINTED CIRCUIT, 3 Switches
8	84036154	1	BOARD, PRINTED CIRCUIT, Cpu
9	84036153	1	BOARD, PRINTED CIRCUIT, Aom
10	84037142	1	PANEL, INSTRUMENTS, Front, INCL. REFS. 5 TO 9,11 TO 14 AND FIGS. 7.3
11	84036150	1	BOARD, PRINTED CIRCUIT, Switches
12	84037738	1	CABLE, ELECTRIC,
13	84037739	1	CABLE, ELECTRIC,
14	84037737	1	CABLE, ELECTRIC,
15	84037745	1	CABLE, ELECTRIC, RS232

FOR COMPLETE INSTRUMENT PANEL: ORDER FRONT INSTRUMENT PANEL, BACK COVERING AND CABLE HARNESS

www.KOBMO.BY

06.03(01) INSTRUMENT PANEL AND WIRING LOOM

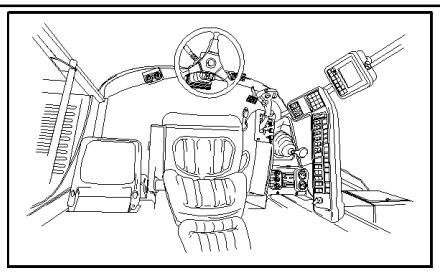

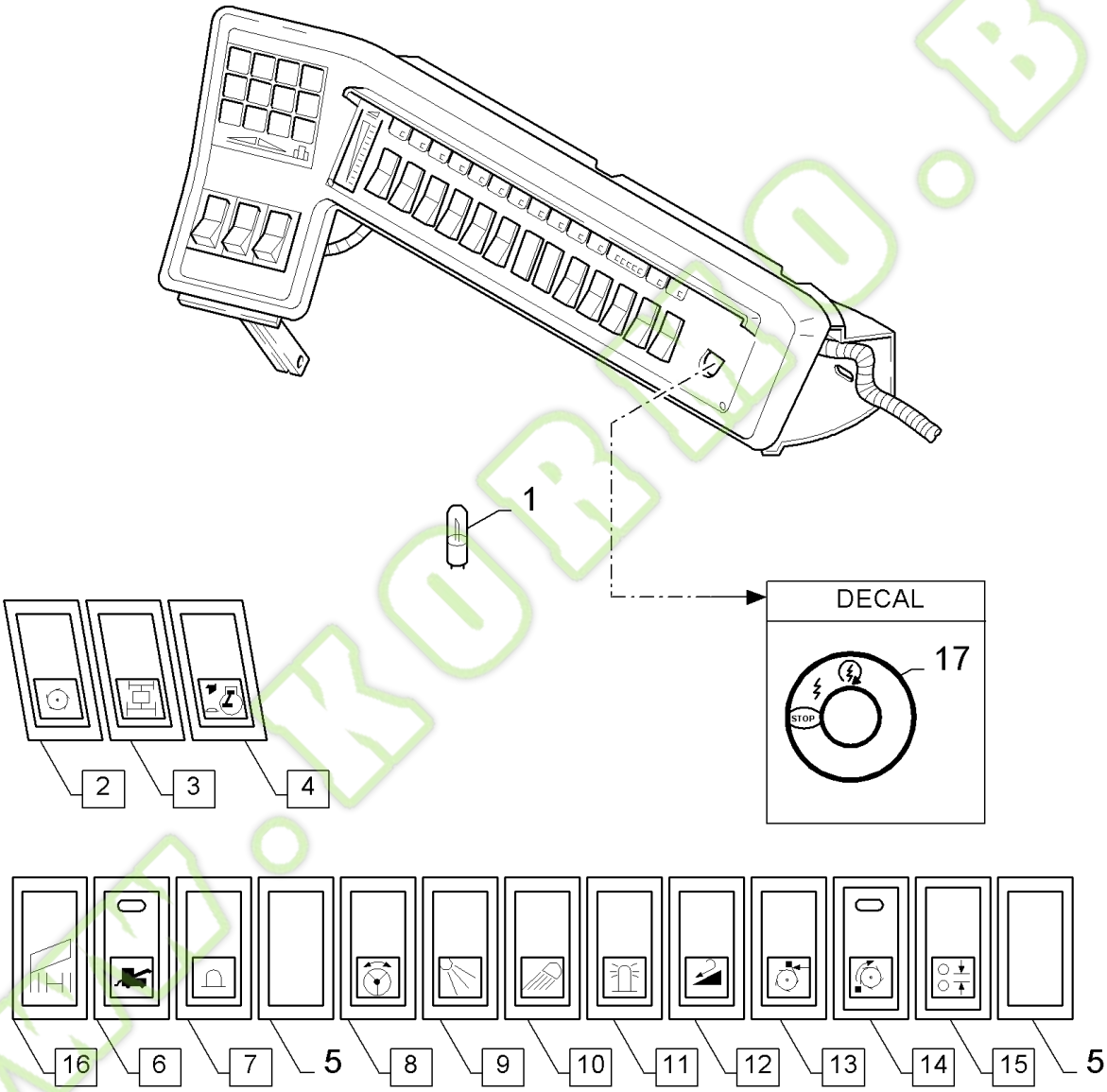

WWW.KOBELO.BY

FX50 SELF-PROPELLED FORAGE HARVESTER (10/02-)

06.03(01) INSTRUMENT PANEL AND WIRING LOOM

Ref	Part Number	Qty	Description
1	84017423	AR	BULB, 1.2W-12V
2	84019743	1	SWITCH, ASSY, (1)Drive cutterhead
3	84019742	1	SWITCH, ASSY, (1)4-Wheel drive
4	84019741	1	SWITCH, ASSY, (1)RPM
5	9504368	AR	PLUG, {PP:89504368}
6	84021351	1	SWITCH, HARVEST ROAD, (1)Harvest Road
7	84019739	1	SWITCH, ASSY, (1)Metal detector
8	84019738	1	SWITCH, ASSY, (1)Auto-pilot
9	84019737	1	SWITCH, ASSY, (1)Silage
10	84019736	1	SWITCH, LIGHTS, (1)Lights
11	84019735	1	SWITCH, ASSY, (1)Flashlight
12	84021613	1	SWITCH, ASSY, (1)Reverse mech.
13	84019734	1	SWITCH, ASSY, (1)Adjust-o-matic
14	84019733	1	SWITCH, ASSY, (1)Reverse cutterhead
15	84019732	1	SWITCH, ASSY, (1)Roll adj.
16	84043203	1	SWITCH, ASSY, (1)High capacity hydr.
17	84002722	1	DECAL, , FOR NA ONLY

www.KOBMO.BY

06.04(01) INSTRUMENT PANEL

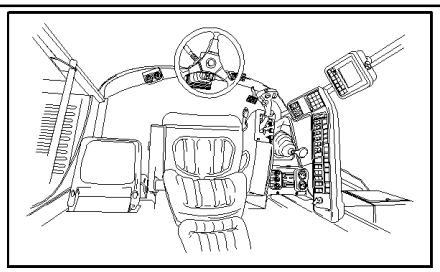

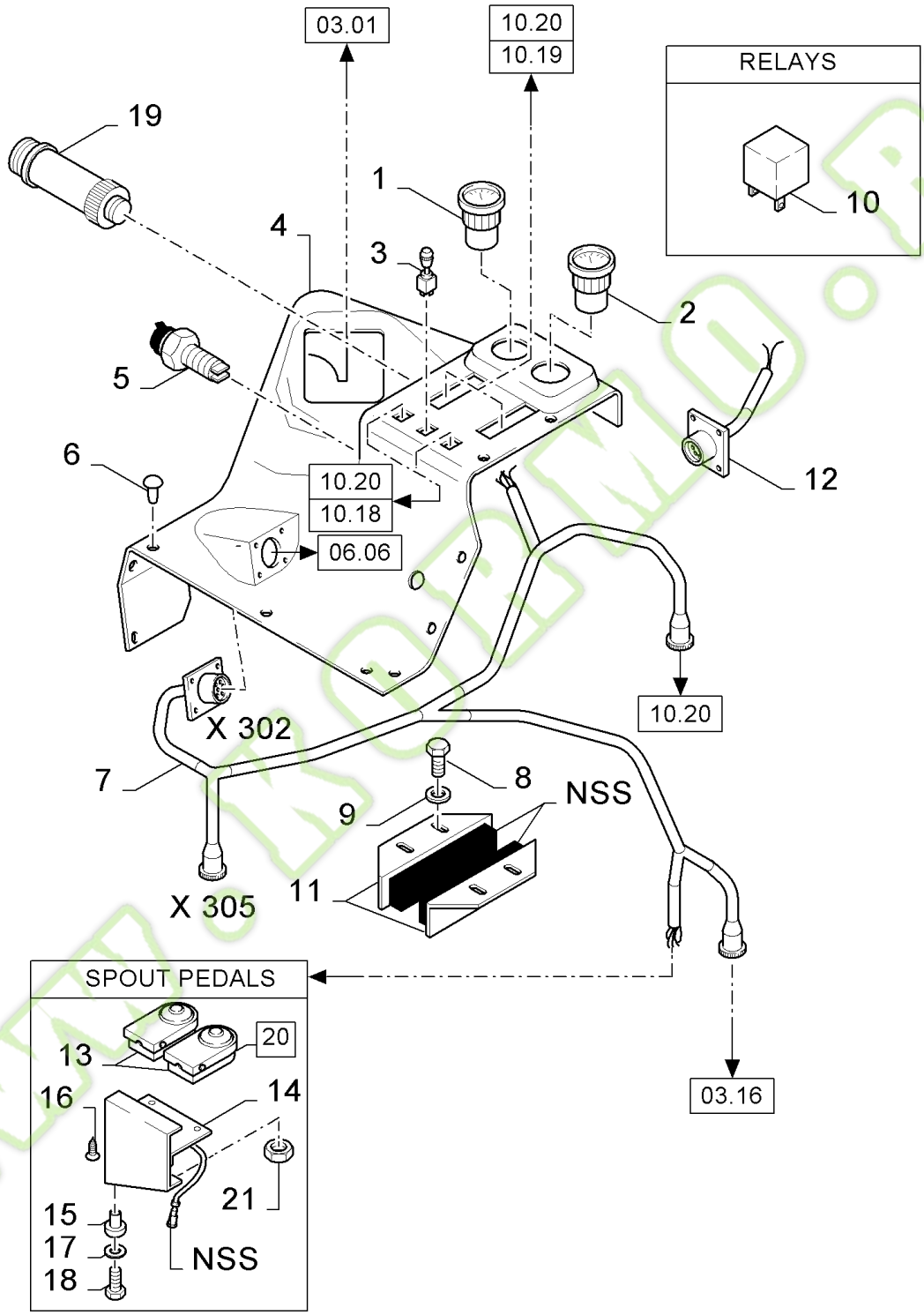

www.tomo.by

FX50 SELF-PROPELLED FORAGE HARVESTER (10/02-)

06.04(01) INSTRUMENT PANEL

Ref	Part Number	Qty	Description
1	9837115	1	GAUGE, LEVEL, {PP:89837115} Water
2	9837116	1	GAUGE, LEVEL, {PP:89837116} Fuel level
3	9850817	1	SWITCH, FAN, {PP:89850817} Cab fan
4	9818587	1	CASE, {PP:89818587} Gearshift
5	374418	1	SOCKET, POWER, {PP:80374418}
6	446914	AR	PLUG, {PP:80446914}
7	84002995	1	HARNESS, WIRE,
8	80120099	4	SCREW, Hex, M6 x 16, 8.8, M6x16
9	140015	4	WASHER, {PP:80140015} 6MM
10	84000651	2	RELAY, FAN
11	84000548	2	SUPPORT,
12	450071	1	SENDER UNIT, {PP:80450071}
13	9833626	2	PEDAL, {PP:89833626}
14	84001175	1	SUPPORT,
15	322357	2	WASHER, LOCK, {PP:80322357} Belleville, M6, Belleville, M6
16	9850737	4	SCREW, {PP:89850737}
17	140040	3	WASHER, {PP:80140040} M6 x 22 x 2, 6MM
18	120100	3	BOLT, {PP:80120100} Hex, M6 x 20, 8.8, M6x20
19	84038796	1	LIGHTER, CIGARETTE, , FOR NA ONLY
20	84814772	1	PEDAL, (13)
21	353068	3	NUT, {PP:80353068}

www.KOBMO.BY

06.05(01) WIRING LOOM, STEERING COLUMN

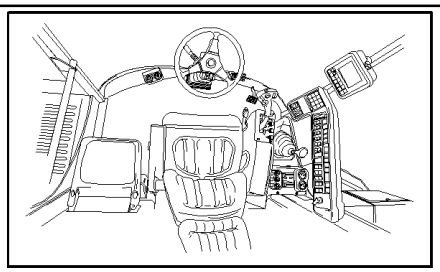

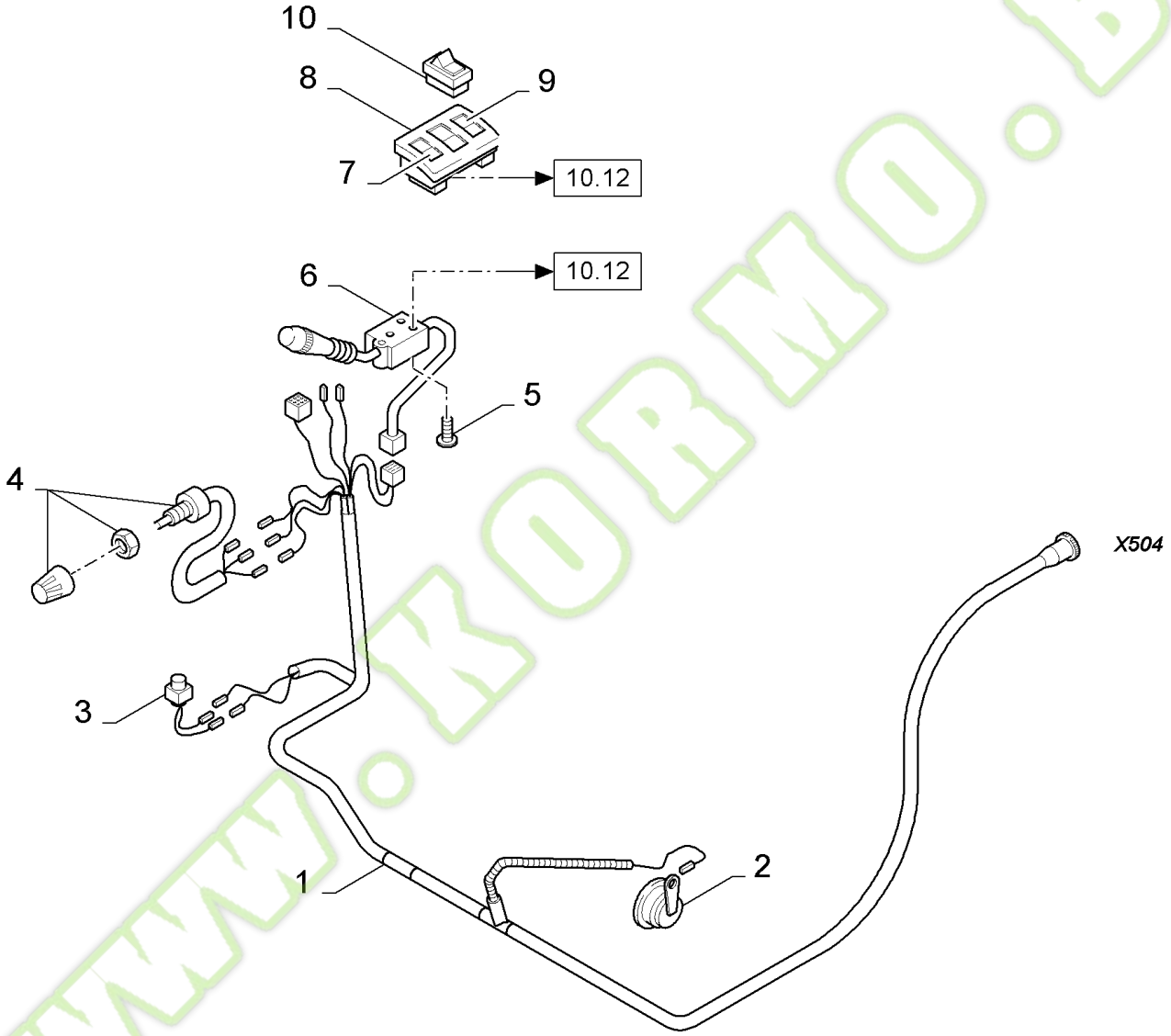

www.KOBMO.BY

FX50 SELF-PROPELLED FORAGE HARVESTER (10/02-)

06.05(01) WIRING LOOM, STEERING COLUMN

Ref	Part Number	Qty	Description
1	84442727	1	HARNESS, WIRE,
1	84057126	1	HARNESS, WIRE, HARNESS, WIRE, FOR NA ONLY
2	80354374	1	HORN,
3	89617222	1	SWITCH,
4	89617220	1	POTENTIOMETER,
5	280154	3	SCREW, SELF TAPPING, {PP:80280154} Cross Rd Hd, #6 x 1/2", M6x.50"
6	84014920	1	SWITCH, ASSY,
7	9817520	1	LAMP, {PP:89817520}
8	84014917	1	PLATE, COVER,
9	84021299	1	LAMP,
10	89817432	1	SWITCH, FLASHER,
10	84014314	1	SWITCH, ASSY, , FOR NA ONLY

www.KOBMO.BY

06.06(01) CONTROL LEVER FOR HYDRAULICS

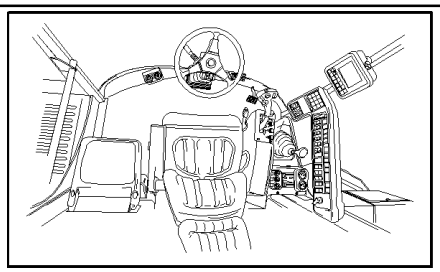

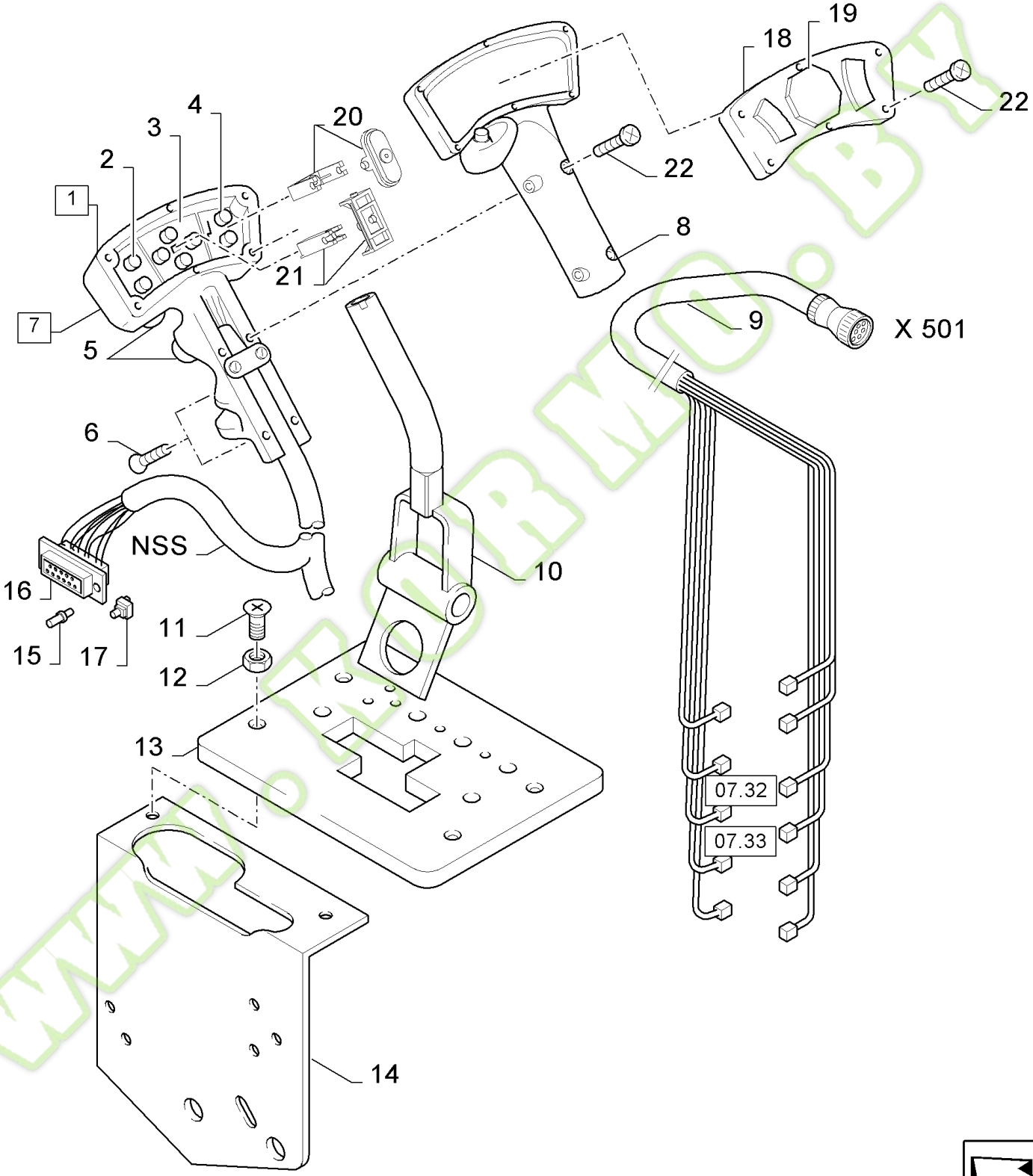

FX50 SELF-PROPELLED FORAGE HARVESTER (10/02-)

06.06(01) CONTROL LEVER FOR HYDRAULICS

Ref	Part Number	Qty	Description
1	84004941	1	HANDLE, CRANKED, (2 to 14,18 to 21)
2	84022672	1	BOARD, PRINTED CIRCUIT, , INCLUDING SWITCHES
3	84022673	1	BOARD, PRINTED CIRCUIT, , INCLUDING SWITCHES
4	84022675	1	BOARD, PRINTED CIRCUIT, , INCLUDING SWITCHES
5	84022674	2	SWITCH, ASSY,
6	89819756	2	SCREW, M4x8
7	9833098	1	HANDLE, {PP:89833098} (2 to 10,18,19)
8	84017914	1	COVER, , INCLUDING SWITCHES
9	84441372	1	HARNESS, WIRE, , WITH REAR OUT HYDRAULICS
9	84441371	1	HARNESS, WIRE,
9	84441373	1	HARNESS, WIRE, , WITH CROP PRO PLUS ONLY
10	84017665	1	HANDLE,
11	374897	4	SCREW, {PP:80374897} Hex Flat Hd, M8 x 25, 4.8, M8x25
12	100067	2	NUT, {PP:80100067} M8 x 1.25", Cl 8, M8
13	84017666	1	COVER,
14	9819972	1	SUPPORT, {PP:89819972}
15	84018300	20	CONNECTOR, HYD.,
16	84018301	1	BLOCK, CONNECTING,
17	84018302	1	KIT,
18	84032398	1	KNOB,
19	84032396	1	SET OF PARTS, , ALL DECALS ARE INCLUDED, 6 PIECES
20	84058336	1	LEVELLING DEVICE,
21	84058337	1	LEVELLING DEVICE,
22	84100667	AR	SCREW,

www.KOBMO.BY

06.07(01) ELECTRONIC CONTROL UNIT FOR HYDRAULICS

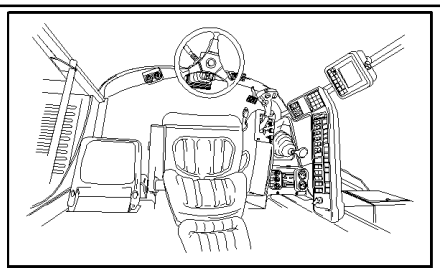

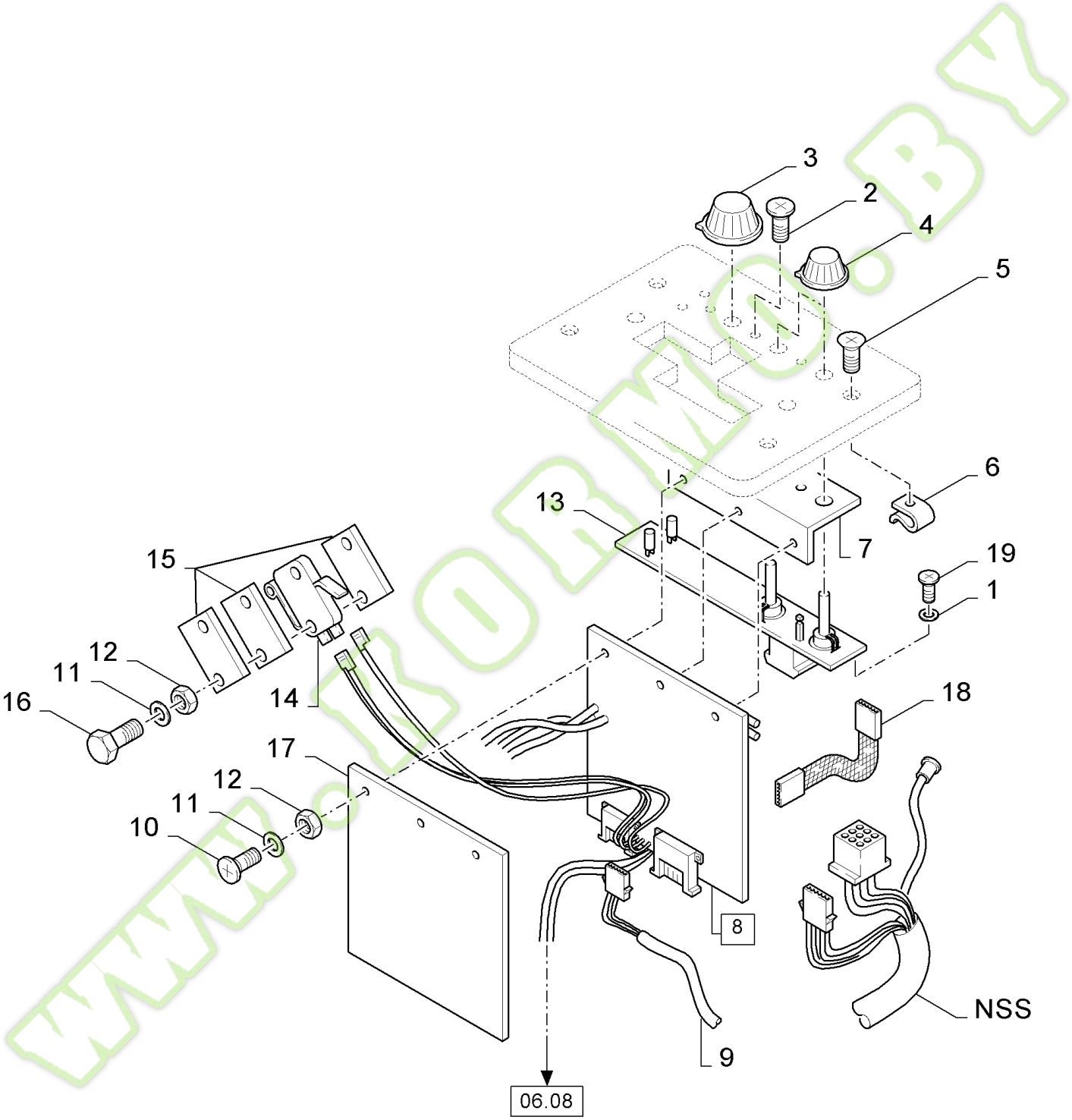

www.KOBMOBY

FX50 SELF-PROPELLED FORAGE HARVESTER (10/02-)

06.07(01) ELECTRONIC CONTROL UNIT FOR HYDRAULICS

Ref	Part Number	Qty	Description
1	84031878	AR	WASHER,
2	321803	3	BOLT, {PP:80321803} Cross Pan Hd, M4 x 10, M4x10
3	9819757	1	KNOB, {PP:89819757}
4	9819758	2	KNOB, {PP:89819758}
5	9819754	4	SCREW, {PP:89819754}
6	9819712	4	CLIP, {PP:89819712}
7	9819911	1	SUPPORT, {PP:89819911}
8	84045779	1	BOARD, PRINTED CIRCUIT, [7.8(19)], WITH POTENTIOMETER
9	84001764	1	HARNESS, WIRE,
10	80120006	3	SCREW, M3x16
11	412547	5	WASHER, LOCK, {PP:80412547} Serr, M3, 3MM
12	100011	5	NUT, {PP:80100011} M3, Cl 8, M3
13	84018151	1	BOARD, PRINTED CIRCUIT,
14	399159	1	SWITCH, {PP:80399159}
15	9819980	3	PLATE, {PP:89819980}
16	301571	2	SCREW, {PP:80301571} M3x25
17	84019455	1	SHIELD,
18	84023617	1	HARNESS, WIRE,
19	84031877	AR	BOLT,

www.KOBMO.BY

06.08(01) ELECTRONIC CONTROL UNIT FOR HYDRAULICS

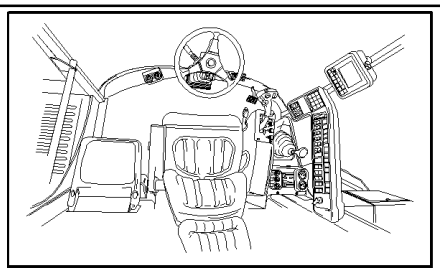

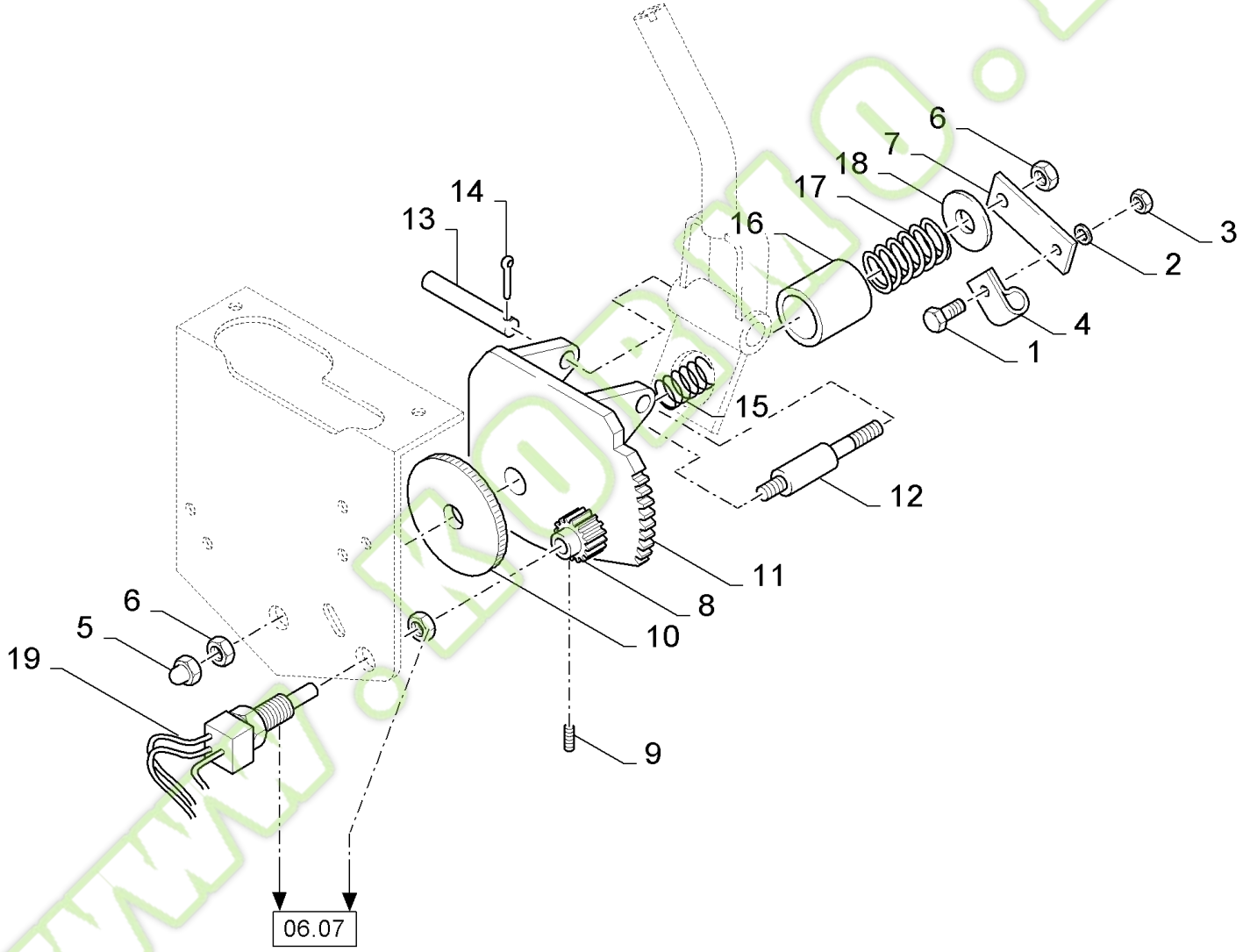

www.KOBMO.BY

FX50 SELF-PROPELLED FORAGE HARVESTER (10/02-)

06.08(01) ELECTRONIC CONTROL UNIT FOR HYDRAULICS

Ref	Part Number	Qty	Description
1	412491	1	SCREW, {PP:80412491} M6x16
2	322357	1	WASHER, LOCK, {PP:80322357} Belleville, M6, Belleville, M6
3	9706755	1	NUT, {PP:89706755} M6, Cl 8, M6
4	9507809	1	CLAMP, {PP:89507809}
5	747886	1	NUT, {PP:80747886} M10
6	100016	2	NUT, {PP:80100016} M10, Cl 8, M10
7	9832483	1	PLATE, COVER, {PP:89832483}
8	84022671	1	GEAR,
9	9819753	1	SCREW, {PP:89819753} Hex Soc, M4 x 4, Cup Pt, M4x4
10	84056641	1	DISC,
11	9819679	1	SUPPORT, {PP:89819679}
12	9819970	1	SHAFT, {PP:89819970}
13	412102	1	PIN, {PP:80412102}
14	130003	2	PIN, SPLIT (COTTER), {PP:80130003} M3.2 x 20,
15	320502	1	SPRING, {PP:80320502}
16	84007406	1	BUSHING,
17	750881	1	SPRING, {PP:80750881}
18	140219	1	WASHER, {PP:80140219} 10MM
19	84045778	1	POTENTIOMETER,

www.KOBMO.BY

06.09(01) CAB ROOF, ELECTRICITY

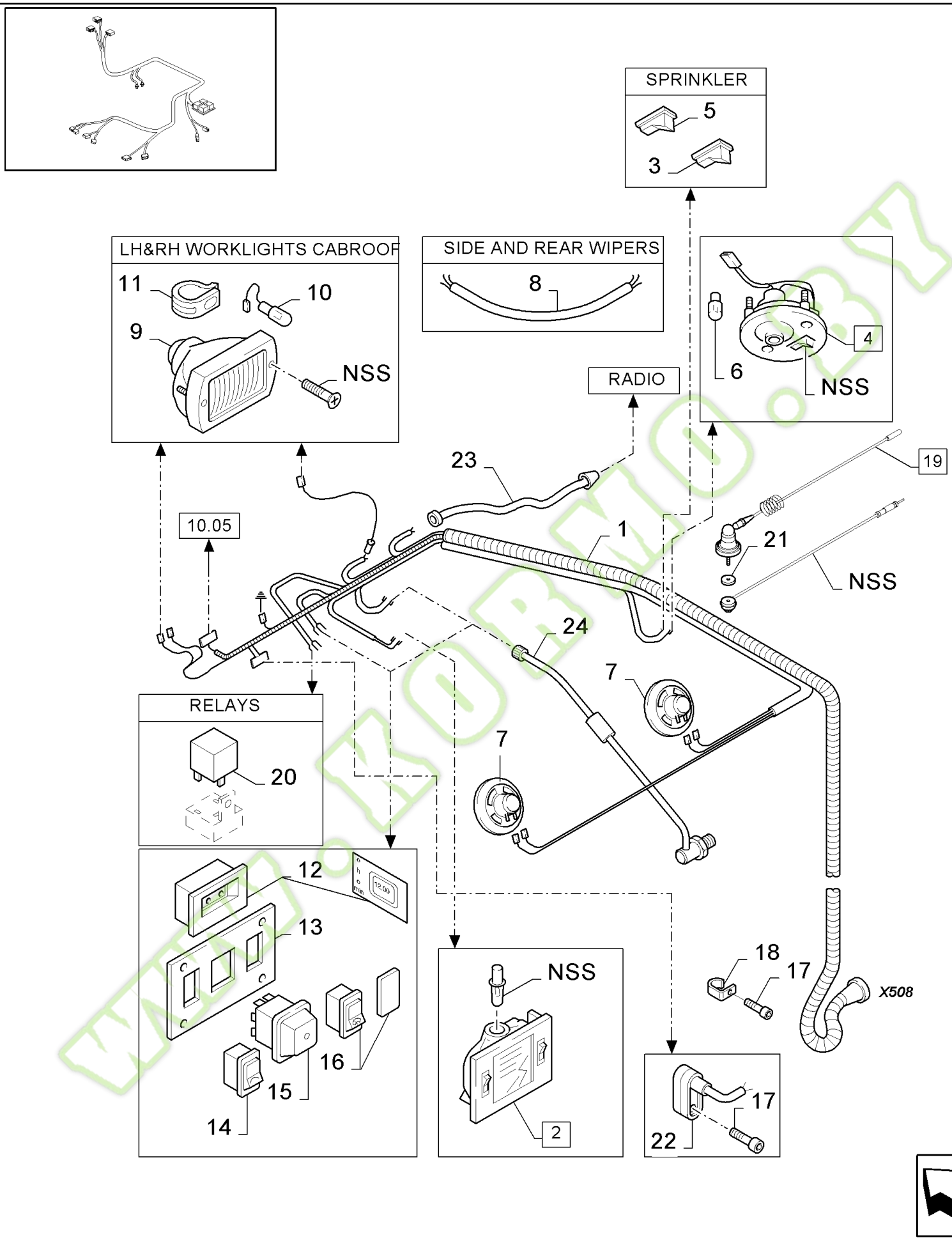

FX50 SELF-PROPELLED FORAGE HARVESTER (10/02-)

06.09(01) CAB ROOF, ELECTRICITY

Ref	Part Number	Qty	Description
1	84817687	1	HARNESS, WIRE,
2	9504225	1	LAMP, {PP:89504225}
3	84007080	1	SWITCH, WINDSHIELD WIPER, Wiper
4	9504222	1	LAMP, {PP:89504222}
5	84037501	1	SWITCH, ASSY, Sprinkler,front
5	84037502	1	SWITCH, ASSY, Sprinkler
5	84037503	1	SWITCH, ASSY, Sprinkler
6	353078	1	BULB, {PP:80353078}
7	9815968	1	SPEAKER, {PP:89815968} (Set of 2)
8	84035378	1	HARNESS, WIRE,
9	9837139	2	HEADLAMP, {PP:89837139}
10	446592	2	BULB, {PP:80446592}
11	9819712	4	CLIP, {PP:89819712}
12	84429897	1	CLOCK,
13	9812398	1	PLATE, {PP:89812398}
14	84037499	1	SWITCH, ASSY, Mirror
15	9501006	1	SWITCH, ASSY, {PP:89501006} Mirror
16	9504368	1	PLUG, {PP:89504368}
16	84037500	1	SWITCH, ASSY, Mirror, FOR GERMANY ONLY
17	9835804	AR	SCREW, {PP:89835804}
18	84005699	AR	CLIP,
19	84026763	1	ANTENNA,
20	84000651	3	RELAY, , MIRRORS + REAR WINDSHIELD HEATING
21	84002421	1	WASHER,
22	E7NN13752AA	1	SWITCH, ASSY, {PP:83961521} Door
23	84015251	1	HARNESS, WIRE,
24	84017502	1	CABLE,

www.KORMO.BY

06.10(01) ELECTRIC CONTROL BOX

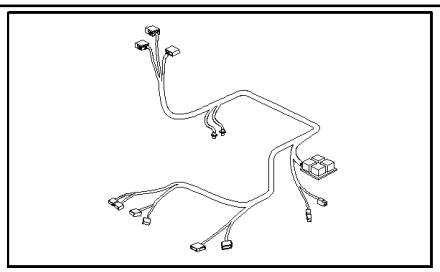

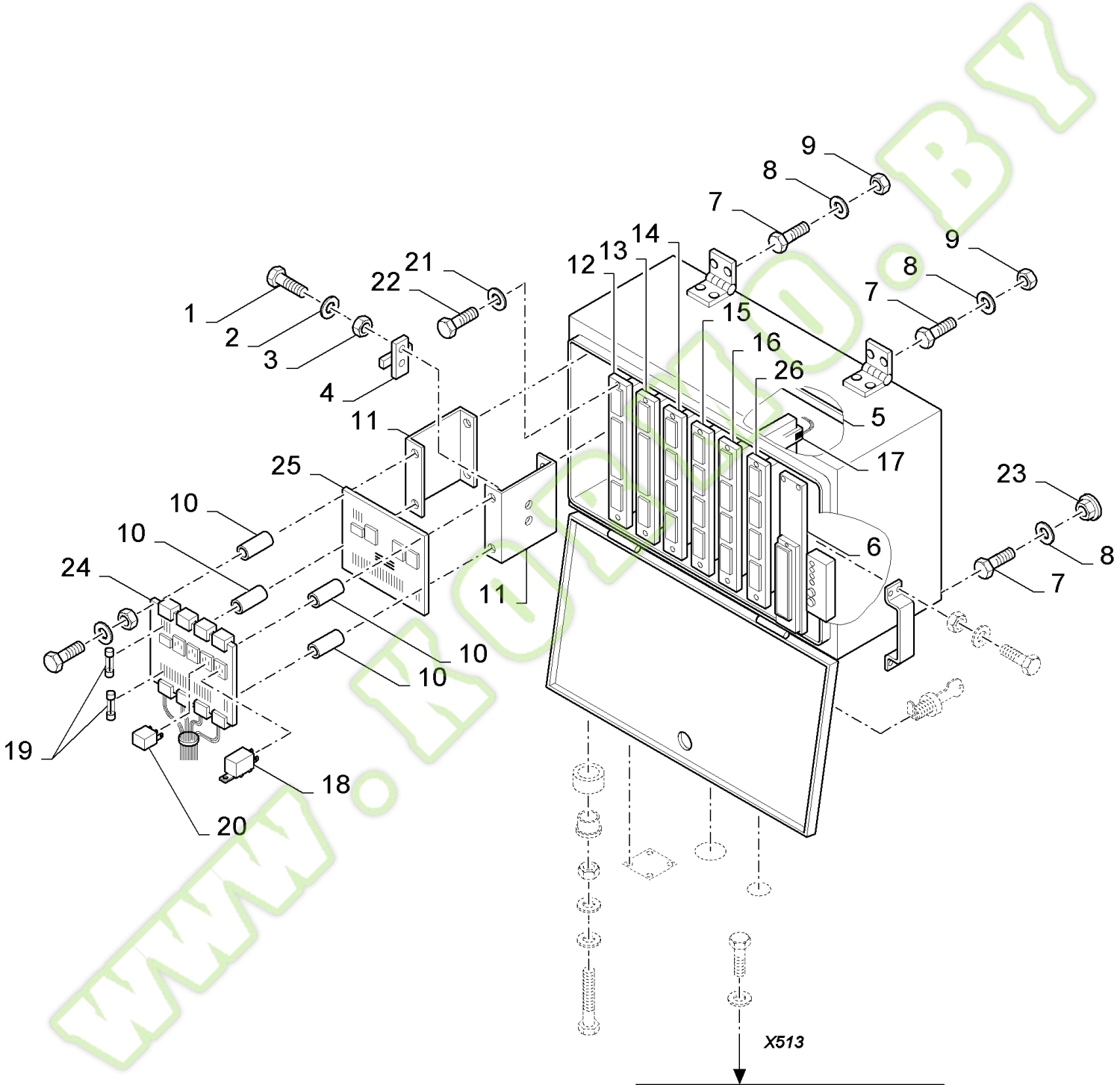

X513	07.36	HIGH CAPACITY
X500	06.20	ENGINE

www.BOMO.BY

FX50 SELF-PROPELLED FORAGE HARVESTER (10/02-)

06.10(01) ELECTRIC CONTROL BOX

Ref	Part Number	Qty	Description
1	120007	2	SCREW, {PP:80120007} Cross Pan Hd, M4 x 16, M4x16
2	322355	2	WASHER, LOCK, {PP:80322355} Belleville, M4, 4MM
3	100012	2	NUT, {PP:80100012} M4, Cl 8, M4
4	457197	AR	FUSE, {PP:80457197} 40A
5	84018167	1	PANEL, BOXED,
6	84441623	1	PLATE,
7	43128	8	SCREW, {PP:80043128} Hex, M8 x 30, 8.8, Cap, HH, CL 8.8, M8 x 1.25 x 30
8	322358	4	WASHER, LOCK, {PP:80322358} Belleville, M8, 8MM
9	89706690	8	NUT, CL 8, M8 x 1.25 x 13.0
10	9818991	AR	BUSHING, {PP:89818991}
11	84019647	1	SUPPORT,
12	84036155	1	BOARD, PRINTED CIRCUIT, CPU, BSN C305
12	84058009	1	BOARD, PRINTED CIRCUIT, , ASN D306
13	84807143	1	BOARD, PRINTED CIRCUIT, ADJ
14	84443498	1	BOARD, PRINTED CIRCUIT, Light
15	84443500	1	BOARD, PRINTED CIRCUIT, Act
16	84443502	1	BOARD, PRINTED CIRCUIT, Valve
17	84019648	1	HARNESS, WIRE,
18	441074	1	FLASHER UNIT, {PP:80441074}
18	9813500	1	FLASHER UNIT, {PP:89813500} , FOR ITALY ONLY, ORDER THIS ITEM WHEN ILLUMINATION KIT INSTALLED(SEE GROUP 06.24)
19	89811773	AR	FUSE, 10A
19	9623774	AR	FUSE, {PP:89623774} 15A
19	D9ZB14A094FA	AR	FUSE, {PP:83932926} 25A
19	84032356	AR	FUSE, 30A
19	84038658	AR	FUSE, 40A
20	84000651	AR	RELAY, , POWER (12V) ON IGNITION, SILAGE ADDITIVE APPLICATOR, PARKING LIGHTS
21	84031878	AR	WASHER,
22	84031877	AR	BOLT,
23	89804277	2	NUT,
24	84442510	1	BOARD, PRINTED CIRCUIT, Power
25	84031297	1	BOARD, PRINTED CIRCUIT, Flasher, FOR NA ONLY
26	84807144	1	BOARD, PRINTED CIRCUIT,

www.KOBMO.BY

06.11(01) ELECTRIC CONTROL BOX

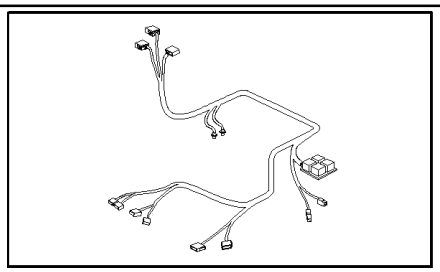

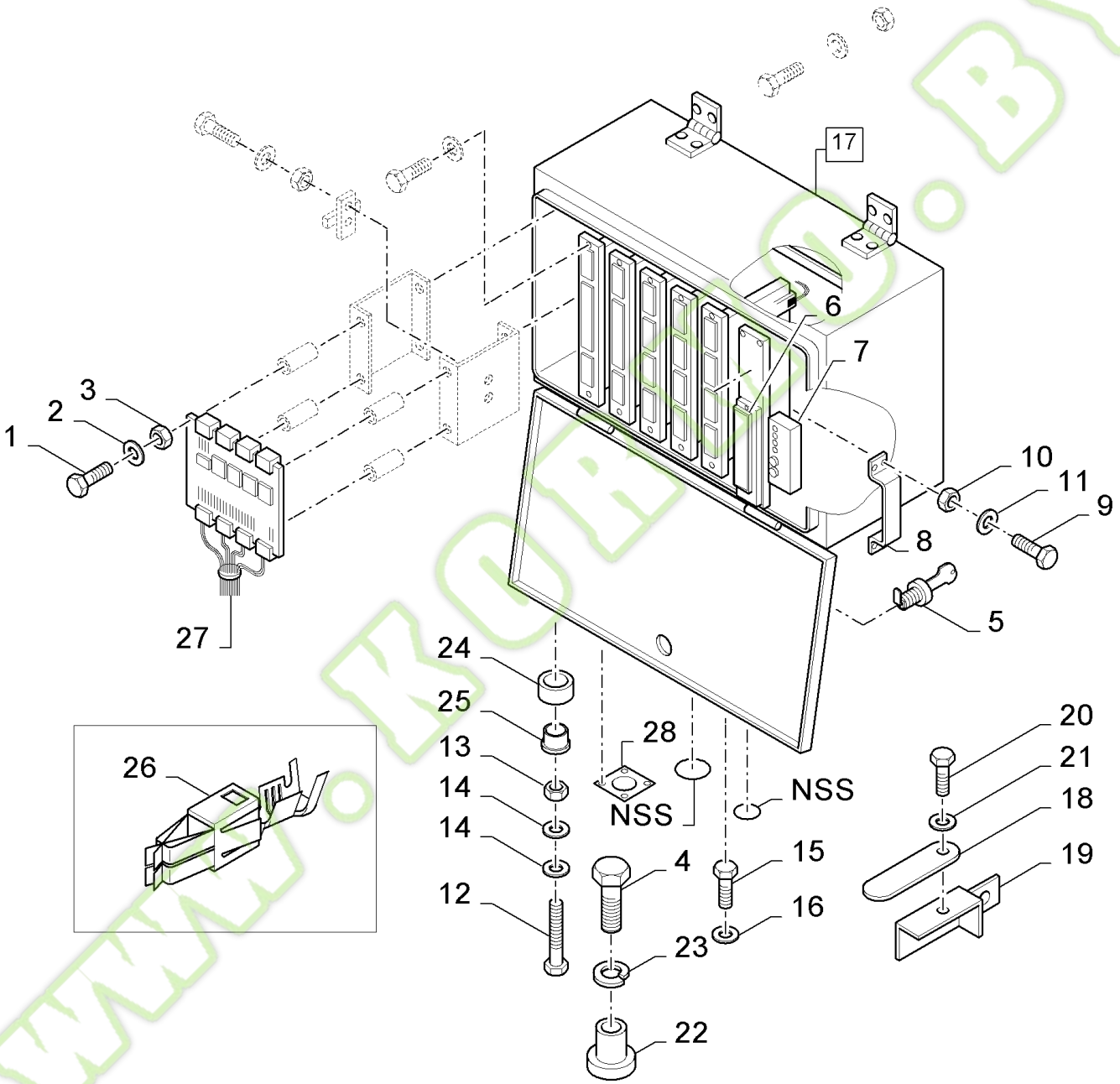

www.KOEHLER.BY

FX50 SELF-PROPELLED FORAGE HARVESTER (10/02-)

06.11(01) ELECTRIC CONTROL BOX

Ref	Part Number	Qty	Description
1	80120099	10	SCREW, Hex, M6 x 16, 8.8, M6x16
2	322357	10	WASHER, LOCK, {PP:80322357} Belleville, M6, Belleville, M6
3	9706755	10	NUT, {PP:89706755} M6, Cl 8, M6
4	388113	1	SCREW, {PP:80388113} Hex, M12 x 16, 8.8, Full Thd, M12x16
5	9814881	1	LOCK, {PP:89814881}
6	84053755	1	ELECTRONIC UNIT, CONTROL, EMRD
7	84018170	1	ELECTRONIC UNIT, CONTROL,
8	84019665	1	SUPPORT,
9	80385683	4	SCREW, M4x10
10	100012	6	NUT, {PP:80100012} M4, Cl 8, M4
11	322355	6	WASHER, LOCK, {PP:80322355} Belleville, M4, 4MM
12	120060	2	SCREW, {PP:80120060} Hex, M8 x 50, 8.8, M8x50
13	89706690	2	NUT, CL 8, M8 x 1.25 x 13.0
14	322358	2	WASHER, LOCK, {PP:80322358} Belleville, M8, 8MM
15	9837223	1	CONNECTOR, HYD., {PP:89837223}
16	9839398	1	NUT, {PP:89839398}
17	NS	1	NOT SERVICED, , BOX, FOR FX60 ONLY
17	NS	1	NOT SERVICED, (12 to 14,26,27), BOX, FOR NA ONLY, FOR FX60 ONLY
17	NS	1	NOT SERVICED, (12 to 14,26,27), BOX, FOR FX30-40-50 ONLY
17	NS	1	NOT SERVICED, , BOX, FOR FX30-40 ONLY, FOR NA ONLY
18	84052103	1	BRACKET,
19	84052117	1	BRACKET,
20	80120099	1	SCREW, Hex, M6 x 16, 8.8, M6x16
21	353308	1	NUT, {PP:80353308} M6 x 1, Cl 8, M6
22	84053017	1	HANDLE,
23	140046	1	WASHER, LOCK, {PP:80140046} Belleville, M12, 12MM
24	9815122	AR	BUSHING, {PP:89815122}
25	9815121	AR	BUSHING, {PP:89815121}
26	84400960	1	DIODE,
27	84441375	1	HARNESS, WIRE, , NOT FOR NA, BSN C305
27	84449999	1	HARNESS, WIRE, , NOT FOR NA, ASN D306
27	84441374	1	HARNESS, WIRE, , FOR NA ONLY, BSN C305
27	84452000	1	HARNESS, WIRE, , FOR NA ONLY, ASN D306
28	84004450	1	COVER, X511
28	84004383	13	ELEMENT, SEALING,
28	84004382	1	SEAL, X509
28	89818021	1	COVER, X513, NOT FOR NA

WWW.KUBHO.BY

06.12(01) ELECTRIC WIRING, SPOUT AND FLASHERS

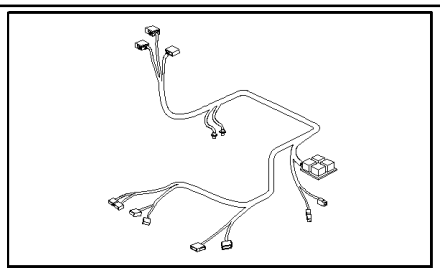

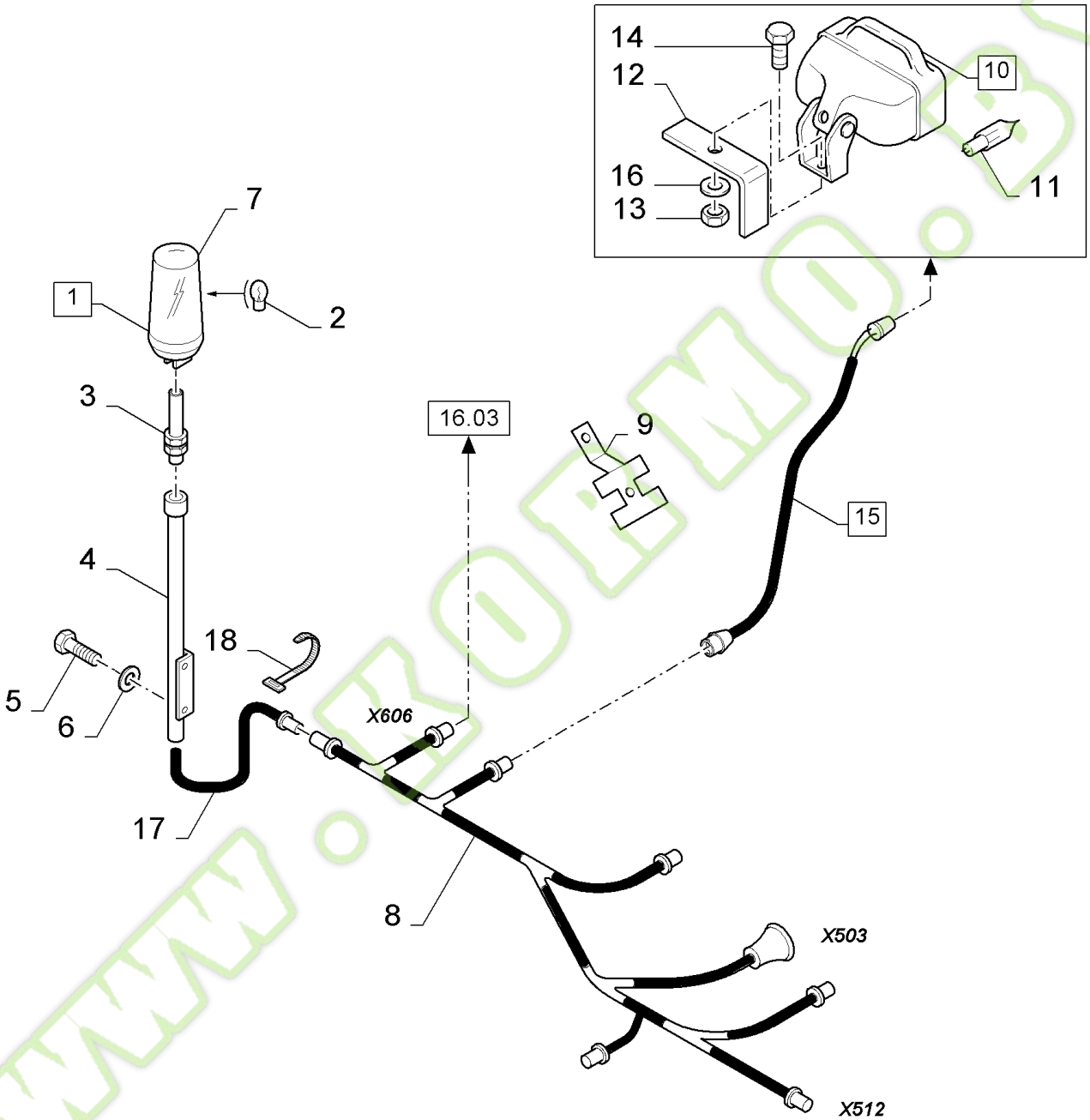

www.ROEMO.BY

FX50 SELF-PROPELLED FORAGE HARVESTER (10/02-)

06.12(01) ELECTRIC WIRING, SPOUT AND FLASHERS

Ref	Part Number	Qty	Description
1	9513421	2	BEACON, ROTATING, {PP:89513421} (2,7)
2	442227	2	BULB, {PP:80442227}
3	9513422	2	CONNECTOR, WIRE, {PP:89513422}
4	84443610	1	TUBE, RH, NOT FOR NA
4	84443609	1	TUBE, LH
5	43138	2	SCREW, {PP:80043138} Hex, M10 x 20, 8.8, Full Thd, M10x20
6	140045	2	WASHER, LOCK, {PP:80140045} Belleville, M10, 10MM
7	84062394	2	LENS,
8	84441363	1	HARNESS, WIRE,
9	84032700	AR	SUPPORT,
10	9837140	1	LAMP, {PP:89837140} (11)
11	NSS	1	NOT SERVICED SEPARATELY, 12V-55W
12	9813909	1	SUPPORT, {PP:89813909}
13	100016	2	NUT, {PP:80100016} M10, Cl 8, M10
14	120041	2	BOLT, {PP:80120041} Short NK, M10 x 20, Cl8.8, Full Thd, M10x20
15	84052156	1	HARNESS, WIRE, (16)
16	140045	2	WASHER, LOCK, {PP:80140045} Belleville, M10, 10MM
17	84001856	2	HARNESS, WIRE,
18	323597	2	STRAP, {PP:80323597} (CLAMP)

www.KOBMO.BY

06.13(01) ADDITIONAL WORK LIGHT: SPOUT

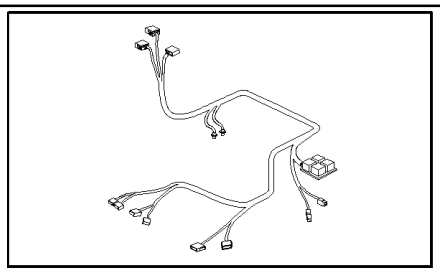

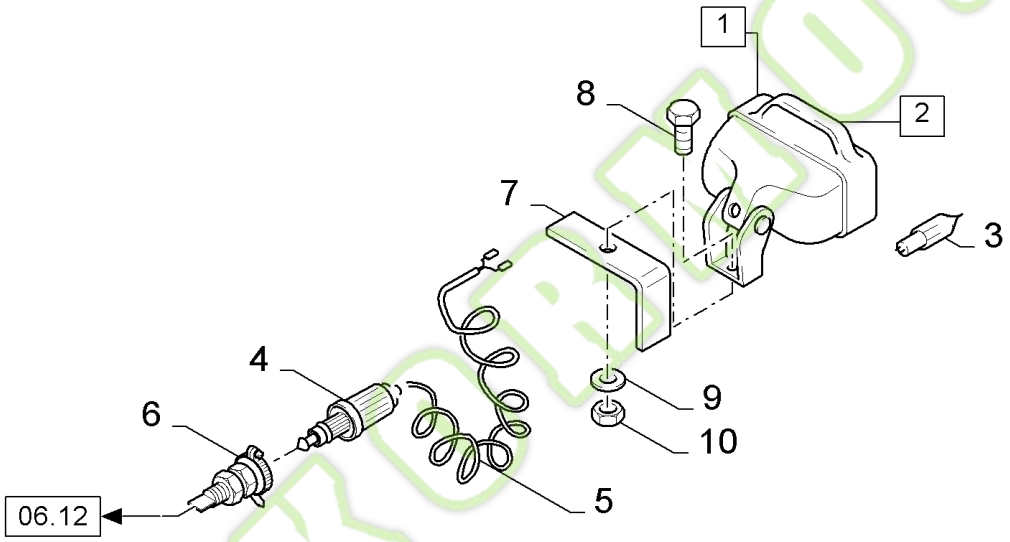

www.KOBETO.BY

FX50 SELF-PROPELLED FORAGE HARVESTER (10/02-)

06.13(01) ADDITIONAL WORK LIGHT: SPOUT

Ref	Part Number	Qty	Description
1	84004176	1	LAMP, WORK, (2 to 5,8 to 10)
2	9837140	1	LAMP, {PP:89837140} (3)
3	NSS	1	NOT SERVICED SEPARATELY, 12V-55W
4	353969	1	CONNECTOR, {PP:80353969}
5	264517	1	HARNESS, WIRE, {PP:80264517}
6	374418	1	SOCKET, POWER, {PP:80374418}
7	9813909	1	SUPPORT, {PP:89813909}
8	120041	2	BOLT, {PP:80120041} Short NK, M10 x 20, Cl8.8, Full Thd, M10x20
9	140045	2	WASHER, LOCK, {PP:80140045} Belleville, M10, 10MM
10	100016	2	NUT, {PP:80100016} M10, Cl 8, M10

www.KOBMO.BY

06.14(01) CHOPPER, HEIGHT INDICATOR

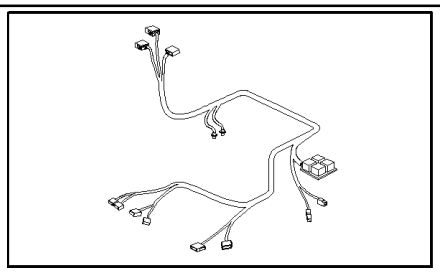

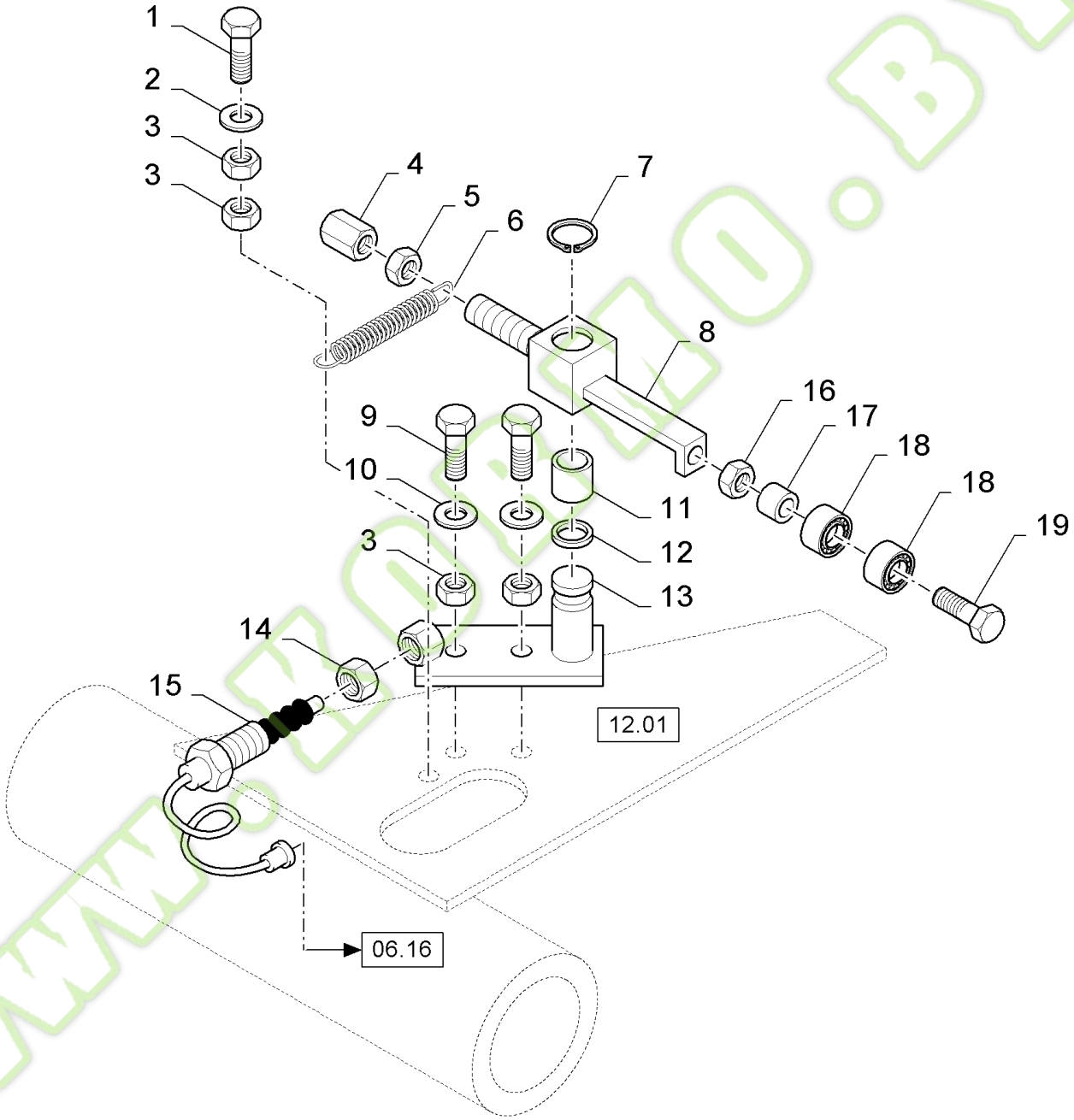

www.BORMO.BY

FX50 SELF-PROPELLED FORAGE HARVESTER (10/02-)

06.14(01) CHOPPER, HEIGHT INDICATOR

Ref	Part Number	Qty	Description
1	120106	1	SCREW, {PP:80120106} Hex, M8 x 40, 8.8, Full Thd, Hex, M8 x 40, 8.8, Full Thd
2	378243	1	WASHER, {PP:80378243} 8MM
3	89706690	4	NUT, CL 8, M8 x 1.25 x 13.0
4	06113193	1	NUT, {PP:84018179} M12
5	337475	1	NUT, {PP:80337475} M12, Cl 10, M12
6	354039	1	SPRING, {PP:80354039}
7	370024	1	RING, SNAP, {PP:80370024}
8	84007582	1	LEVER,
9	412479	2	SCREW, {PP:80412479} Hex, M8 x 35, 8.8, M8x35
10	322358	2	WASHER, LOCK, {PP:80322358} Belleville, M8,
11	382974	2	SLEEVE, {PP:80382974}
12	443434	1	WASHER, {PP:80443434}
13	84007578	1	SUPPORT,
14	100033	1	NUT, {PP:80100033} Thin, M24 x 1.5, Cl 04, M24
15	9513732	1	SENSOR, {PP:89513732}
16	100067	1	NUT, {PP:80100067} M8 x 1.25", Cl 8, M8
17	84017374	1	BUSHING,
18	84017373	AR	BEARING ASSY,
19	43129	1	SCREW, {PP:80043129} Hex, M8 x 40, 8.8, Hex, M8 x 40, 8.8

www.KOBMO.BY

06.15(01) ELECTRIC WIRING, OPERATOR'S PLATFORM

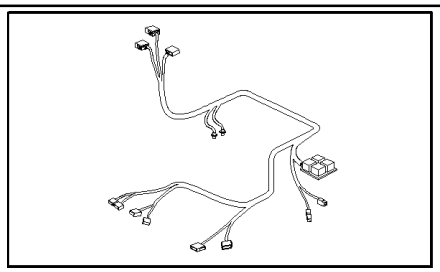

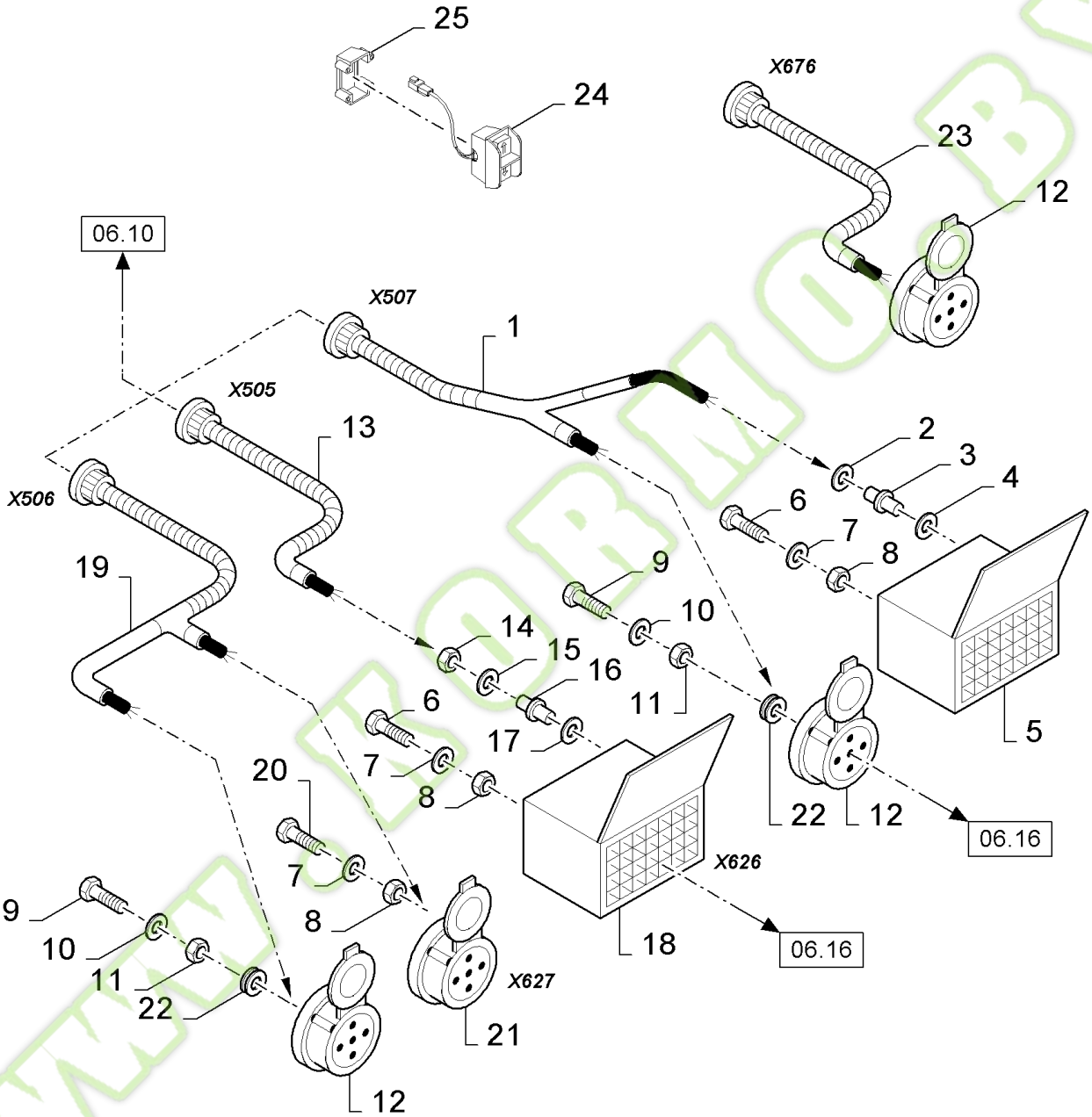

FX50 SELF-PROPELLED FORAGE HARVESTER (10/02-)

06.15(01) ELECTRIC WIRING, OPERATOR'S PLATFORM

Ref	Part Number	Qty	Description
1	84441366	1	HARNESS, WIRE,
2	84019207	1	RING,
3	84019073	1	CONNECTOR, HYD.,
4	84019074	2	RING,
5	84018932	1	CONNECTOR, HYD.,
6	412625	AR	SCREW, {PP:80412625} Cross Pan Hd, M5 x 25, M5x25
7	322356	AR	WASHER, LOCK, {PP:80322356}
8	86508813	AR	NUT, M4, Cl 8, M5
9	412658	6	SCREW, {PP:80412658} Cross Pan Hd, M4 x 40, M4x40
10	322355	6	WASHER, LOCK, {PP:80322355} Belleville, M4, 4MM
11	100012	6	NUT, {PP:80100012} M4, Cl 8, M4
12	398224	2	SOCKET, POWER, {PP:80398224}
13	84441367	1	HARNESS, WIRE, , BSN C289
13	84449800	1	HARNESS, WIRE, , BSN F290305
13	84449838	1	HARNESS, WIRE, , ASN D306
14	84022437	2	NUT, , BSN C305
15	84022438	2	WASHER, LOCK, , BSN C305
16	84022440	2	CONNECTOR, HYD., , BSN C305
17	84022441	1	RING, , BSN C305
18	84018930	1	CONNECTOR, , BSN C305
19	84441365	1	HARNESS, WIRE,
20	84015627	1	SCREW, M5x35
21	84074251	1	CONNECTOR, WIRE,
22	102043	2	GROMMET, {PP:80102043}
23	84446466	1	HARNESS, WIRE, , FOR DIRECT CUT HEADER
24	86627351	1	SWITCH, HEADER HEIGHT
25	86627352	1	CLAMP,

WWW.KUBMO.BY

06.16(01) CUTTERHEAD, ELECTRIC WIRING

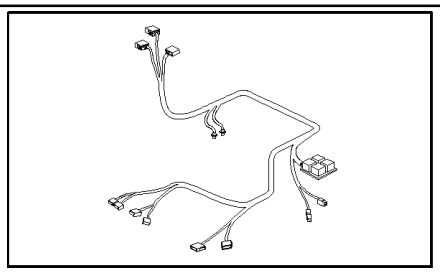

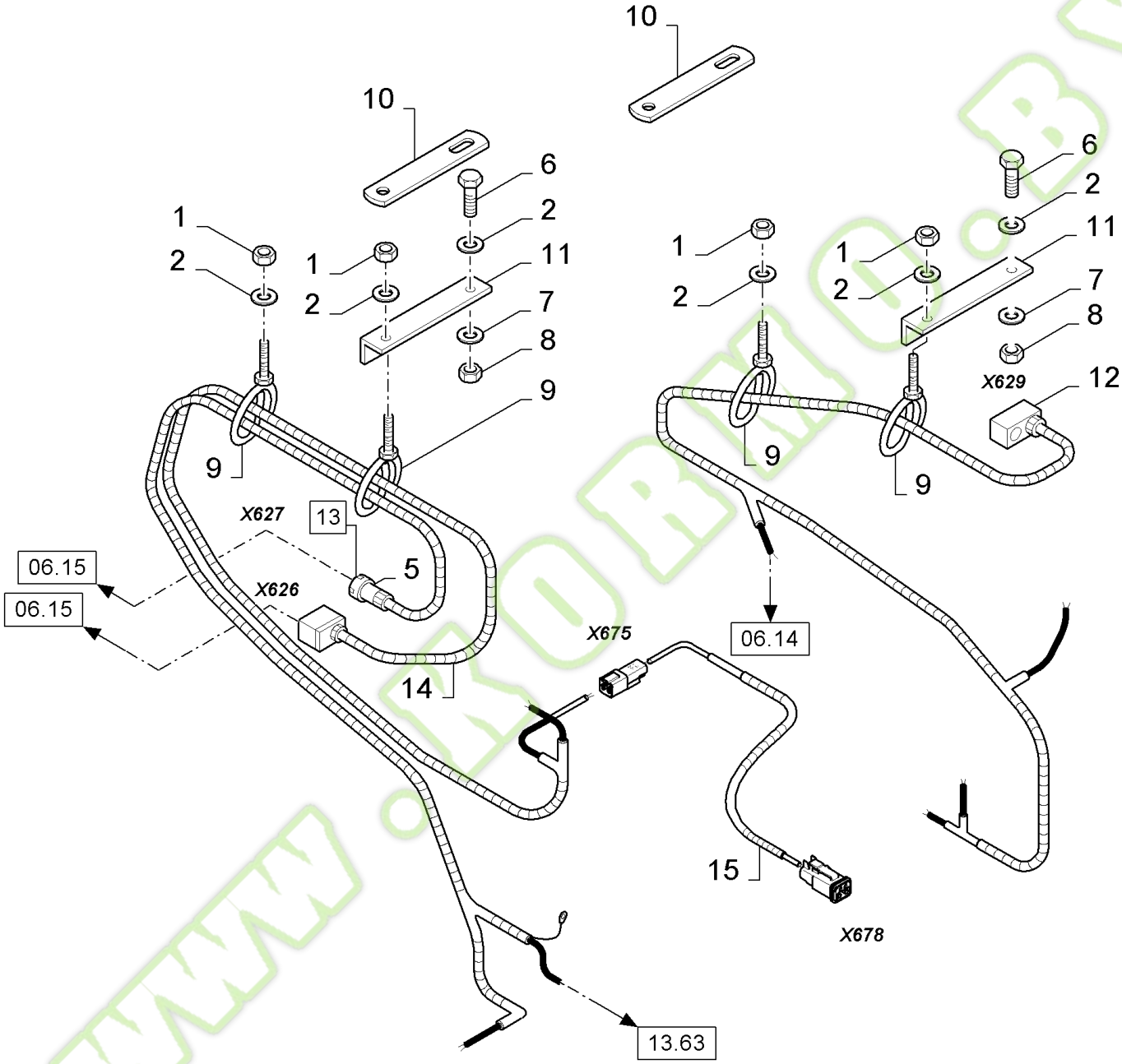

www.KOBMO.BY

FX50 SELF-PROPELLED FORAGE HARVESTER (10/02-)

06.16(01) CUTTERHEAD, ELECTRIC WIRING

Ref	Part Number	Qty	Description
1	9635082	8	NUT, {PP:89635082} 5/16"-18, G5, G5, 5/16"-18
2	322358	6	WASHER, LOCK, {PP:80322358} Belleville, M8, 8MM
3	353308	1	NUT, {PP:80353308} M6 x 1, Cl 8, M6
4	322357	1	WASHER, LOCK, {PP:80322357} Belleville, M6, Belleville, M6
5	84400084	1	CONNECTOR, WIRE,
6	80120104	2	SCREW, M8x20
7	412328	2	WASHER, {PP:80412328} 8MM
8	100067	2	NUT, {PP:80100067} M8 x 1.25", Cl 8, M8
9	84062500	4	RETAINER,
10	84043290	1	PLATE, LH
10	84806467	1	PLATE, RH
11	458491	2	SUPPORT, {PP:80458491}
12	84441370	1	HARNESS, WIRE,
13	84441368	1	HARNESS, WIRE, (5)
14	84441369	1	HARNESS, WIRE, , BSN C289
14	84449805	1	HARNESS, WIRE, , BSN F290305
14	84449837	1	HARNESS, WIRE, , ASN D306
15	84442730	1	HARNESS, WIRE,

www.KOBMO.BY

06.17(01) ELECTRIC WIRING, LOWER FRAME

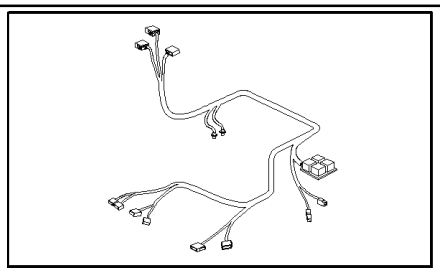

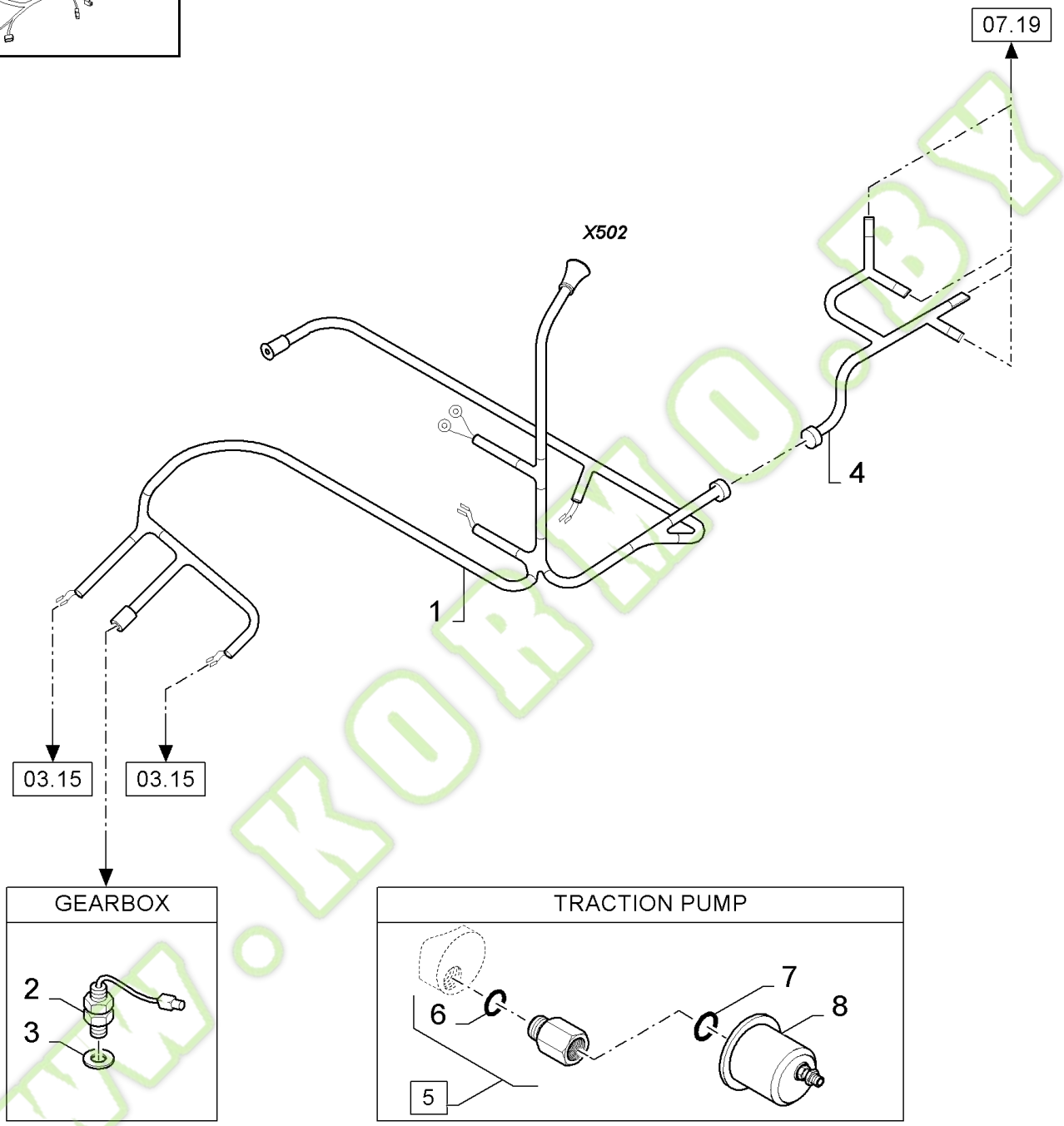

www.KOBMO.BY

FX50 SELF-PROPELLED FORAGE HARVESTER (10/02-)

06.17(01) ELECTRIC WIRING, LOWER FRAME

Ref	Part Number	Qty	Description
1	84441364	1	HARNESS, WIRE,
2	84056991	1	SENSOR,
3	355607	1	RING, {PP:80355607}
4	84052196	1	HARNESS, WIRE,
5	9811374	1	CONNECTOR, HYD., {PP:89811374} (6)
6	9617873	1	O-RING, {PP:89617873} 6-1, 90 Duro, .468" ID x .078" Thk, 6-1, 90 Duro, .468" ID x .078" Thk
7	220049	1	GASKET, {PP:80220049}
8	434529	1	SENDER UNIT, {PP:80434529}

www.KOBMO.BY

06.18(01) ELECTRIC WIRING, BATTERY

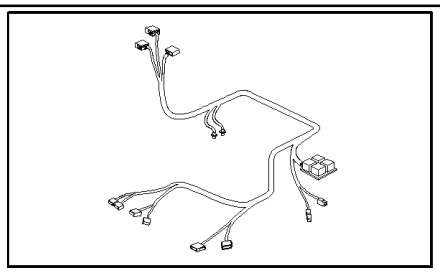

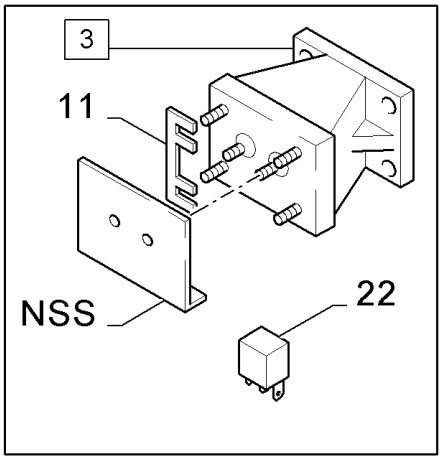

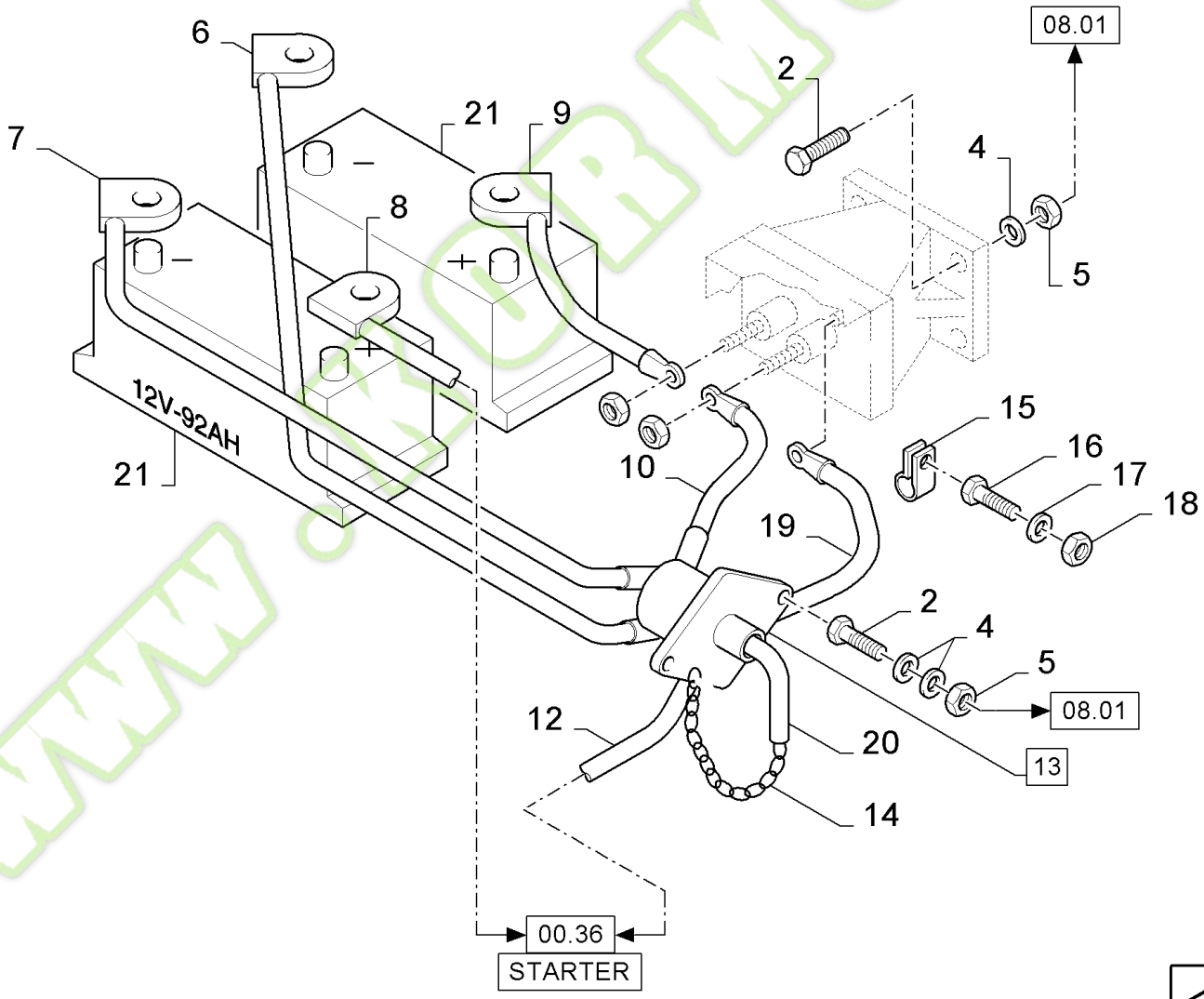

www.kobmo.by

FX50 SELF-PROPELLED FORAGE HARVESTER (10/02-)

06.18(01) ELECTRIC WIRING, BATTERY

Ref	Part Number	Qty	Description
2	43127	6	BOLT, {PP:80043127} Hex, M8 x 25, 8.8, M8x25
3	389120	1	SWITCH, ASSY, (11,22)
4	322358	8	WASHER, LOCK, {PP:80322358} Belleville, M8, 8MM
5	89706690	6	NUT, CL 8, M8 x 1.25 x 13.0
6	84017832	1	CABLE, ELECTRIC,
7	84017831	1	CABLE, ELECTRIC,
8	84017830	1	CABLE, ELECTRIC,
9	84017829	1	CABLE, ELECTRIC,
10	84017834	1	CABLE, ELECTRIC,
11	420580	4	PLATE, {PP:80420580}
12	84004377	1	CABLE, ELECTRIC, , FOR FX30-40-50 ONLY
12	84058315	1	CABLE, ELECTRIC, , FOR FX60 ONLY
13	84005283	1	KEY, LOCK, (20)
14	539289	1	CHAIN, {PP:80539289}
15	418407	1	CLAMP, {PP:80418407}
16	120100	1	BOLT, {PP:80120100} Hex, M6 x 20, 8.8, M6x20
17	322357	1	WASHER, LOCK, {PP:80322357} Belleville, M6, Belleville, M6
18	9706755	1	NUT, {PP:89706755} M6, Cl 8, M6
19	84001812	1	CABLE, ELECTRIC,
20	84607500	1	KEY, LOCK,
21	F885DSW	2	BATTERY, WET, US, Group 49
21	9624940DS	2	BATTERY, DRY, CANADA, Group 49
21	-	2	EU battery, BCI group 434, purchase locally through the direct ship program
22	NSS	1	NOT SERVICED SEPARATELY,

www.KORMO.BY

06.19(01) FRONT ILLUMINATION AND HARNESSES

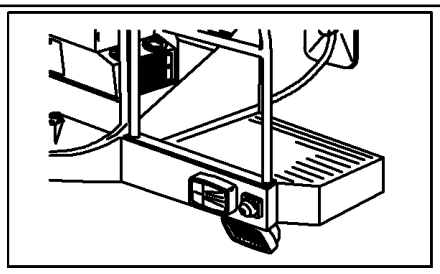

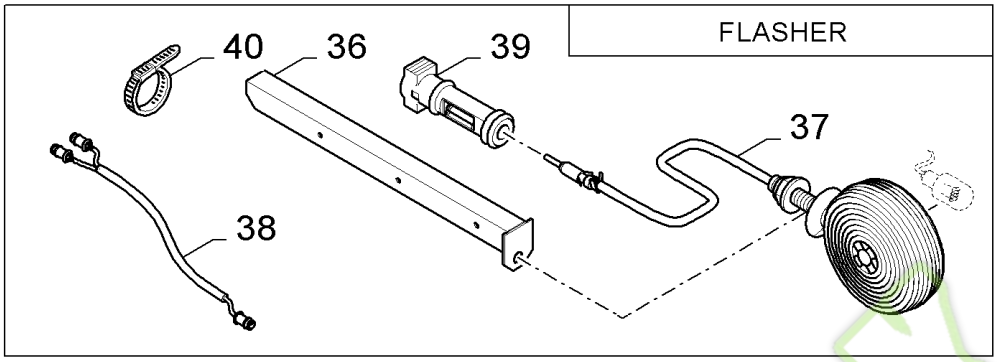

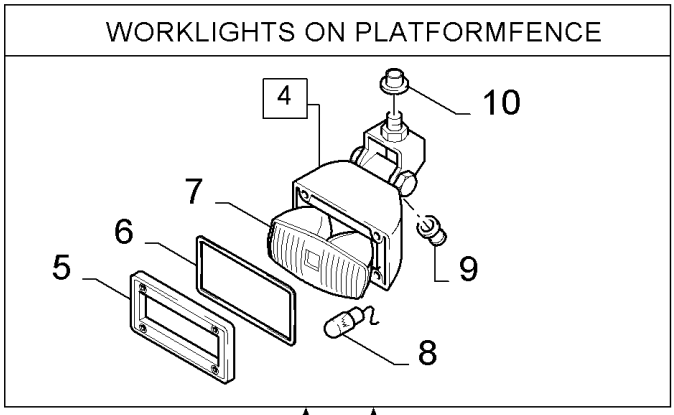

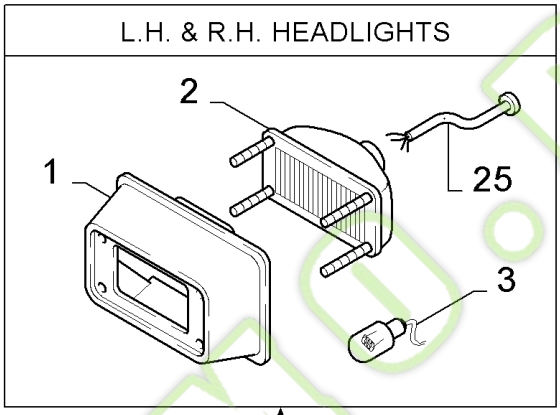

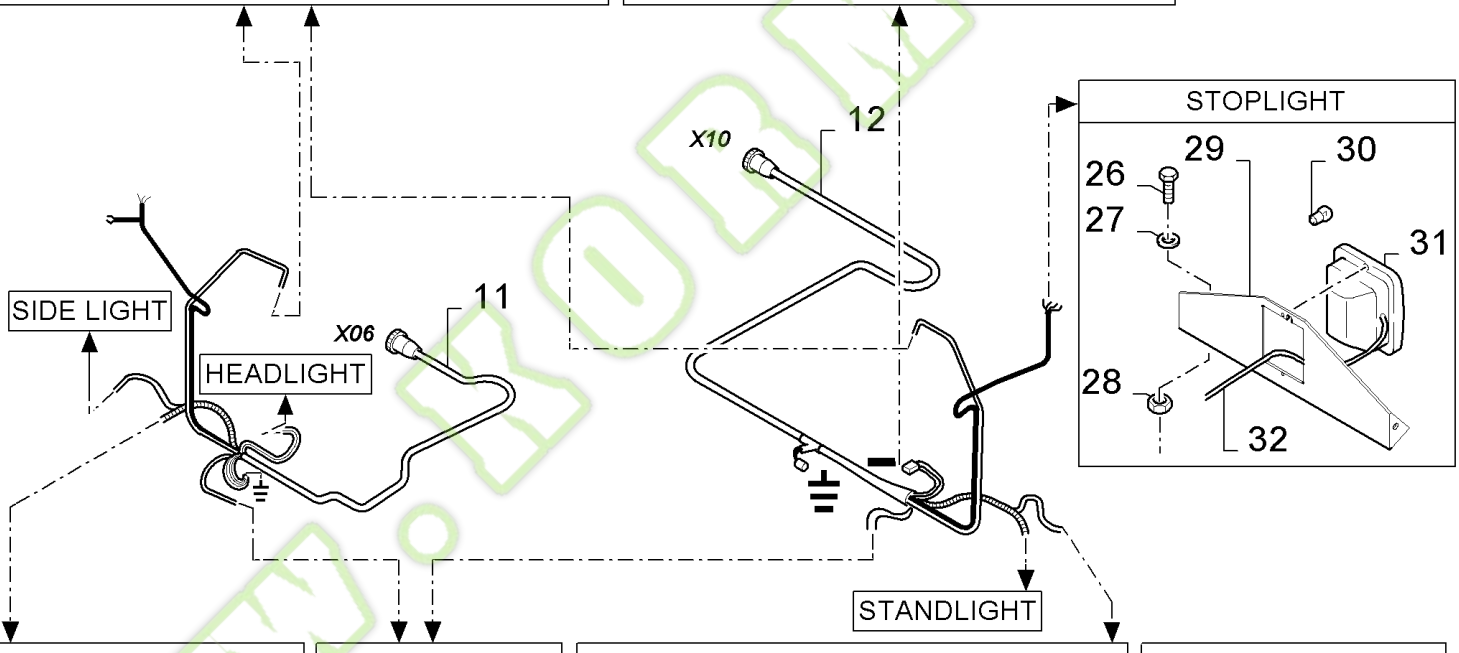

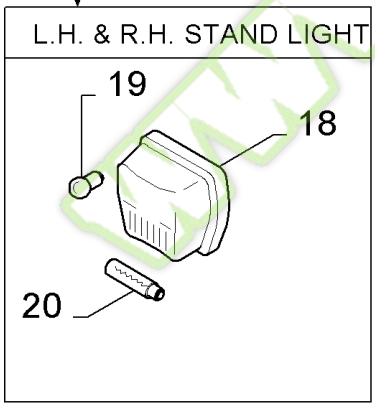

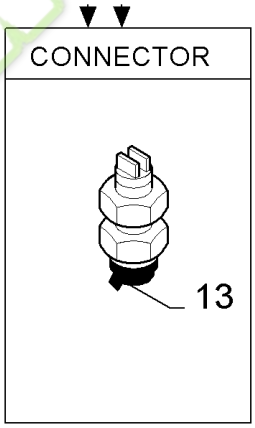

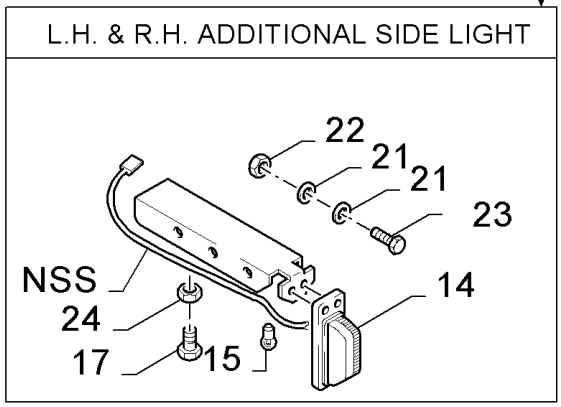

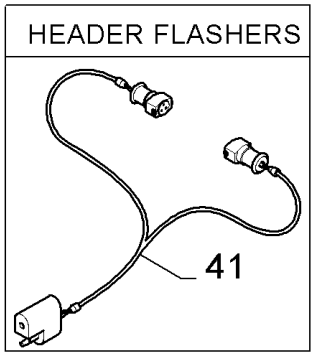

www.KOBMO.BY

FX50 SELF-PROPELLED FORAGE HARVESTER (10/02-)

06.19(01) FRONT ILLUMINATION AND HARNESSES

Ref	Part Number	Qty	Description
1	9819959	2	ARMATURE, {PP:89819959}
2	434926	2	HEADLAMP, {PP:80434926}
2	445490	2	HEADLAMP, {PP:80445490} , FOR U.K. ONLY
3	446592	2	BULB, {PP:80446592}
4	9813938	1	LAMP, {PP:89813938} (5 to 10)
5	9832589	1	COVER, {PP:89832589}
6	9832590	1	SEAL, {PP:89832590}
7	9832591	1	REFLECTOR, LAMP, {PP:89832591}
8	NSS	2	NOT SERVICED SEPARATELY, 12V-55W
9	9832592	1	BUSHING, RUBBER, {PP:89832592}
10	433314	2	PLUG, {PP:80433314}
11	84442679	1	HARNESS, WIRE, RH
12	84442670	1	HARNESS, WIRE, LH
13	374418	2	SOCKET, POWER, {PP:80374418}
14	449531	2	LAMP, {PP:80449531} Rectangle
14	9815829	2	FLASHER UNIT, {PP:89815829} Round
15	353078	2	BULB, {PP:80353078} Rectangle Lamp
15	NSS	2	NOT SERVICED SEPARATELY, Bulb, Trade # 199 - Round Lamp
16	84000884	2	SUPPORT, Rectangle Lamp
16	84014440	2	SUPPORT, Round Lamp
17	120113	2	BOLT, {PP:80120113} Hex, M10 x 50, 8.8, Full Thd, M10x50
18	418871	2	LAMP, {PP:80418871}
18	84818592	2	LAMP, , FOR NA ONLY
19	398877	2	BULB, {PP:80398877}
20	470017	2	BULB, {PP:80470017}
21	322357	8	WASHER, LOCK, {PP:80322357} Belleville, M6, Belleville, M6
22	9706755	4	NUT, {PP:89706755} M6, Cl 8, M6
23	80120099	4	SCREW, Hex, M6 x 16, 8.8, M6x16
24	100016	2	NUT, {PP:80100016} M10, Cl 8, M10
25	84001872	1	HARNESS, WIRE,
26	80120104	2	SCREW, M8x20, FOR NA ONLY
27	322358	2	WASHER, LOCK, {PP:80322358} Belleville, M8, 8MM, FOR NA ONLY
28	89706690	2	NUT, CL 8, M8 x 1.25 x 13.0, FOR NA ONLY
29	84035449	1	SUPPORT, , FOR NA ONLY
30	398877	1	BULB, {PP:80398877} , FOR NA ONLY
31	84041302	1	LAMP, , FOR NA ONLY
32	84035507	1	HARNESS, WIRE, , FOR NA ONLY
36	84014440	2	SUPPORT, , FOR NA ONLY
37	9815829	2	FLASHER UNIT, {PP:89815829} , FOR NA ONLY
38	84001490	2	HARNESS, WIRE, , FOR NA ONLY
39	916786	2	CONNECTOR, WIRE, {PP:80916786} , FOR NA ONLY
40	323597	AR	STRAP, {PP:80323597}
41	84035002	1	HARNESS, WIRE, , FOR NA ONLY

CNH TOOLBOX.BY

06.20(01) ELECTRIC WIRING, IVECO ENGINE

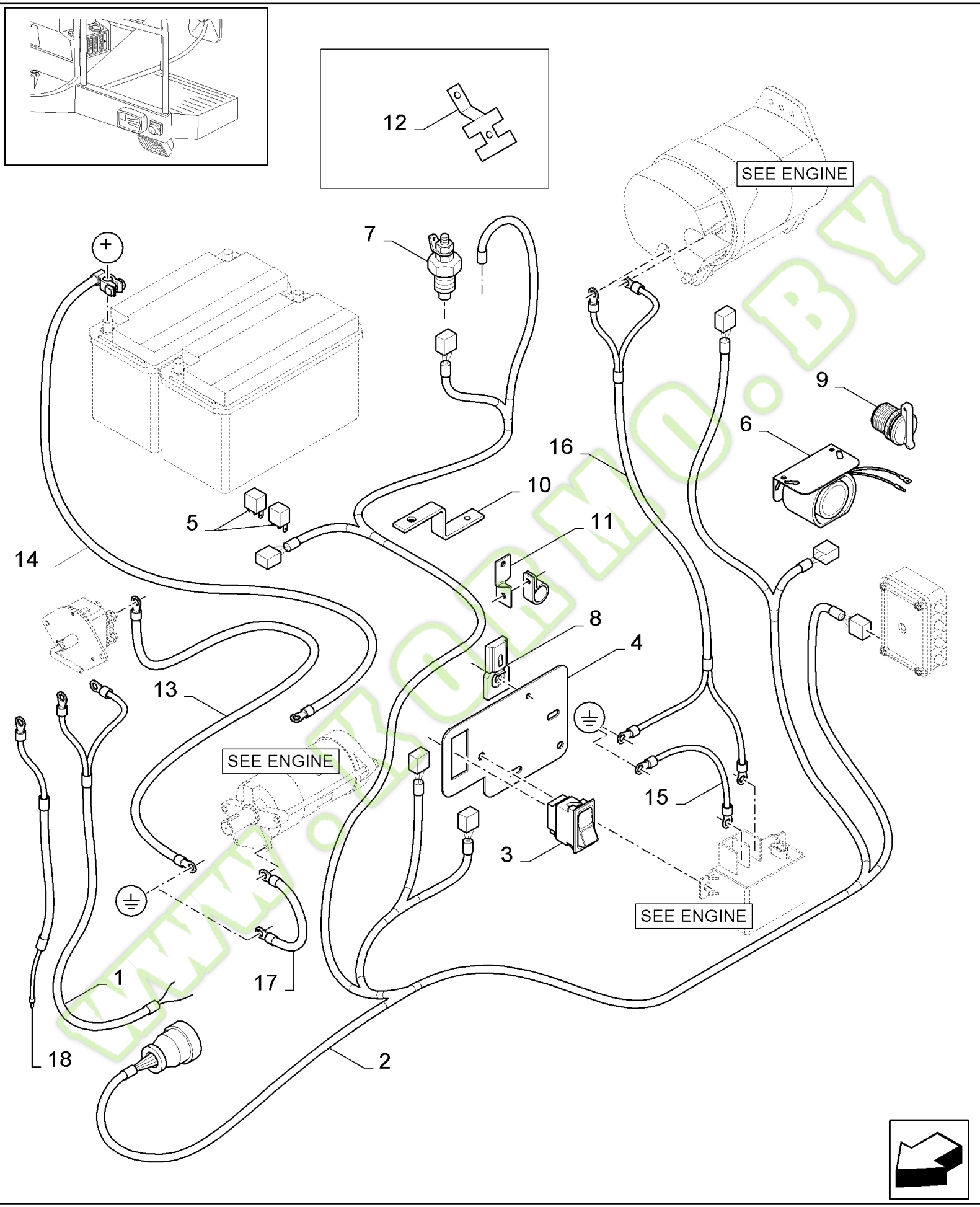

FX50 SELF-PROPELLED FORAGE HARVESTER (10/02-)

06.20(01) ELECTRIC WIRING, IVECO ENGINE

Ref	Part Number	Qty	Description
1	84057100	1	HARNESS, WIRE,
2	84437552	1	HARNESS, WIRE, , BSN C305
2	84449960	1	HARNESS, WIRE, , ASN D306
3	84438670	1	SWITCH,
4	84441548	1	BRACKET,
5	84000651	2	RELAY, , FOR STARTING AND CPU POWER SUPPLY
6	84058690	1	BUZZER,
7	84053657	1	SWITCH, PRESSURE,
8	84807267	1	CONNECTOR, WIRE,
9	374418	1	SOCKET, POWER, {PP:80374418}
10	84437751	1	BRACKET,
11	84437743	1	SUPPORT,
12	84032700	AR	SUPPORT,
13	84437755	1	CABLE, ELECTRIC,
14	84437754	1	CABLE, ELECTRIC,
15	84437672	1	HARNESS, WIRE,
16	84437667	1	HARNESS, WIRE,
17	84437673	1	HARNESS, WIRE,
18	84452653	1	HARNESS, WIRE, , ASN D306

www.KOBMO.BY

06.22(01) INDICATOR "AUTOPILOT"

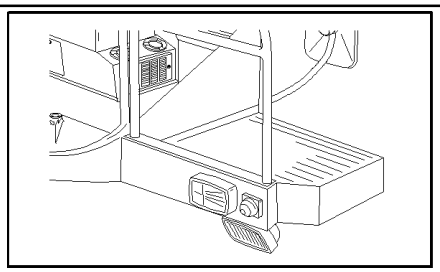

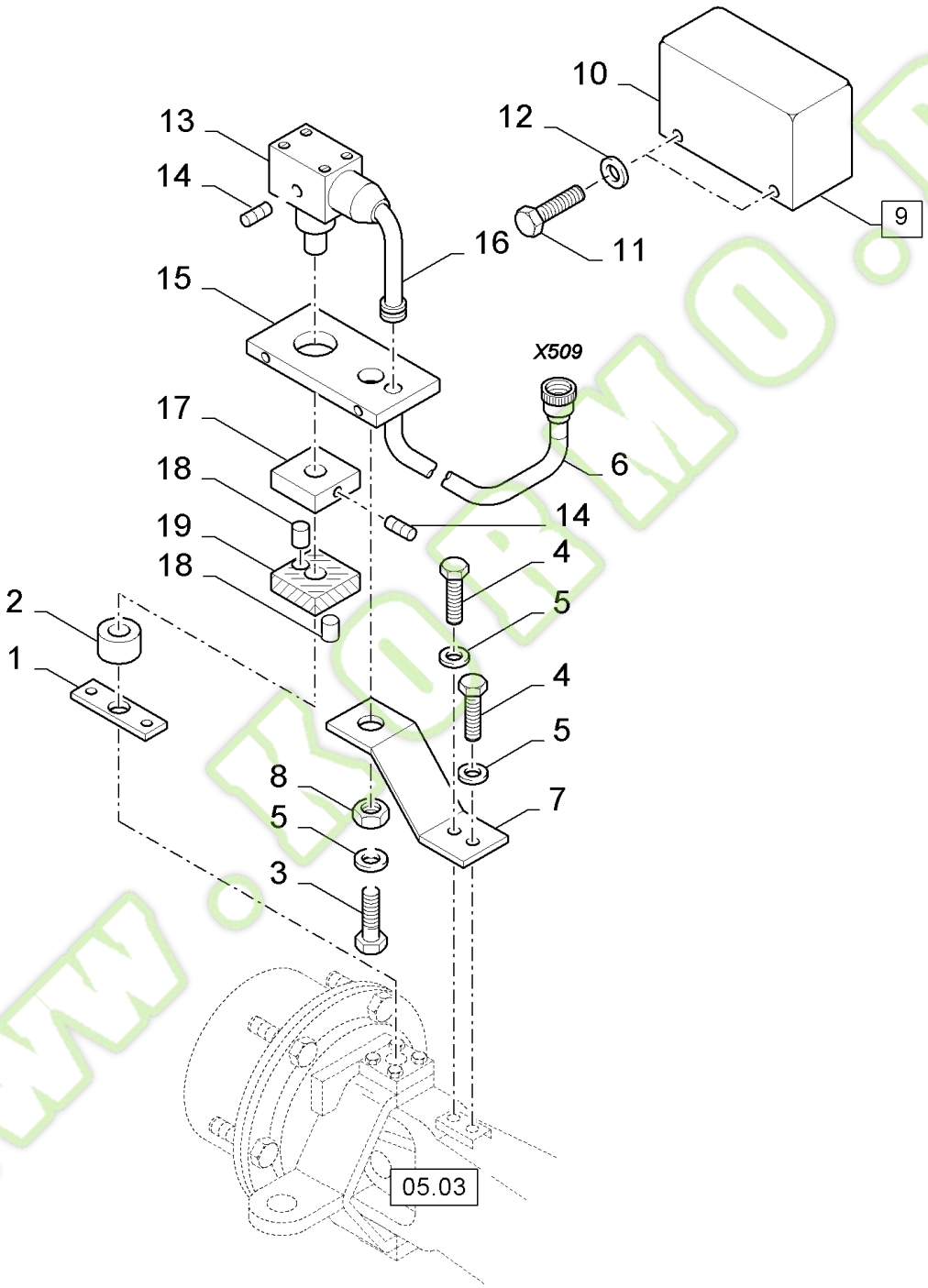

www.KOBMO.BY

FX50 SELF-PROPELLED FORAGE HARVESTER (10/02-)

06.22(01) INDICATOR "AUTOPILOT"

Ref	Part Number	Qty	Description
1	84012750	1	BRACKET, , FOR 4WD ONLY
2	84019470	1	BUSHING, , FOR 2WD ONLY
3	120038	1	BOLT, {PP:80120038} Short NK, M8 x 30, Cl8.8, Full Thd, M8x30
4	43127	2	BOLT, {PP:80043127} Hex, M8 x 25, 8.8, M8x25
5	322358	3	WASHER, LOCK, {PP:80322358} Belleville, M8, 8MM
6	84057105	1	HARNESS, WIRE,
7	84019471	1	SUPPORT, , FOR 2WD ONLY
7	84012751	1	SUPPORT, , FOR 4WD ONLY
8	89706690	1	NUT, CL 8, M8 x 1.25 x 13.0
9	84019469	1	ELECTRONIC UNIT, CONTROL, (10 to 19)
10	89815542	1	COVER,
11	80378056	4	SCREW, M6x10
12	322357	4	WASHER, LOCK, {PP:80322357} Belleville, M6, Belleville, M6
13	89815543	1	SENSOR,
14	84012755	3	SCREW, Hex Soc, M6 x 5, M6x6
15	89815545	1	PLATE,
16	89815544	1	GUIDE,
17	84012753	1	RING,
18	84012756	4	PIN, M4 x 16, Slotted,
19	84012752	1	RING,

www.KOBMO.BY

06.23(01) REAR LIGHTS - NOT FOR NA

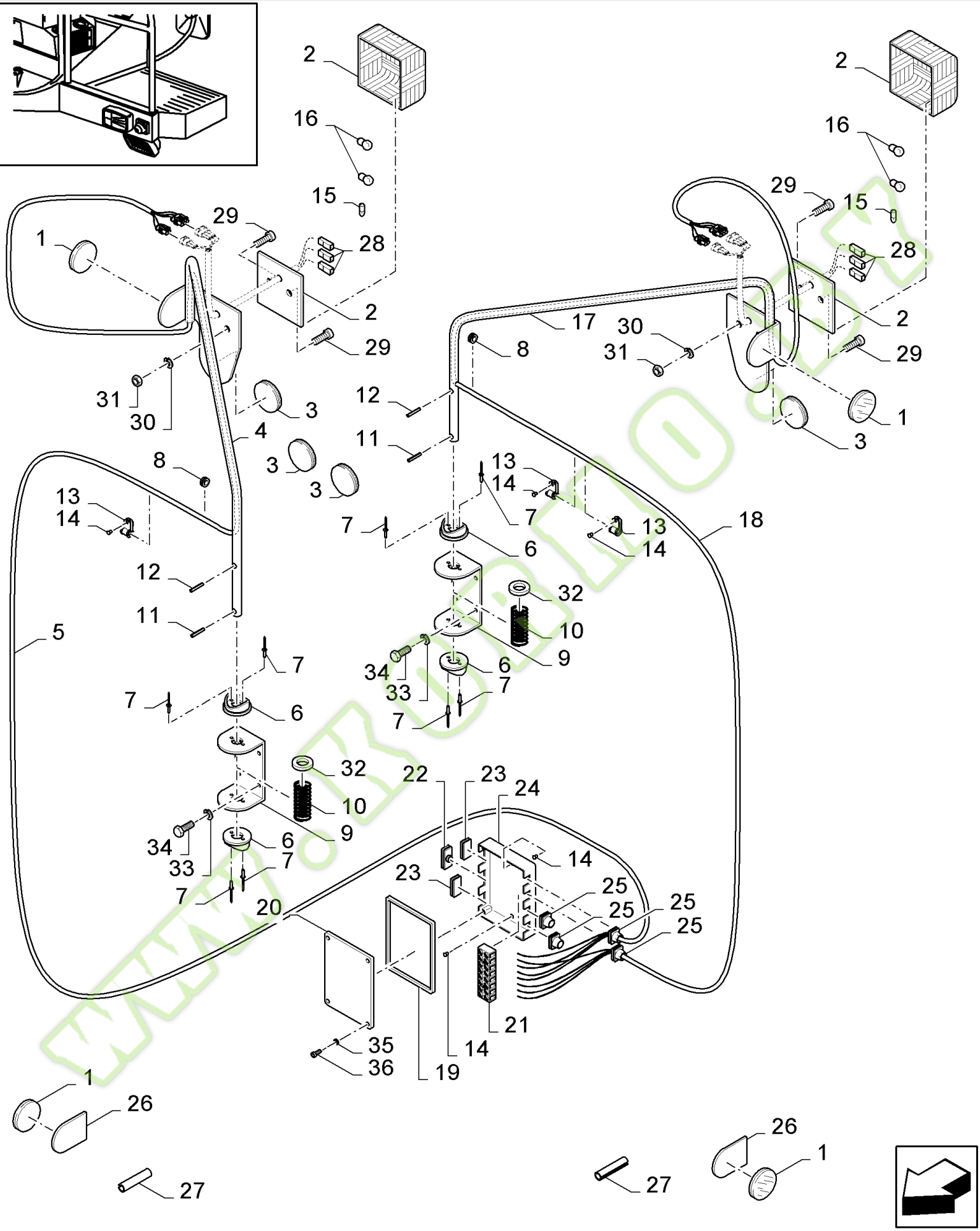

FX50 SELF-PROPELLED FORAGE HARVESTER (10/02-)

06.23(01) REAR LIGHTS - NOT FOR NA

Ref	Part Number	Qty	Description
1	435895	4	REFLECTOR, LAMP, {PP:80435895}
2	84037090	2	LAMP,
3	437024	4	REFLECTOR, LAMP, {PP:80437024}
4	84042648	1	ARM, SUPPORTING, RH, BSN C333
4	84455205	1	ARM, SUPPORTING, RH, ASN D334
5	84035447	1	HARNESS, WIRE, , BSN C333
5	84455238	1	HARNESS, WIRE, , ASN D334
6	921928	4	RING, {PP:80921928}
7	NS	8	NOT SERVICED, RIVET
8	411809	2	GROMMET, {PP:80411809}
9	9814947	2	SUPPORT, {PP:89814947}
10	435967	2	SPRING, {PP:80435967}
11	84022829	2	PIN,
12	9503523	2	PIN, {PP:89503523}
13	9507808	3	CLAMP, {PP:89507808}
14	NS	5	NOT SERVICED,
15	418870	2	BULB, {PP:80418870}
16	398877	4	BULB, {PP:80398877}
17	84042647	1	ARM, SUPPORTING, LH, BSN C333
17	84455208	1	ARM, SUPPORTING, LH, ASN D334
18	84035446	1	HARNESS, WIRE, , BSN C333
18	84455237	1	HARNESS, WIRE, , ASN D334
19	9506873	1	ELEMENT, SEALING, {PP:89506873}
20	9506872	1	COVER, {PP:89506872}
21	433132	1	CONNECTOR, HYD., {PP:80433132}
22	9504343	1	PLUG, {PP:89504343}
23	9508323	2	PLUG, {PP:89508323}
24	9507881	1	HOUSING, {PP:89507881}
25	9504337	4	PLUG, {PP:89504337}
26	84019112	1	PLATE, COVER,
27	80401310	AR	PROFILE,
28	350674	6	CONNECTOR, WIRE, {PP:80350674}
29	120010	4	SCREW, {PP:80120010} M4x16
30	322356	4	WASHER, LOCK, {PP:80322356} 4MM
31	100013	4	NUT, {PP:80100013} M4, Cl 8, M4
32	378248	2	WASHER, {PP:80378248} 25MM
33	120103	8	SCREW, {PP:80120103} Hex, M8 x 16, 8.8, M8x16
34	322358	8	WASHER, LOCK, {PP:80322358} Belleville, M8, 8MM
35	140015	4	WASHER, {PP:80140015} 6MM
36	120014	4	SCREW, {PP:80120014} Cross Pan Hd, M6 x 20, M6x20

WWW.KOBMO.BY

06.23A(01) REAR LIGHTS - FOR NA ONLY

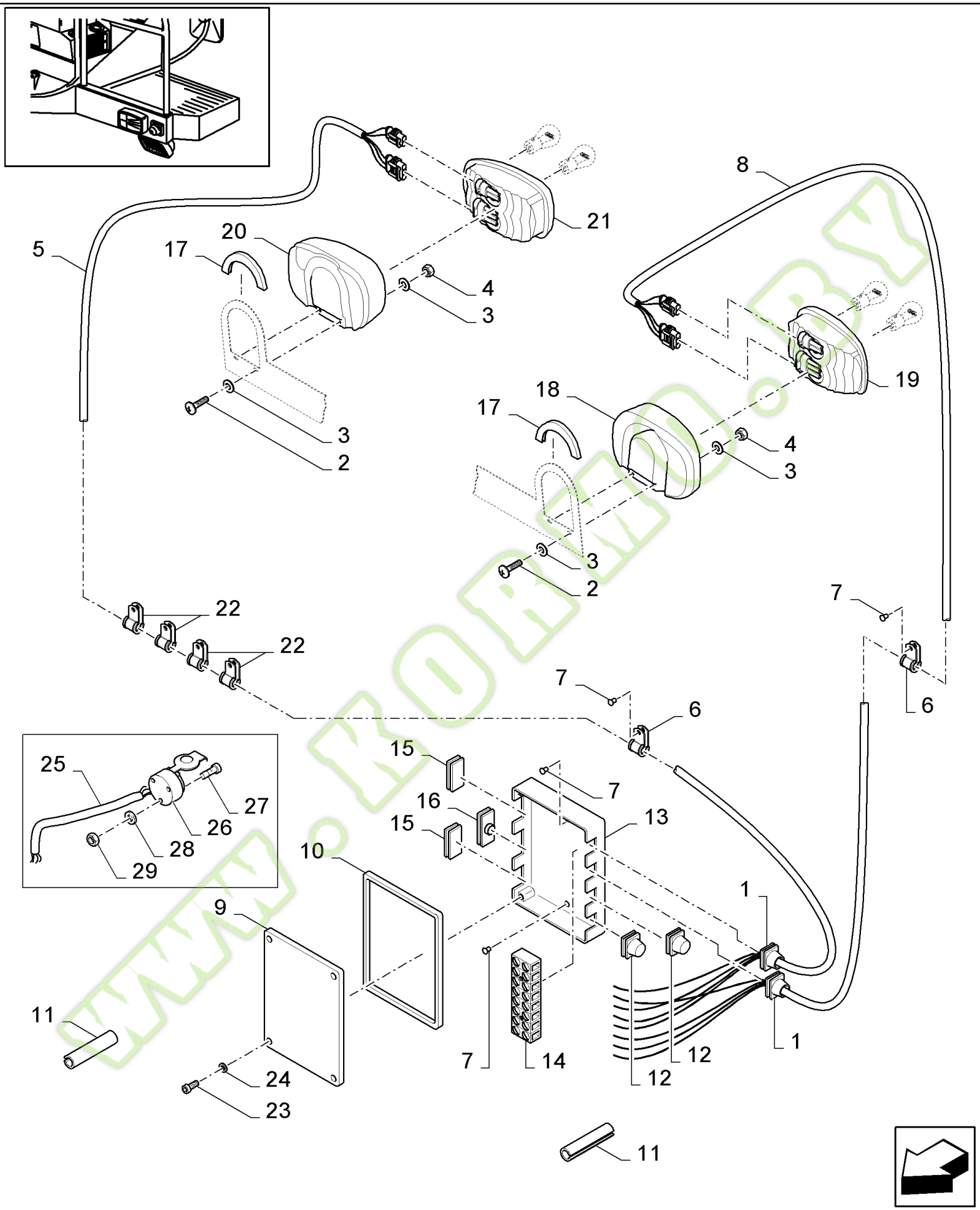

www.ROBMOBY

FX50 SELF-PROPELLED FORAGE HARVESTER (10/02-)

06.23A(01) REAR LIGHTS - FOR NA ONLY

Ref	Part Number	Qty	Description
1	9512597	2	GUIDE, {PP:89512597}
2	120100	4	BOLT, {PP:80120100} Hex, M6 x 20, 8.8, M6x20
3	412649	8	WASHER, LOCK, {PP:80412649} Belleville, M6, Belleville, M6
4	9706755	4	NUT, {PP:89706755} M6, Cl 8, M6
5	84446580	1	HARNESS, WIRE,
6	9503928	2	CLAMP, {PP:89503928}
7	NS	4	NOT SERVICED, RIVET
8	84446578	1	HARNESS, WIRE,
9	9506872	1	COVER, {PP:89506872}
10	9506873	1	ELEMENT, SEALING, {PP:89506873}
11	80401310	AR	PROFILE,
12	9504337	2	PLUG, {PP:89504337}
13	9507881	1	HOUSING, {PP:89507881}
14	433132	1	CONNECTOR, HYD., {PP:80433132}
15	9508323	2	PLUG, {PP:89508323}
16	9504343	1	PLUG, {PP:89504343}
17	84806244	2	INSULATION, FOAM,
18	84607391	1	HOUSING,
19	84429840	1	LAMP,
20	84607390	1	HOUSING,
21	84429841	1	LAMP,
22	431352	4	CLAMP, {PP:80431352}
23	120014	4	SCREW, {PP:80120014} Cross Pan Hd, M6 x 20, M6x20
24	140015	4	WASHER, {PP:80140015}
25	84061106	1	HARNESS, WIRE,
26	265927	1	SOCKET, POWER, {PP:80265927}
27	80120104	2	SCREW, M8x20
28	322358	2	WASHER, LOCK, {PP:80322358} Belleville, M8, 8MM
29	89706690	2	NUT, M8

www.KORMO.BY

06.24(01) ILLUMINATION KIT, ROW INDEPENDENT HEADERS

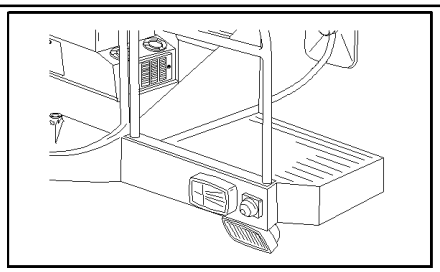

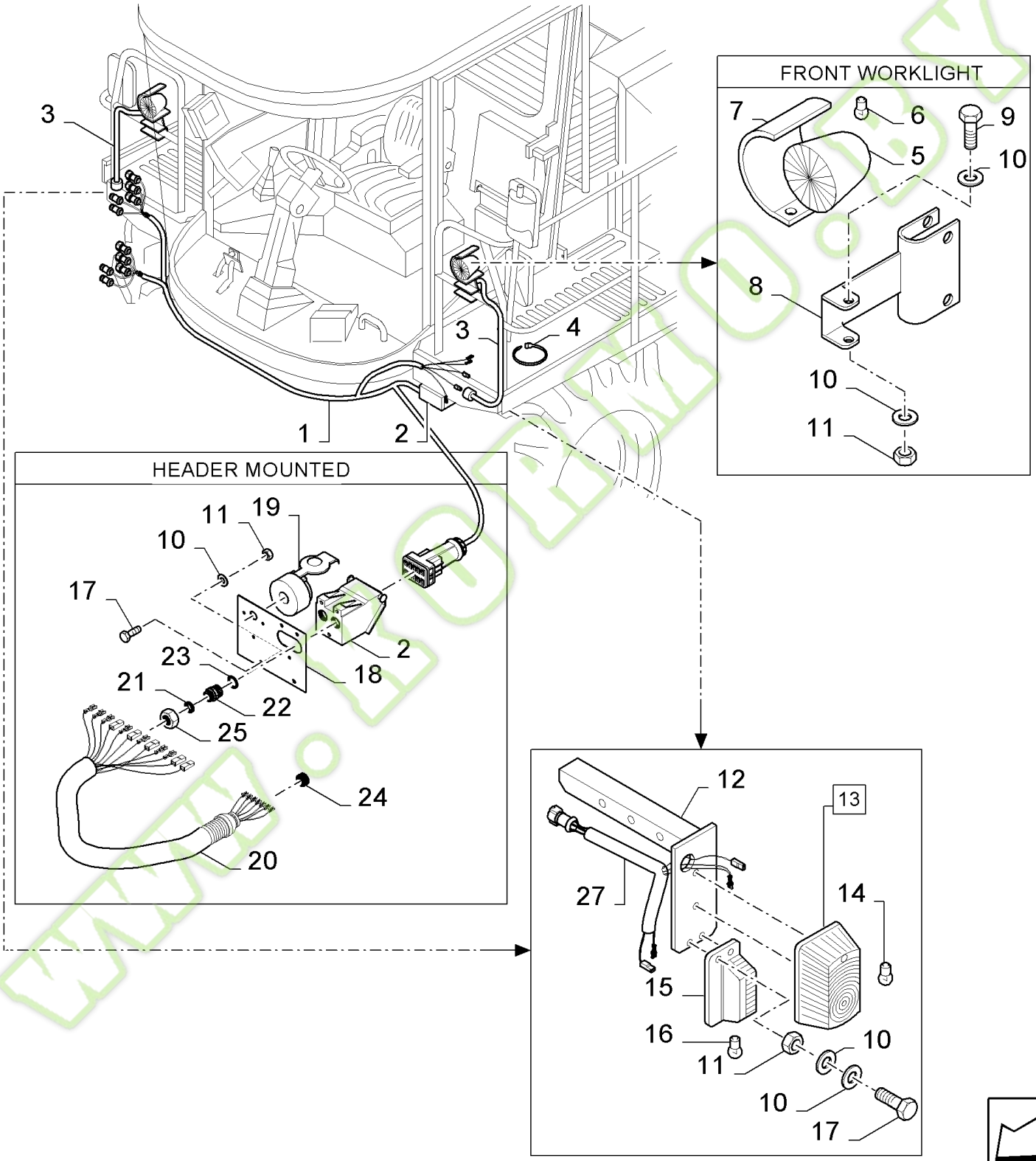

FX50 SELF-PROPELLED FORAGE HARVESTER (10/02-)

06.24(01) ILLUMINATION KIT, ROW INDEPENDENT HEADERS

Ref	Part Number	Qty	Description
1	84035114	1	HARNESS, WIRE,
2	84018930	2	CONNECTOR,
3	84052997	2	HARNESS, WIRE,
4	323597	18	STRAP, {PP:80323597}
5	418863	2	LAMP, {PP:80418863}
6	446592	2	BULB, {PP:80446592}
7	84039151	2	PLATE, COVER,
8	84056316	2	BRACKET,
9	120056	4	SCREW, {PP:80120056} Hex, M6 x 50, 8.8, M6x50
10	322357	18	WASHER, LOCK, {PP:80322357} Belleville, M6, Belleville, M6
11	9706755	10	NUT, {PP:89706755} M6, Cl 8, M6
12	84007957	2	SUPPORT,
13	84011215	1	LAMP ASSY, SIDE, RH
13	84011216	1	LAMP ASSY, SIDE, LH
14	398877	2	BULB, {PP:80398877} 12V-21W
15	449531	2	LAMP, {PP:80449531}
16	353078	2	BULB, {PP:80353078}
17	80120099	6	SCREW, Hex, M6 x 16, 8.8, M6x16
18	84039153	1	SUPPORT,
19	398224	1	SOCKET, POWER, {PP:80398224}
20	84035127	1	HARNESS, WIRE,
21	84022438	2	WASHER, LOCK,
22	84022440	1	CONNECTOR, HYD.,
23	84022441	2	RING,
24	46288	1	GROMMET, {PP:80046288}
25	84022437	2	NUT,
27	84007954	2	HARNESS, WIRE,

www.KOBMO.BY

06.25(01) WORK LIGHTS, REAR

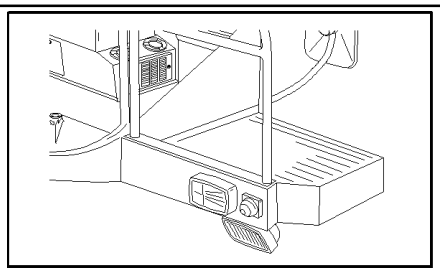

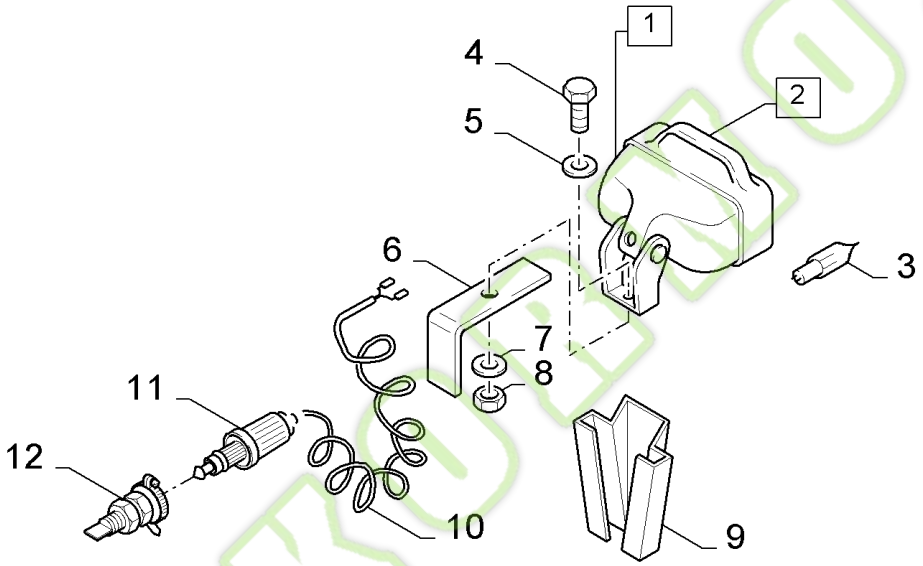

www.KUBO.BY

FX50 SELF-PROPELLED FORAGE HARVESTER (10/02-)

06.25(01) WORK LIGHTS, REAR

Ref	Part Number	Qty	Description
1	84004176	1	LAMP, WORK, (2 to 5,7,8,10,11)
2	9837140	1	LAMP, {PP:89837140} (3)
3	417720	AR	BULB, {PP:80417720} 12V-55W
4	80120104	2	SCREW, M8x20
5	378243	2	WASHER, {PP:80378243}
6	9813909	1	SUPPORT, {PP:89813909}
7	322358	2	WASHER, LOCK, {PP:80322358} Belleville, M8,
8	89706690	2	NUT, CL 8, M8 x 1.25 x 13.0
9	9837606	1	CLIP, {PP:89837606}
10	264517	1	HARNESS, WIRE, {PP:80264517}
11	353969	1	CONNECTOR, {PP:80353969}
12	374418	1	SOCKET, POWER, {PP:80374418}

www.KOBMO.BY

06.26(01) REAR LIGHTS

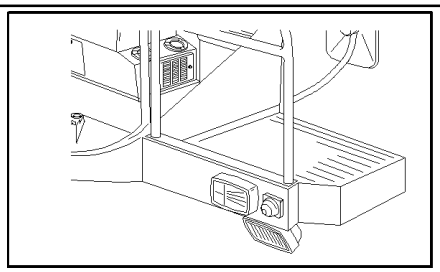

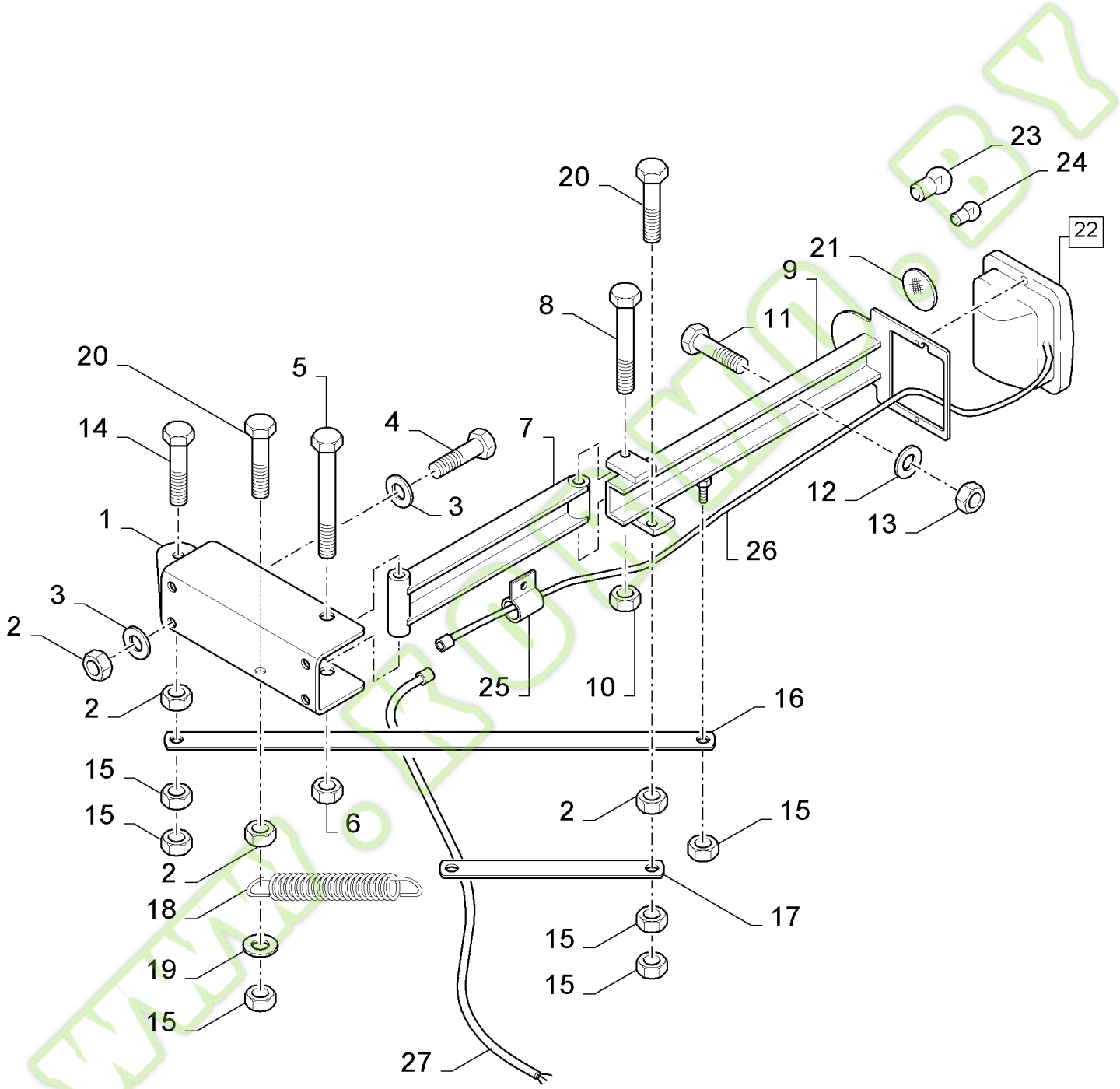

FX50 SELF-PROPELLED FORAGE HARVESTER (10/02-)

06.26(01) REAR LIGHTS

Ref	Part Number	Qty	Description
1	84041238	1	SUPPORT,
2	89706690	6	NUT, CL 8, M8 x 1.25 x 13.0
3	322358	8	WASHER, LOCK, {PP:80322358} Belleville, M8, 8MM
4	120106	4	SCREW, {PP:80120106} Hex, M8 x 40, 8.8, Full Thd, Hex, M8 x 40, 8.8, Full Thd
5	80309308	1	SCREW, M12x120
6	100038	1	NUT, LOCK, {PP:80100038} M12 x 1.75, Cl 8, M12
7	84041244	1	SUPPORT,
8	120072	1	SCREW, {PP:80120072} Hex, M10 x 70, 8.8, M10x70
9	84041239	1	SUPPORT,
10	100037	1	NUT, {PP:80100037} M10 x 1.5, Cl 8, M10
11	916454	1	DAMPER, {PP:80916454}
12	322357	1	WASHER, LOCK, {PP:80322357} Belleville, M6, Belleville, M6
13	9706755	1	NUT, {PP:89706755} M6, Cl 8, M6
14	120060	AR	SCREW, {PP:80120060} Hex, M8 x 50, 8.8, M8x50
15	100067	AR	NUT, {PP:80100067} M8 x 1.25", Cl 8, M8
16	84041249	1	SUPPORT,
17	84041248	1	SUPPORT,
18	84014792	1	SPRING,
19	378243	AR	WASHER, {PP:80378243} 8MM
20	120058	AR	SCREW, {PP:80120058} Hex, M8 x 30, 8.8, M8x30
21	437024	1	REFLECTOR, LAMP, {PP:80437024}
22	84041302	1	LAMP, (23,24)
23	418870	1	BULB, {PP:80418870} Taillight 10W
24	398877	1	BULB, {PP:80398877} Stoplight 21W
25	9503928	4	CLAMP, {PP:89503928}
26	84035084	1	HARNESS, WIRE,
27	84035294	1	HARNESS, WIRE, , FOR STANDARD LIGHT ONLY

www.KOBMO.BY

FOR GERMANY ONLY

06.51(01) TERMINALS AND TERMINAL CONNECTORS

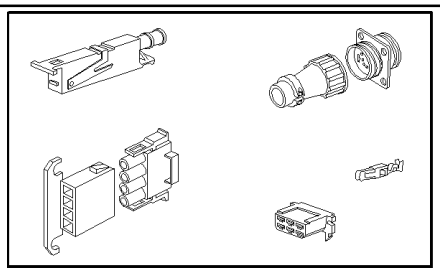

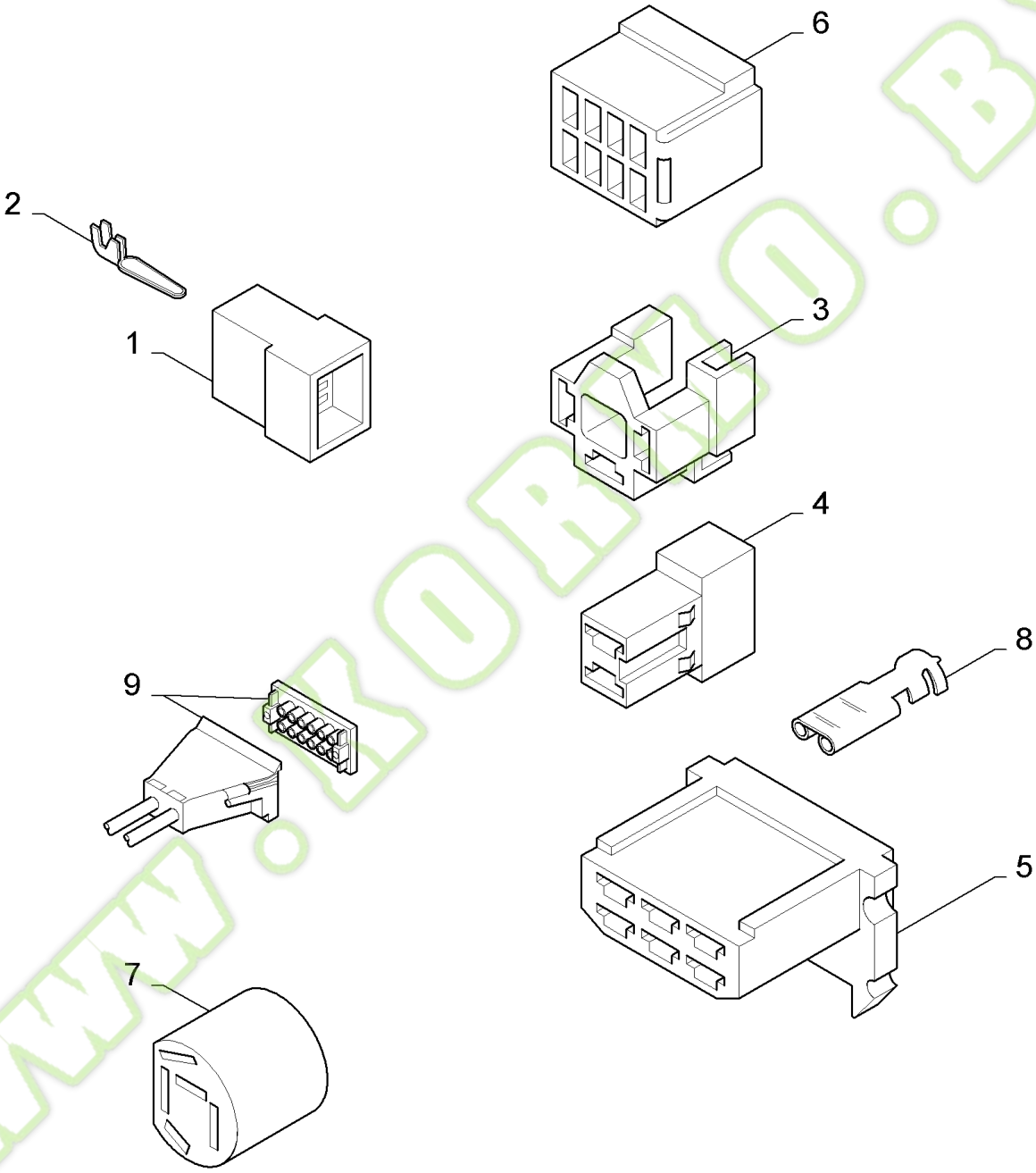

www.KOBMO.BY

06.51(01) TERMINALS AND TERMINAL CONNECTORS

Ref	Part Number	Qty	Description
1	334699	AR	TERMINAL, {PP:80334699} 2-WH-M
2	334724	AR	TERMINAL, {PP:80334724} M 0.8-2.5
3	751307	AR	TERMINAL, {PP:80751307} 2-CL-M
4	334589	AR	CONNECTOR, WIRE, {PP:80334589} 1-WH-F
4	334698	AR	CONNECTOR, {PP:80334698} 2-WH-F
4	84015523	AR	CONNECTOR, F-2WT-V
5	334595	AR	TERMINAL, {PP:80334595} 6-WH-F
6	9503638	AR	CONNECTOR, WIRE, {PP:89503638} 8-BL-F
6	9503639	AR	CONNECTOR, WIRE, {PP:89503639} 2-BL-F
7	9850818	AR	TERMINAL, {PP:89850818} 5-BK-F
8	334588	AR	TERMINAL, {PP:80334588} F 1.0-2.5
8	334594	AR	TERMINAL, {PP:80334594} F 4-6
8	751308	AR	TERMINAL, {PP:80751308} F,Flag type
9	84018931	AR	CONNECTOR, P12
9	84018933	AR	CONNECTOR, T17

www.KOBMO.BY

06.52(01) TERMINALS AND TERMINAL CONNECTORS

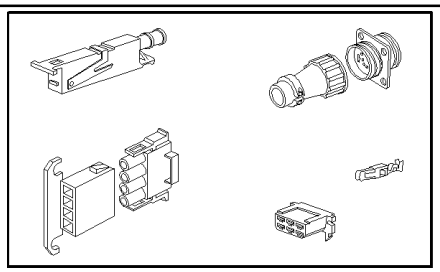

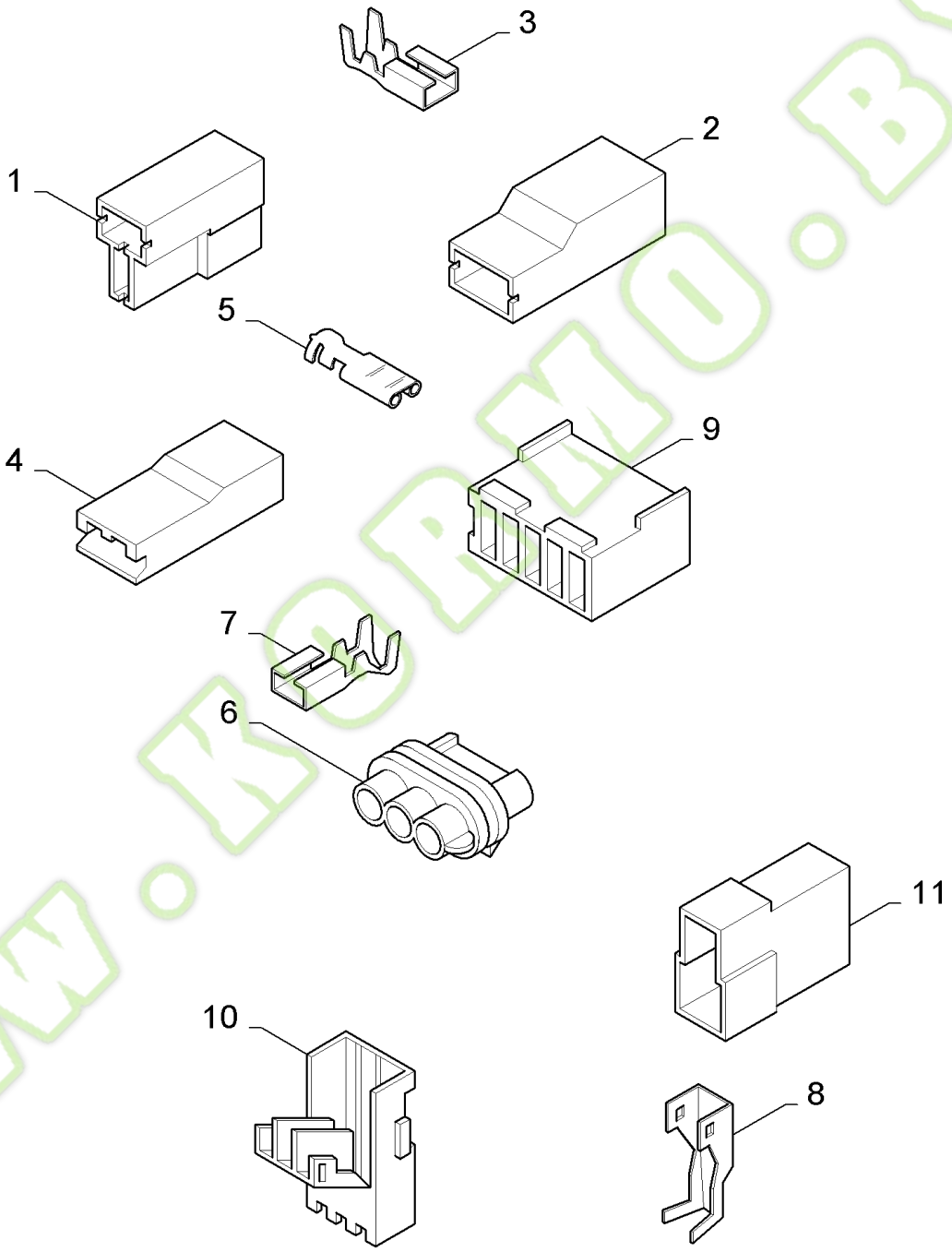

www.KOBMO.BY

06.52(01) TERMINALS AND TERMINAL CONNECTORS

Ref	Part Number	Qty	Description
1	446133	AR	CONNECTOR, {PP:80446133} 2-BK-F
2	441159	AR	CONNECTOR, WIRE, {PP:80441159} 1-BK-F
3	441166	AR	TERMINAL, {PP:80441166} M 0.7-2
3	84449722	AR	TERMINAL, F 1
3	441167	AR	TERMINAL, {PP:80441167} F 2.5-4
3	919415	AR	TERMINAL, {PP:80919415} M 4-6
4	350674	AR	CONNECTOR, WIRE, {PP:80350674}
5	430026	AR	TERMINAL, {PP:80430026} 1-2.5
5	84018980	AR	CONNECTOR, 0.5-1.5
6	84000181	AR	TERMINAL, 3-BK-F
7	84000182	AR	TERMINAL, 1-2
8	84007052	AR	TERMINAL,
9	84007631	AR	TERMINAL, 5-BK-M
10	84007053	AR	CONNECTOR, WIRE, 3-BK
11	84038366	AR	CONNECTOR, WIRE,

www.KOBMO.BY

06.53(01) TERMINALS AND TERMINAL CONNECTORS

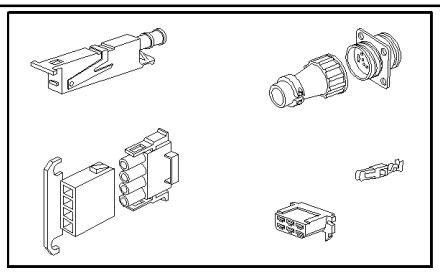

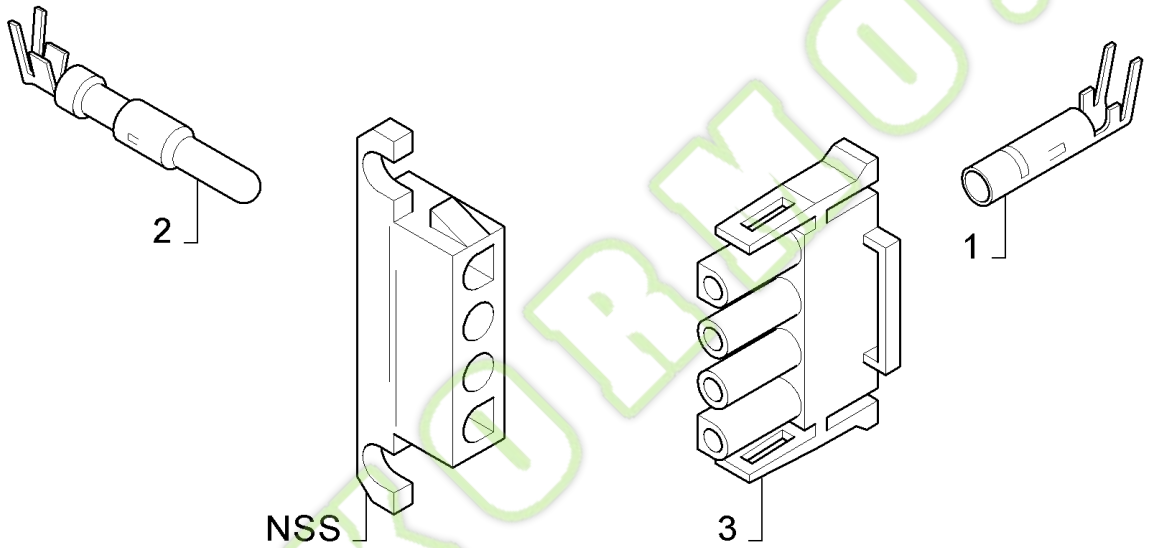

www.KUBO.BY

06.53(01) TERMINALS AND TERMINAL CONNECTORS

Ref	Part Number	Qty	Description
1	442243	AR	CONNECTOR, {PP:80442243} F 1.5-3.3
1	9509740	AR	CONNECTOR, {PP:89509740} 9-RD-M
2	9509742	AR	CONNECTOR, {PP:89509742} M 0.5-2.1
3	442242	AR	CONNECTOR, {PP:80442242} 4-RD-F
3	9503129	AR	CONNECTOR, WIRE, {PP:89503129} 9-RD-F
3	9850920	AR	TERMINAL, {PP:89850920} 15-RD-F
3	84004676	AR	CONNECTOR, WIRE, 3-WH-F
3	9511181	AR	CONNECTOR, WIRE, {PP:89511181} 6-RD-F

www.KOBMO.BY

06.54(01) TERMINALS AND TERMINAL CONNECTORS

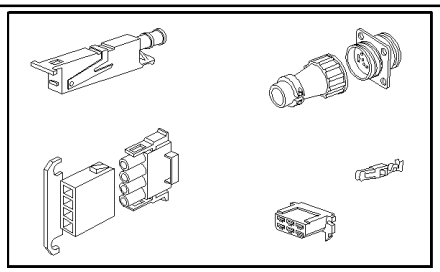

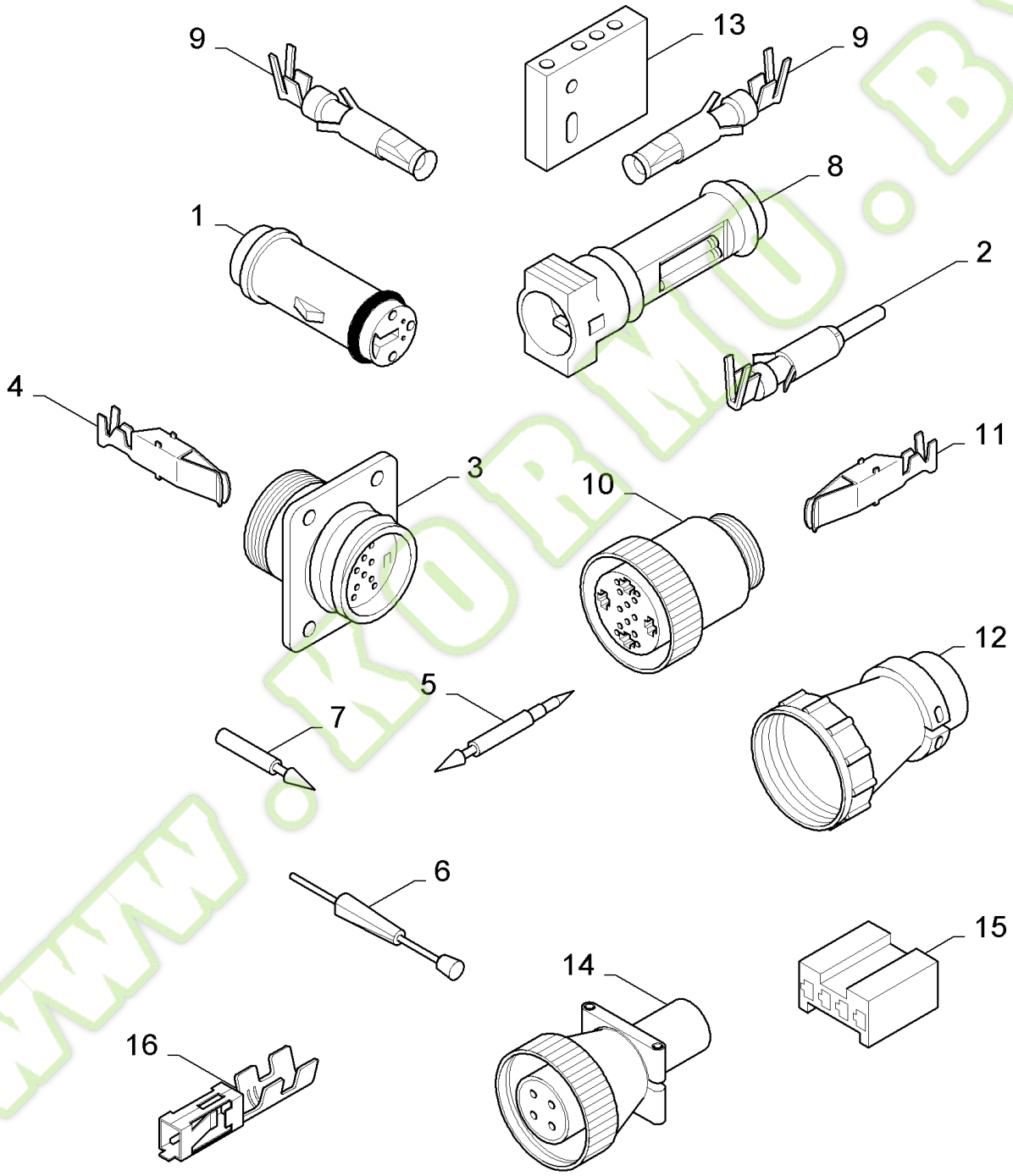

www.KORMU.BY

06.54(01) TERMINALS AND TERMINAL CONNECTORS

Ref	Part Number	Qty	Description
1	916785	AR	CONNECTOR, {PP:80916785} 2-BK-M
1	9510662	AR	CONNECTOR, WIRE, {PP:89510662} 3-BK-M
1	916790	AR	CONNECTOR, WIRE, {PP:80916790} 4-BK-M
2	9516242	AR	TERMINAL, {PP:89516242} M 0.5-1.5
2	445521	AR	TERMINAL, {PP:80445521} M 1-2.5
3	445746	AR	CONNECTOR, WIRE, {PP:80445746} 3-BK-M
3	9504366	AR	CONNECTOR, {PP:89504366} 7-BK-M
3	447569	AR	CONNECTOR, WIRE, {PP:80447569} 16-BK-M
3	9818033	AR	CONNECTOR, WIRE, {PP:89818033} 22-BK-M
3	9504364	AR	CONNECTOR, {PP:89504364} 24-BK-M
3	9814978	AR	CONNECTOR, {PP:89814978} 37-BK-M
4	445517	AR	TERMINAL, {PP:80445517} M 1.5-4
4	445520	AR	TERMINAL, {PP:80445520} M 5-8
5	916795	AR	TOOL, SPECIAL, {PP:80916795} Mounting
6	679968	AR	TOOL, SPECIAL, {PP:80679968} Dismounting
7	916794	AR	TOOL, SPECIAL, {PP:80916794} Mounting
8	916786	AR	CONNECTOR, WIRE, {PP:80916786} 2-BK-F
8	9510663	AR	CONNECTOR, {PP:89510663} 3-BK-F
8	916791	AR	CONNECTOR, WIRE, {PP:80916791} 4-BK-F
9	445522	AR	TERMINAL, {PP:80445522} F 1.5-2.5
9	9513123	AR	TERMINAL, {PP:89513123} F 0.5-1.5
10	80445745	AR	CONNECTOR, WIRE, 3-BF-F
10	9504367	AR	CONNECTOR, {PP:89504367} 7-BK-F
10	9504361	AR	CONNECTOR, WIRE, {PP:89504361} 9-BK-F
10	445516	AR	CONNECTOR, WIRE, {PP:80445516} 16-BK-F
10	9818031	AR	CONNECTOR, WIRE, {PP:89818031} 22-BK-F
10	9504362	AR	CONNECTOR, {PP:89504362} 24-BK-F
10	9814979	AR	CONNECTOR, {PP:89814979} 37-BK-F
11	445519	AR	TERMINAL, {PP:80445519} F 1.5-4
11	445518	AR	TERMINAL, {PP:80445518} F 5-8
12	445525	AR	COLLAR, {PP:80445525} 7 & 16 TO 37 POL.
12	9511904	AR	COLLAR, {PP:89511904} 6 & 9 POL.
12	80445526	AR	COLLAR, 3 POL.
13	9504961	AR	CONNECTOR, {PP:89504961} 4-BK-F
14	84004080	AR	CONNECTOR, WIRE, 4 POL (Incl.term.)
15	84038471	AR	CONNECTOR, WIRE,
16	84038470	AR	TERMINAL, 0.5-1MM2

WWW.SCBMO.BY

06.55(01) TERMINALS AND TERMINAL CONNECTORS

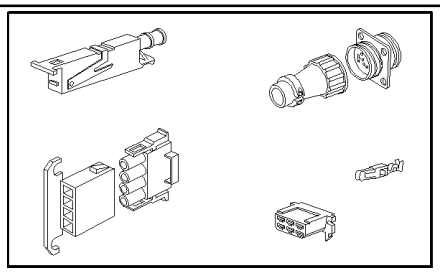

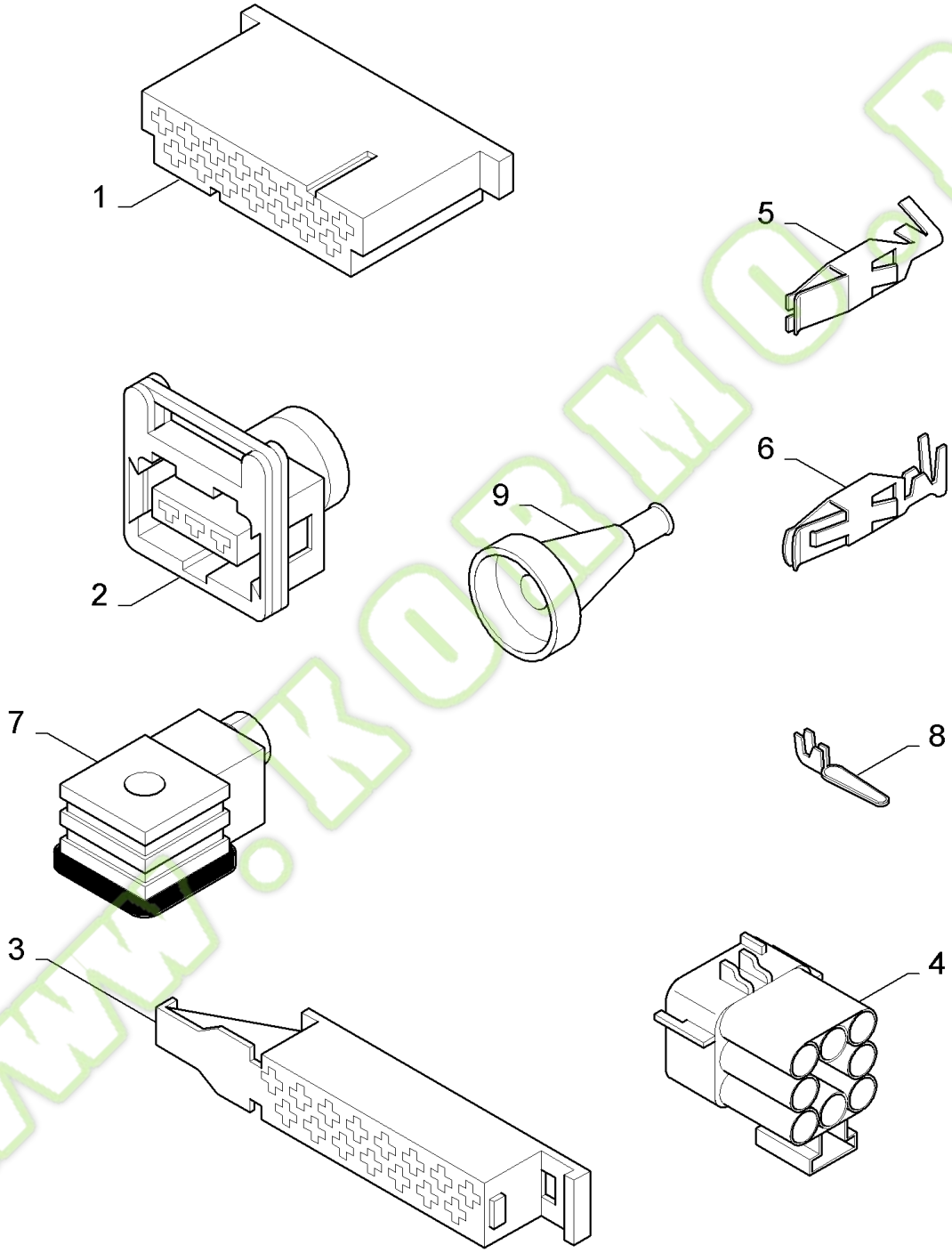

www.KOBMO.BY

FX50 SELF-PROPELLED FORAGE HARVESTER (10/02-)

06.55(01) TERMINALS AND TERMINAL CONNECTORS

Ref	Part Number	Qty	Description
1	9811261	AR	CONNECTOR, {PP:89811261} 15-BK-F
2	84018969	AR	CONNECTOR, 4-BK-F
2	9850554	AR	CONNECTOR, {PP:89850554} 3-BK-F
2	9850555	AR	CONNECTOR, {PP:89850555} 2-BK-F
2	84018967	AR	CONNECTOR, 2-BK-F
2	84018971	AR	CONNECTOR, 8-BK-F
3	9510666	AR	CONNECTOR, WIRE, {PP:89510666} 25-BK
4	84018972	AR	CONNECTOR, 8-BK-M
4	84018970	AR	CONNECTOR, 4-BK-M
4	84018968	AR	CONNECTOR, 2-BK-M
5	9815256	AR	CONNECTOR, {PP:89815256} F 0.5-1.5
6	9813989	AR	TERMINAL, {PP:89813989} F 1-2.5
7	84019407	AR	CONNECTOR, HYD., 4-BK-F
7	84019408	AR	CONNECTOR, HYD., 14-A-H
8	84018981	AR	TERMINAL, M 2.00-3.00
8	84018979	AR	TERMINAL, M 0.5-1.5
9	9850832	AR	COVER, CAP, {PP:89850832} 2 POL
9	89850833	AR	COVER, CAP, 3 POL
9	9850869	AR	COVER, CAP, {PP:89850869} 4 POL

www.KOBMO.BY

06.56(01) CENTRAL LUBRICATION SYSTEM, TERMINALS AND TERMINAL CONNECTORS

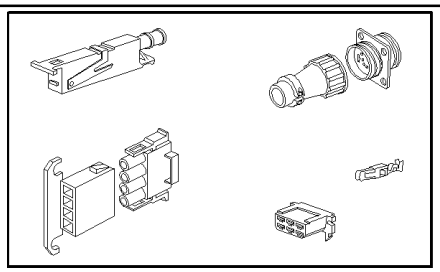

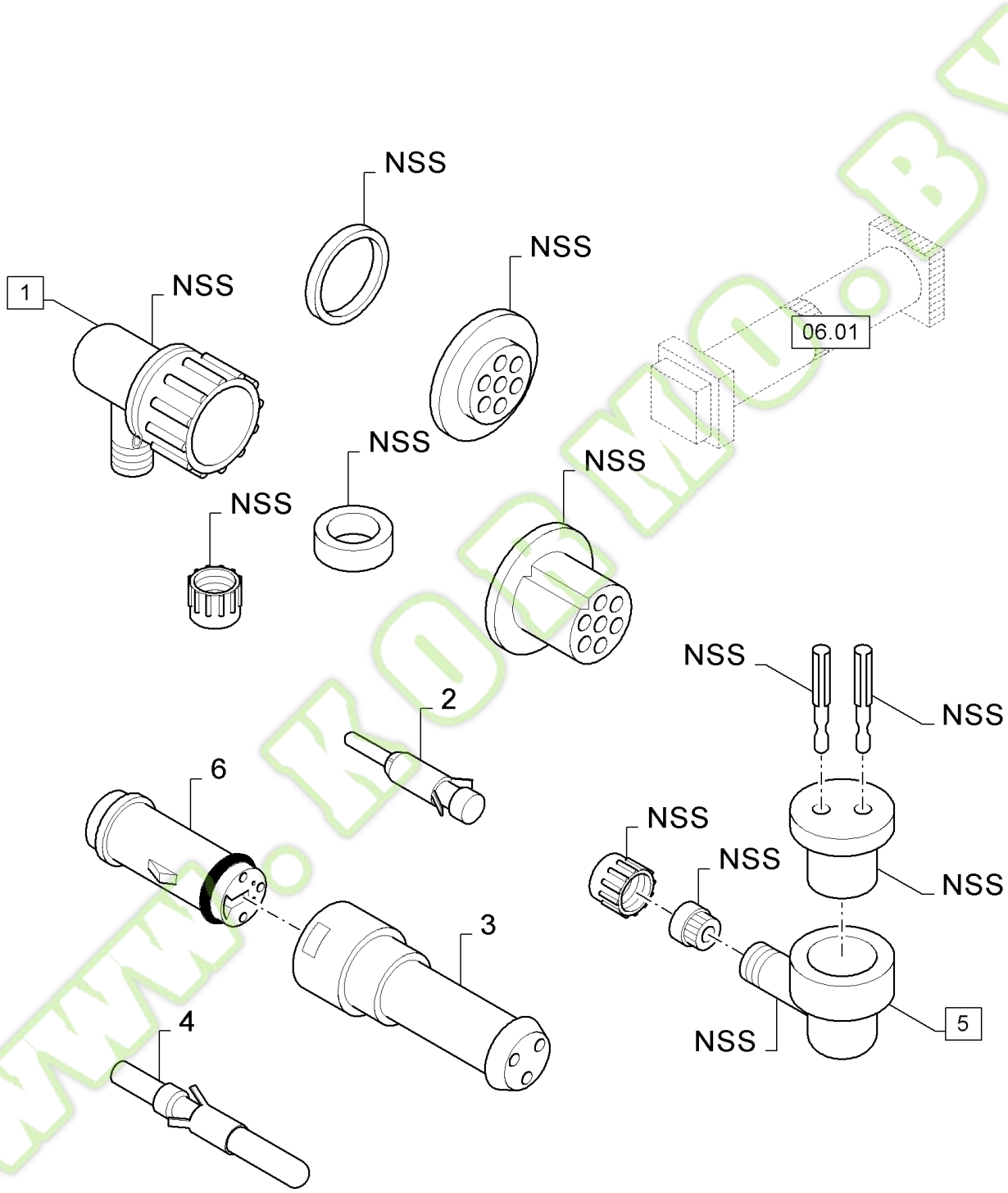

www.KOBMO.BY

06.56(01) CENTRAL LUBRICATION SYSTEM, TERMINALS AND TERMINAL CONNECTORS

Ref	Part Number	Qty	Description
1	84038036	1	CONNECTOR, WIRE, Set 8-Pole (2)
2	9513123	AR	TERMINAL, {PP:89513123} F 0.5-1.5
3	9510663	1	CONNECTOR, {PP:89510663}
4	9516242	1	TERMINAL, {PP:89516242}
5	84038037	1	CONNECTOR, WIRE, Set 2-Pole
6	9510662	AR	CONNECTOR, WIRE, {PP:89510662} 3-BK-M

WWW.KOBMO.BY

HYDRAULIC SYSTEMS **INSTALLATION HYDRAULIQUE** **INSTALACIÓN HIDRÁULICA** **HYDRAULIKANLÆG**

IMPIANTO IDRAULICA **HYDRAULISCHE ANLAGE** **INSTÁLAÇION HIDRÁULICA** **HYDRAULISCH SYSTEEM**

SEC. 7

07.04 - 07.05 - 07.12 - 07.13 - 07.17 - 07.19 - 07.20
07.25 - 07.26 - 07.27 - 07.28 - 07.29 - 07.37

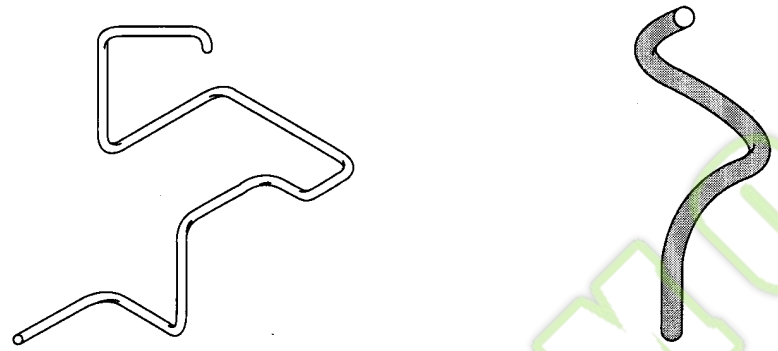

07.01 - 07.02 - 07.03

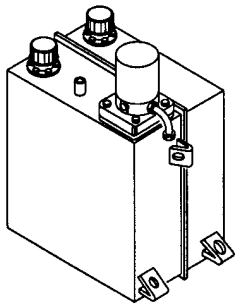

07.06

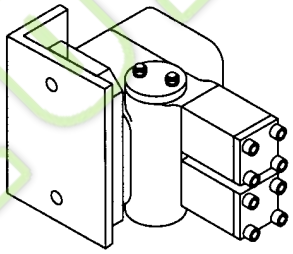

07.07

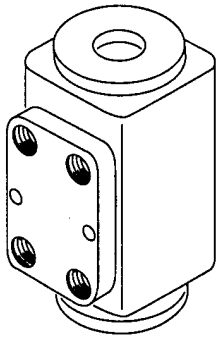

07.08

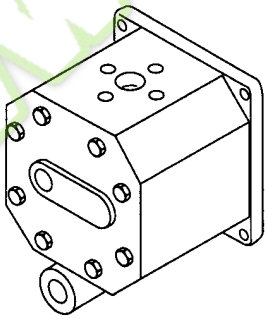

07.13

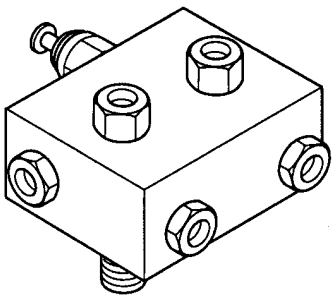

07.09 - 07.10 - 07.11
07.14 - 07.15

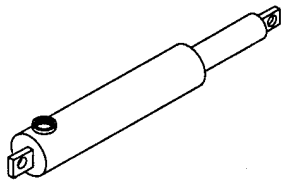

www.KOBMU.BY

Ref	Part Number	Qty	Description

www.KOBMO.BY

HYDRAULIC SYSTEMS **INSTALLATION HYDRAULIQUE** **INSTALACIÓN HIDRÁULICA** **HYDRAULIKANLÆG**

IMPIANTO IDRAULICA **HYDRAULISCHE ANLAGE** **INSTÁLAÇION HIDRÁULICA** **HYDRAULISCH SYSTEEM**

SEC. 7

07.16 - 07.17

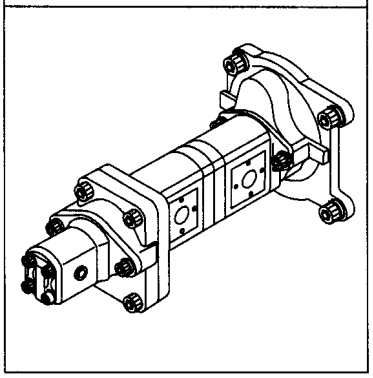

07.18

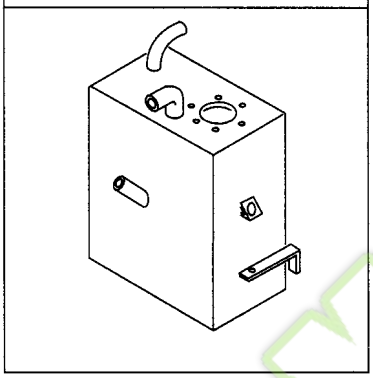

07.19 - 07.20

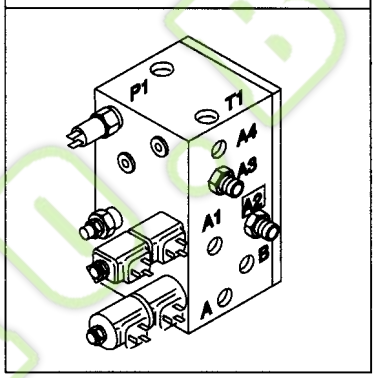

07.21 - 07.22 - 07.23

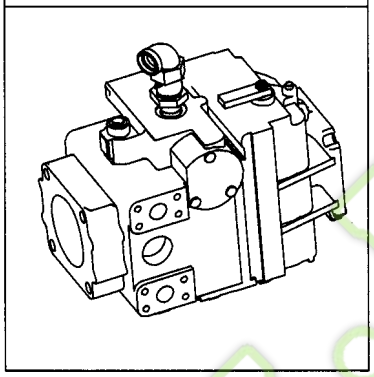

07.24 - 07.24A

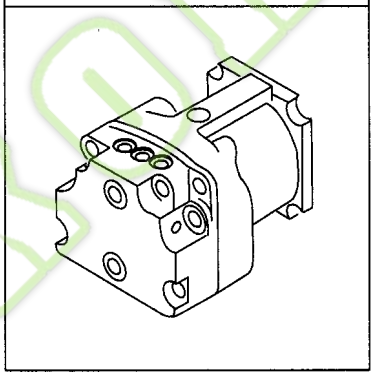

07.30

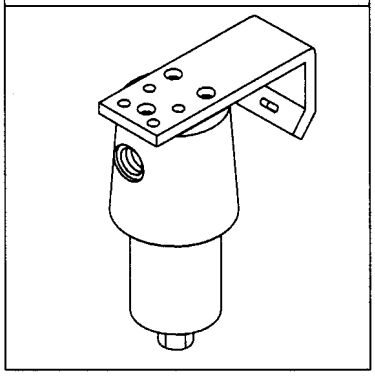

07.31

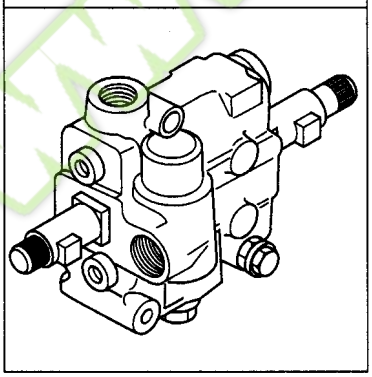

07.32 - 07.33 - 07.34

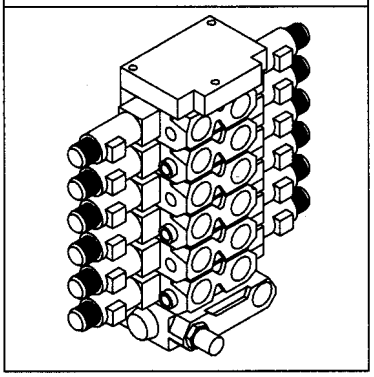

07.35

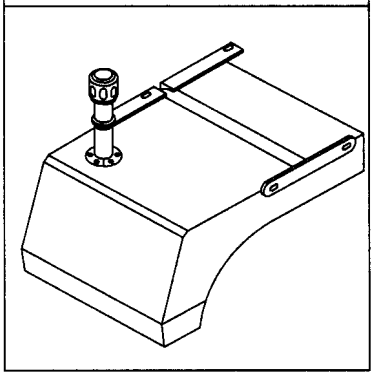

www.tormoby

Ref	Part Number	Qty	Description

www.KORMO.BY

HYDRAULIC SYSTEMS	INSTALLATION HYDRAULIQUE	INSTALACIÓN HIDRÁULICA	HYDRAULIKANLÆG
IMPIANTO IDRAULICA	HYDRAULISCHE ANLAGE	INSTÁLAÇION HIDRÁULICA	HYDRAULISCH SYSTEEM

SEC. 7

07.36 - 07.38 - 07.39

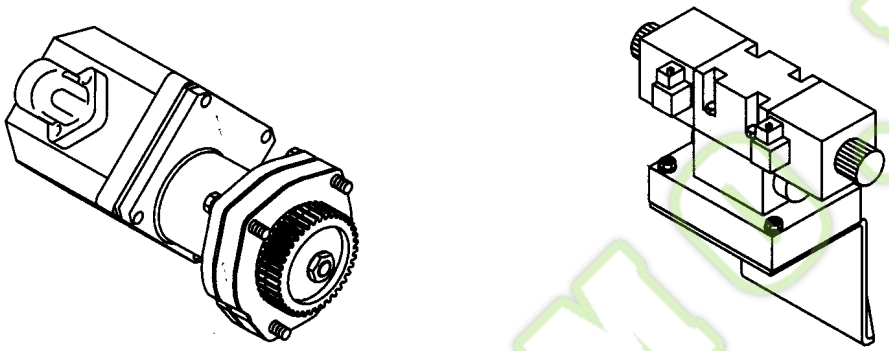

07.40 → 07.44

07.51

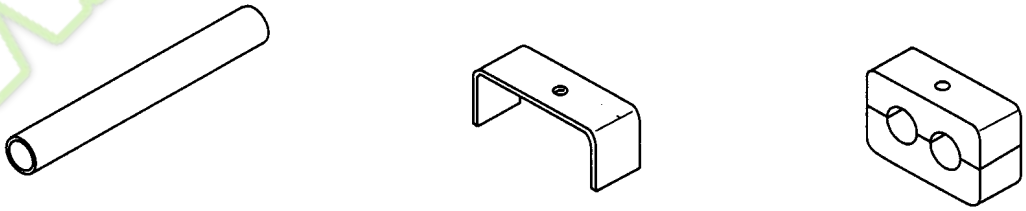

www.KORMOBY

Ref	Part Number	Qty	Description

www.KORMO.BY

07.01(01) HYDRAULIC TANK

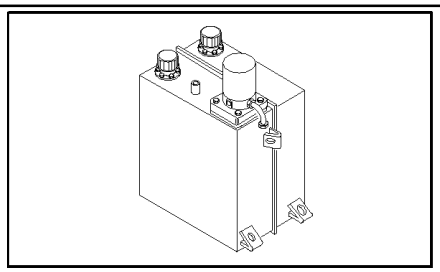

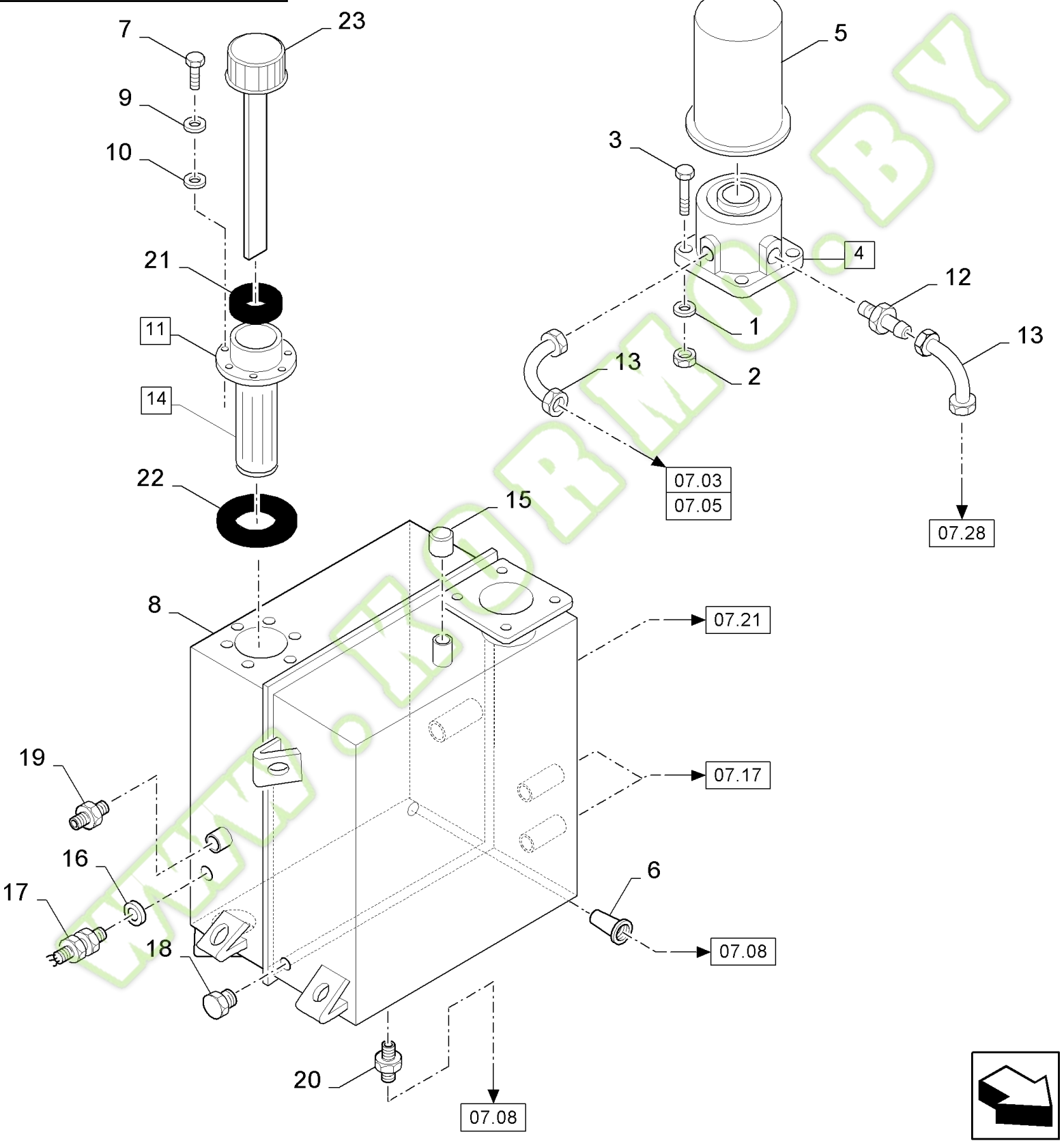

www.TRBMO.BY

FX50 SELF-PROPELLED FORAGE HARVESTER (10/02-)

07.01(01) HYDRAULIC TANK

Ref	Part Number	Qty	Description
1	322358	4	WASHER, LOCK, {PP:80322358} Belleville, M8, 8MM
2	89706690	4	NUT, CL 8, M8 x 1.25 x 13.0
3	43127	4	BOLT, {PP:80043127} Hex, M8 x 25, 8.8, Cap, HH, CL 8.8, M8 x 1.25 x 25
4	9811704	1	FILTER, ENGINE OIL, {PP:89811704} (5)
5	9814477	1	FILTER, ELEMENT, {PP:89814477}
6	9814028	1	NUT, {PP:89814028} M10
7	120098	6	SCREW, {PP:80120098} Hex, M5 x 20, 8.8, Full Thd, M5x20
8	84442813	1	RESERVOIR, HYDRAULIC OIL,
9	322356	6	WASHER, LOCK, {PP:80322356}
10	373817	6	ELEMENT, SEALING, {PP:80373817}
11	9508292	1	FILTER, {PP:89508292} (14, 21 to 23)
12	9501819	1	CONNECTOR, HYD., {PP:89501819}
13	84019177	2	ELBOW,
14	9811443	1	FILTER, ELEMENT, {PP:89811443} (22)
15	9817518	1	BREATHER, {PP:89817518}
16	9511034	1	GASKET, {PP:89511034}
17	84021678	1	SENDER UNIT, ,TEMP.
18	417006	1	PLUG, {PP:80417006}
19	9501819	1	CONNECTOR, HYD., {PP:89501819}
20	84036286	1	CONNECTOR, HYD.,
21	NSS	1	NOT SERVICED SEPARATELY, SEAL
22	NSS	1	NOT SERVICED SEPARATELY, SEAL
23	NSS	1	NOT SERVICED SEPARATELY, COVER

www.KOBMO.BY

07.02(01) HYDRAULIC TANK

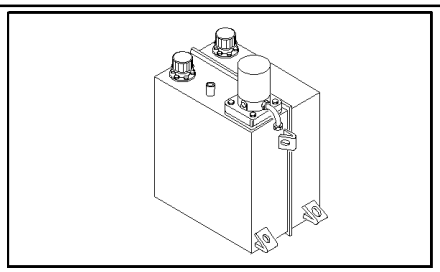

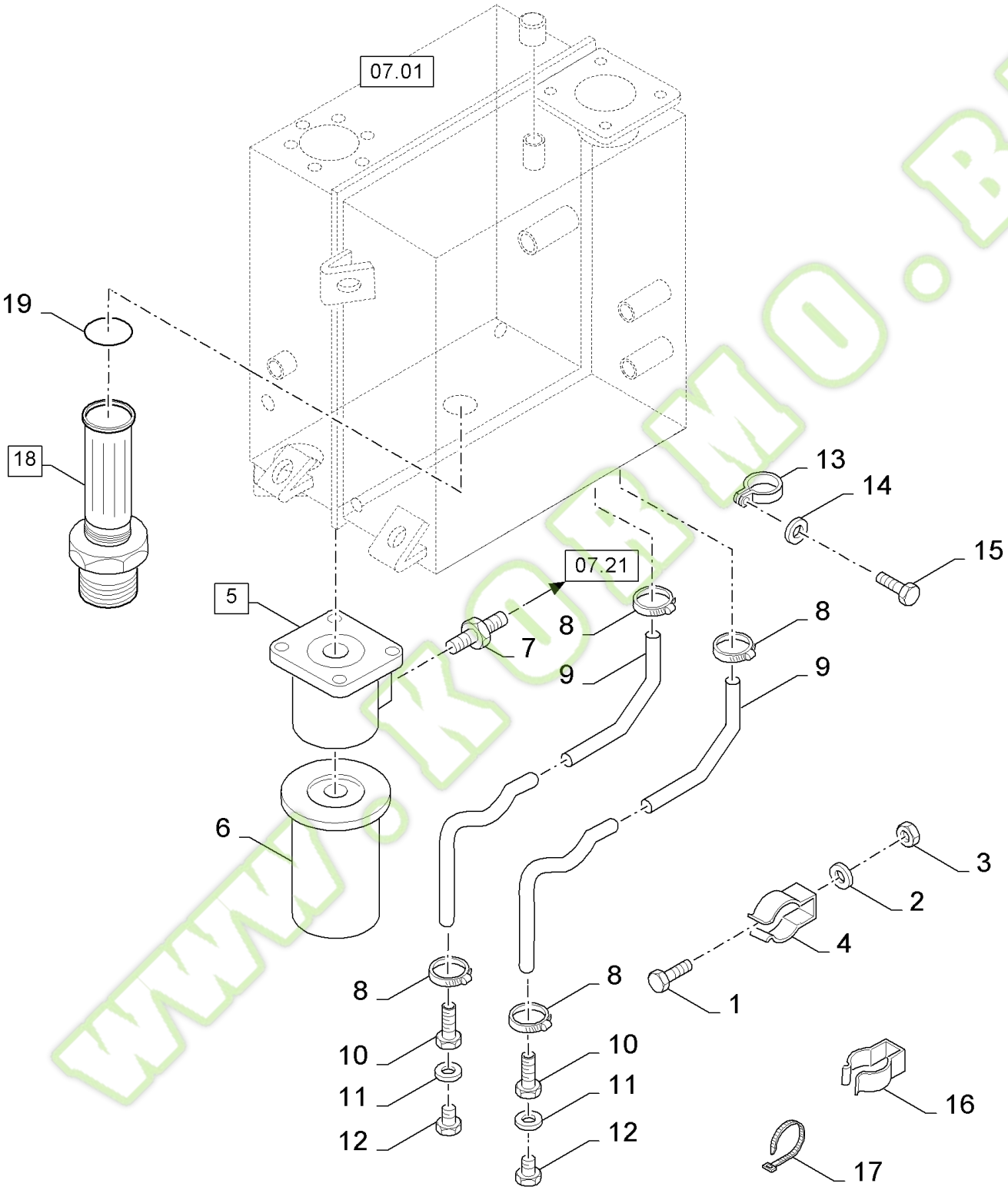

www.KOMO.BY

FX50 SELF-PROPELLED FORAGE HARVESTER (10/02-)

07.02(01) HYDRAULIC TANK

Ref	Part Number	Qty	Description
1	120100	2	BOLT, {PP:80120100} Hex, M6 x 20, 8.8, M6x20
2	322357	4	WASHER, LOCK, {PP:80322357} Belleville, M6, Belleville, M6
3	9824326	2	WASHER, {PP:89824326} M5, M6
4	362627	2	CLIP, {PP:80362627}
5	457411	1	FILTER, ENGINE OIL, {PP:80457411} (6)
6	457412	1	FILTER, ELEMENT, {PP:80457412}
7	9516479	1	CONNECTOR, HYD., {PP:89516479}
8	326082	AR	CLAMP, {PP:80326082}
9	80446648	2	HOSE,
10	80326079	2	CONNECTOR, HYD.,
11	722441	2	GASKET,
12	150060	2	PLUG, {PP:80150060}
13	600427	AR	CLAMP, {PP:80600427}
14	322358	AR	WASHER, LOCK, {PP:80322358} Belleville, M8, 8MM
15	43127	AR	BOLT, {PP:80043127} Hex, M8 x 25, 8.8, Cap, HH, CL 8.8, M8 x 1.25 x 25
16	9511662	2	CLAMP, {PP:89511662}
17	396718	AR	STRAP, {PP:80396718}
18	84100813	1	FILTER, STRAINER,
19	86583917	1	O-RING, Cl 6, 44.6MM ID x 2.9 Thk,

www.KOBMO.BY

07.03(01) HYDRAULIC TANK

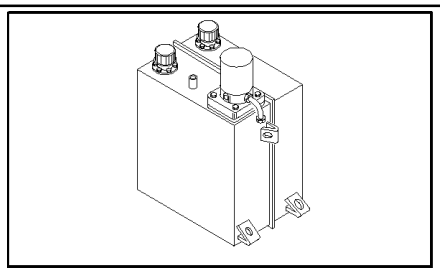

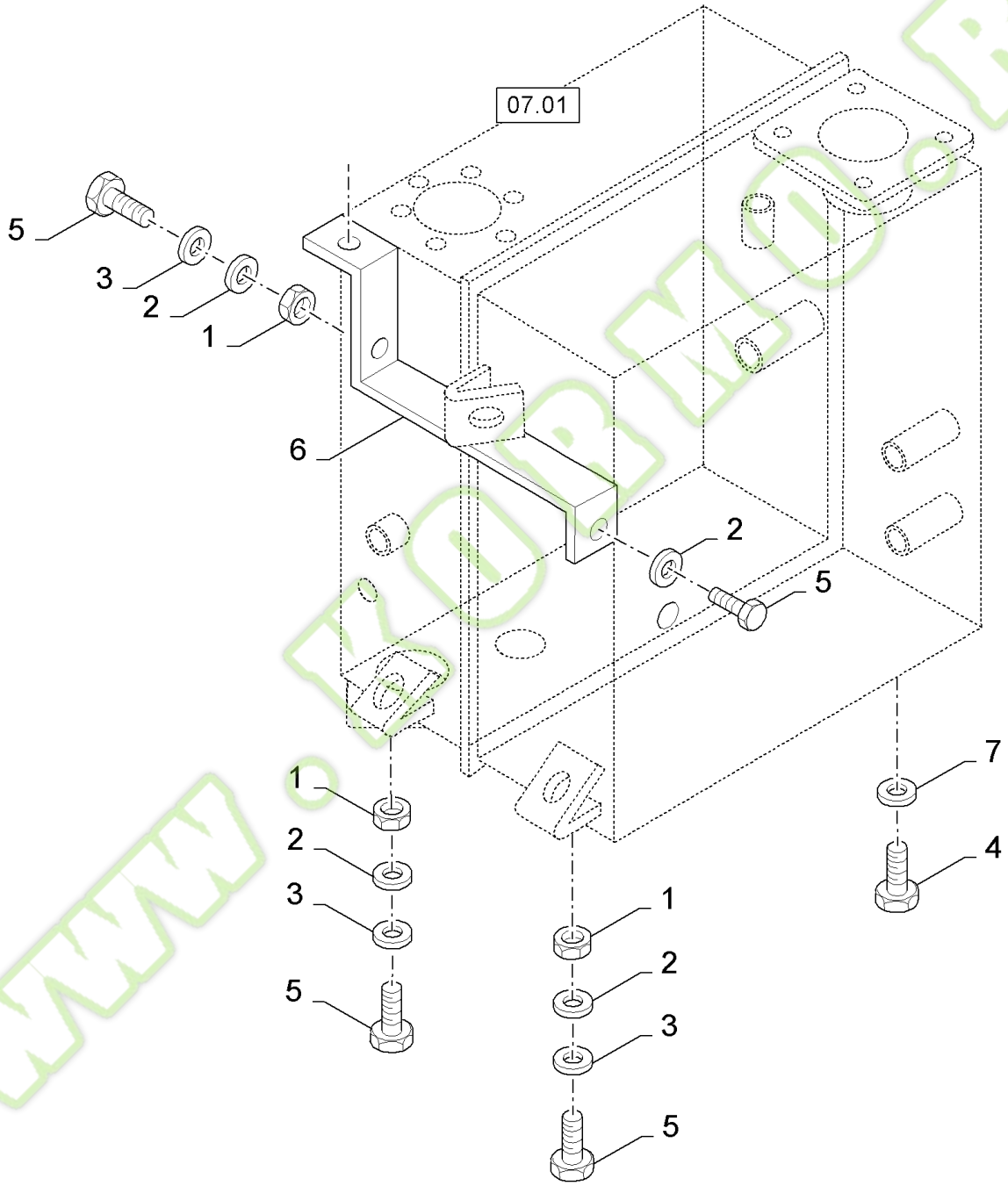

www.KOBMOBY

07.03(01) HYDRAULIC TANK

Ref	Part Number	Qty	Description
1	89706690	4	NUT, CL 8, M8 x 1.25 x 13.0
2	322358	5	WASHER, LOCK, {PP:80322358} Belleville, M8, 8MM
3	140016	4	WASHER, {PP:80140016} M8 x 16 x 1.6, 8MM
4	300442	1	SCREW, {PP:80300442} Hex Soc Hd, M10 x 30, 8.8, M10x30
5	43127	4	BOLT, {PP:80043127} Hex, M8 x 25, 8.8, Cap, HH, CL 8.8, M8 x 1.25 x 25
6	84023231	1	SUPPORT, , BSN C329
6	84454124	1	SUPPORT, , ASN D330
7	140045	1	WASHER, LOCK, {PP:80140045} Belleville, M10, 10MM

WWW.KOBMO.BY

07.04(01) STEERING VALVE

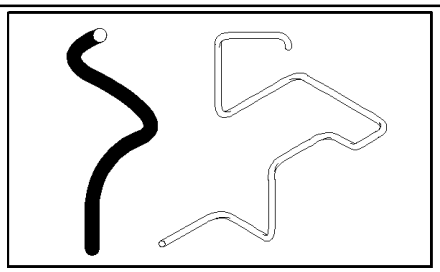

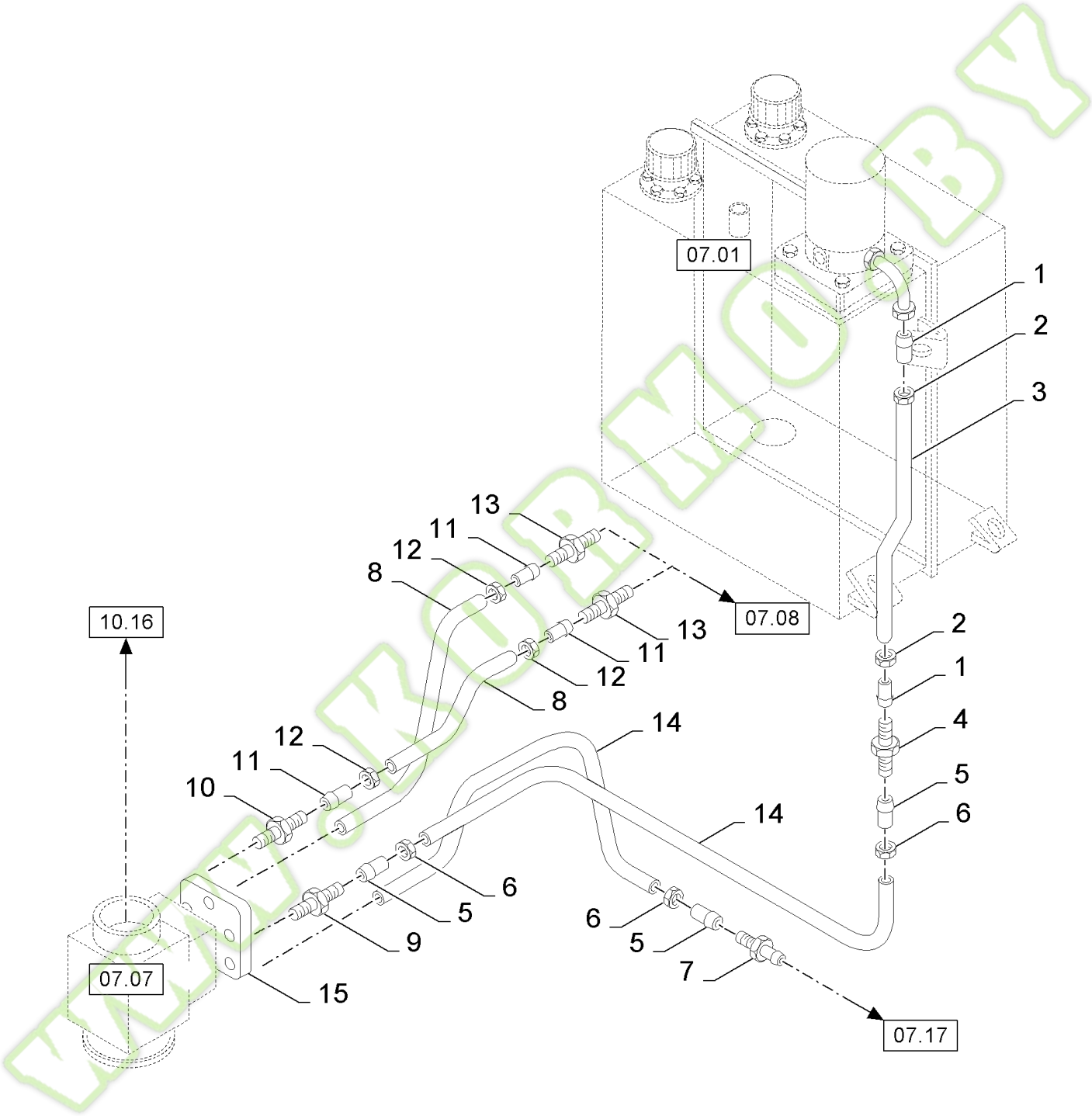

FX50 SELF-PROPELLED FORAGE HARVESTER (10/02-)

07.04(01) STEERING VALVE

Ref	Part Number	Qty	Description
1	335168	2	FERRULE, {PP:80335168}
2	335170	2	NUT, {PP:80335170}
3	371534	AR	TUBE, RIGID, {PP:80371534} D=18
4	458717	1	CONNECTOR, HYD., {PP:80458717}
5	335169	4	FERRULE, {PP:80335169}
6	335171	4	NUT, {PP:80335171}
7	335174	1	CONNECTOR, HYD., {PP:80335174}
8	371539	AR	TUBE, RIGID, {PP:80371539} D=10
9	394372	2	CONNECTOR, HYD., {PP:80394372}
10	395019	2	CONNECTOR, HYD., {PP:80395019}
11	150014	4	FERRULE, {PP:80150014}
12	100042	4	NUT, {PP:80100042}
13	150017	2	CONNECTOR, HYD., {PP:80150017}
14	371536	AR	TUBE, RIGID, {PP:80371536} D=16
15	80750406	1	ADAPTER,

LESS AUTOPILOT

www.KOBMO.BY

07.05(01) STEERING VALVE

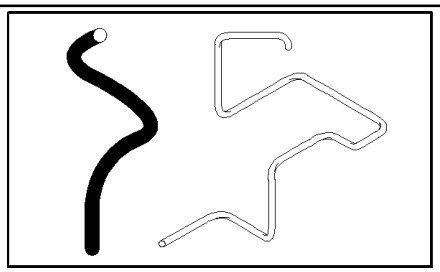

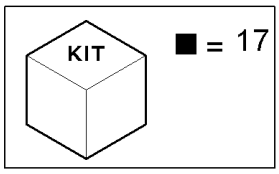

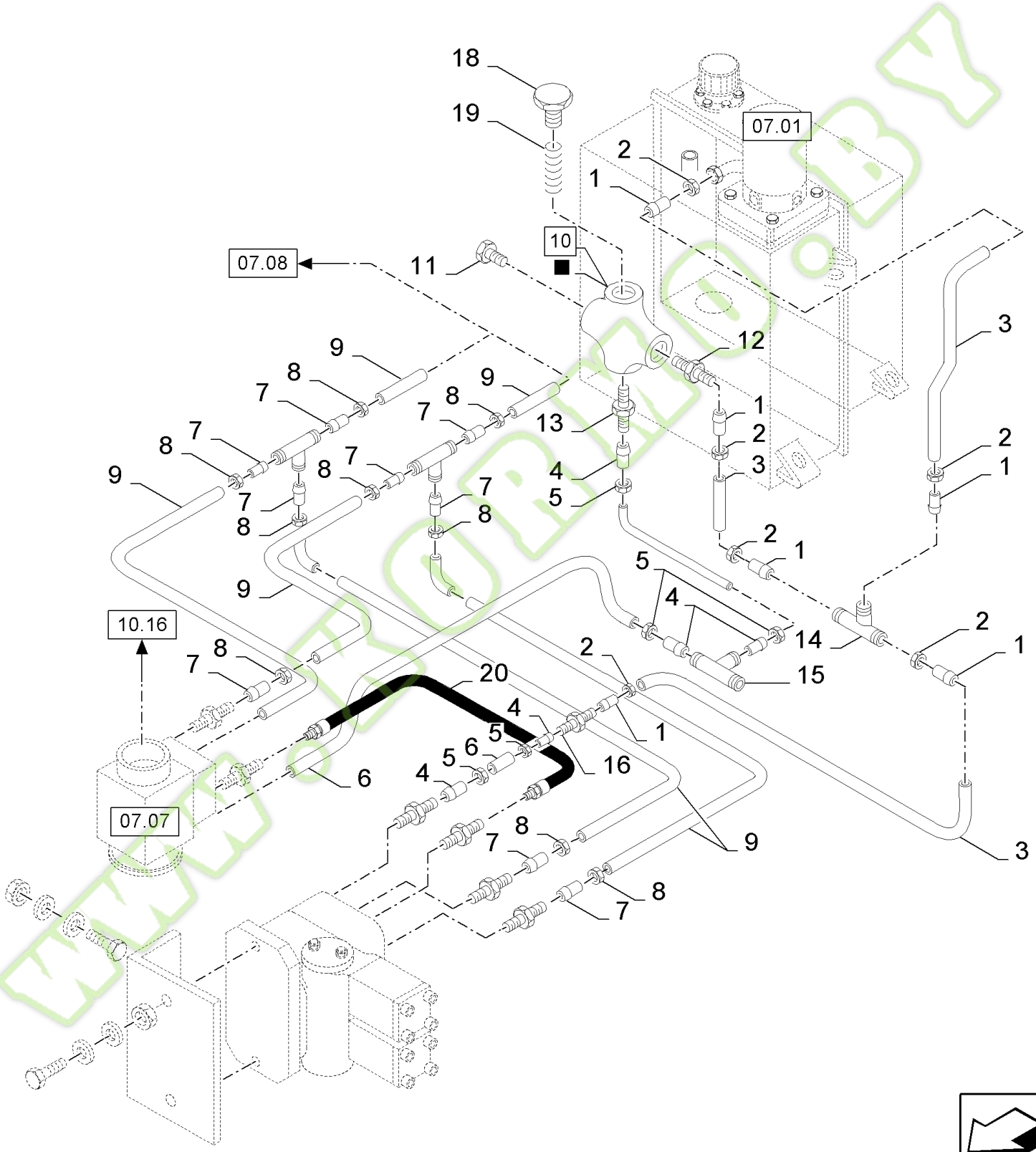

WWW.BOBCATOBY

WITH AUTOPILOT

FX50 SELF-PROPELLED FORAGE HARVESTER (10/02-)

07.05(01) STEERING VALVE

Ref	Part Number	Qty	Description
	84020264	1	DIA KIT, HARVESTER, , AUTOPILOT
1	335168	6	FERRULE, {PP:80335168}
2	335170	6	NUT, {PP:80335170}
3	371534	AR	TUBE, RIGID, {PP:80371534} D=18
4	335169	8	FERRULE, {PP:80335169}
5	335171	8	NUT, {PP:80335171}
6	371536	AR	TUBE, RIGID, {PP:80371536} D=16
7	150014	12	FERRULE, {PP:80150014}
8	100042	12	NUT, {PP:80100042}
9	371539	AR	TUBE, RIGID, {PP:80371539} D=10
10	84017655	1	VALVE, PRESSURE RELIEF, (17 to 19)
11	417006	1	PLUG, {PP:80417006}
12	394373	1	CONNECTOR, HYD., {PP:80394373}
13	394372	1	CONNECTOR, HYD., {PP:80394372}
14	379431	1	CONNECTION, 3 WAY, {PP:80379431}
15	444325	1	CONNECTION, 3 WAY, {PP:80444325}
16	458717	1	CONNECTOR, HYD., {PP:80458717}
17	84011927	1	KIT, SEALS,
18	417006	1	PLUG, {PP:80417006}
19	9813875	1	SPRING, {PP:89813875}
20	89815904	1	HOSE, FLEXIBLE,

WWW.KOBMO.BY

WITH AUTOPILOT

07.06(01) STEERING VALVE

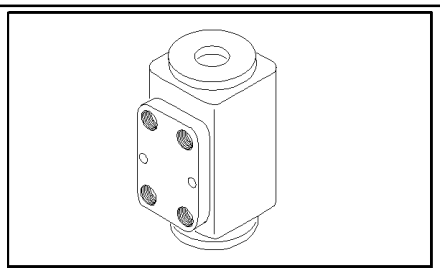

07.01

07.08

1

1

2

2

10.16

3

4

6

07.07

10

11

12

13

7

10

11

14

8

9

FX50 SELF-PROPELLED FORAGE HARVESTER (10/02-)

07.06(01) STEERING VALVE

Ref	Part Number	Qty	Description
	84020264	1	DIA KIT, HARVESTER, , AUTOPILOT
1	395472	2	CONNECTION, 3 WAY, {PP:80395472}
2	418284	2	ELBOW, {PP:80418284}
3	80162888	2	CONNECTOR, HYD.,
4	9513143	2	CONNECTOR, HYD., {PP:89513143}
6	9850809	2	CONNECTOR, HYD., {PP:89850809}
7	9813512	2	CONNECTOR, HYD., {PP:89813512}
8	84019472	1	ELECTROMAGNET,
9	89835245	1	SUPPORT,
10	89706690	4	NUT, CL 8, M8 x 1.25 x 13.0
11	322358	4	WASHER, LOCK, {PP:80322358} Belleville, M8, 8MM
12	378243	2	WASHER, {PP:80378243} 8MM
13	80120104	2	SCREW, M8x20
14	120106	2	SCREW, {PP:80120106} Hex, M8 x 40, 8.8, Full Thd, Hex, M8 x 40, 8.8, Full Thd

www.KOBMO.BY

WITH AUTOPILOT

07.07(01) STEERING VALVE

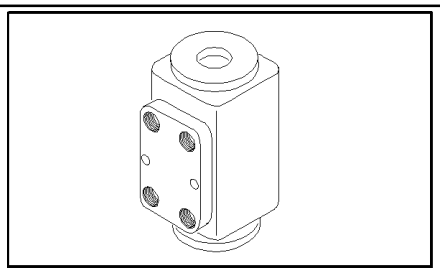

KIT
DIA
DIA

KIT
■ = 5
● = 20

1
3
2
4
■
6
8
7
9
NSS
NSS
10
18
19
12
11
12
14
13
15
14
16
17

www.KOBMO.BY

FX50 SELF-PROPELLED FORAGE HARVESTER (10/02-)

07.07(01) STEERING VALVE

Ref	Part Number	Qty	Description
	84020264	1	DIA KIT, HARVESTER, , AUTOPILOT
	383941	1	VALVE, HYDRAULIC, {PP:80383941} (1 to 20), WITH AUTOPILOT, BSN C265
	84439729	1	VALVE, HYDRAULIC, , WITH AUTOPILOT, NO SUB-PARTS AVAILABLE YET, ASN D266
	9512589	1	VALVE, HYDRAULIC, {PP:89512589} (1 to 20), WITHOUT AUTOPILOT, BSN C265
	84989588	1	VALVE, HYDRAULIC, , WITH AUTOPILOT, NO SUB-PARTS AVAILABLE YET, ASN D266
1	394855	1	RING, {PP:80394855}
2	327232	1	O-RING, {PP:80327232}
3	326447	1	BALL, {PP:80326447}
4	326446	1	SCREW, {PP:80326446}
5	418312	1	KIT, SEALS, {PP:80418312}
6	449242	1	SET OF RINGS, {PP:80449242} , WITHOUT AUTOPILOT
6	751022	1	BEARING, THRUST, {PP:80751022} , WITH AUTOPILOT
7	326432	1	RING, {PP:80326432}
8	433273	6	SPRING, {PP:80433273}
9	394849	1	PIN, {PP:80394849}
10	326436	1	PLATE, COVER, {PP:80326436}
11	89512593	1	KIT,
12	326440	2	O-RING, {PP:80326440}
13	326441	1	COVER, {PP:80326441}
14	326442	7	WASHER, {PP:80326442}
15	326443	6	SCREW, {PP:80326443} Hex, M8 x 1 x 40, 10.9,
16	326444	1	PIN, {PP:80326444}
17	326445	1	SCREW, {PP:80326445}
18	449241	1	SHAFT, {PP:80449241}
19	89512594	1	SPACER,
20	84053469	1	KIT, SEALS, (1,2,5,12,14)

www.KOBMO.BY

07.08(01) HYDRAULIC MOTOR, CUTTERHEAD REVERSE DRIVE

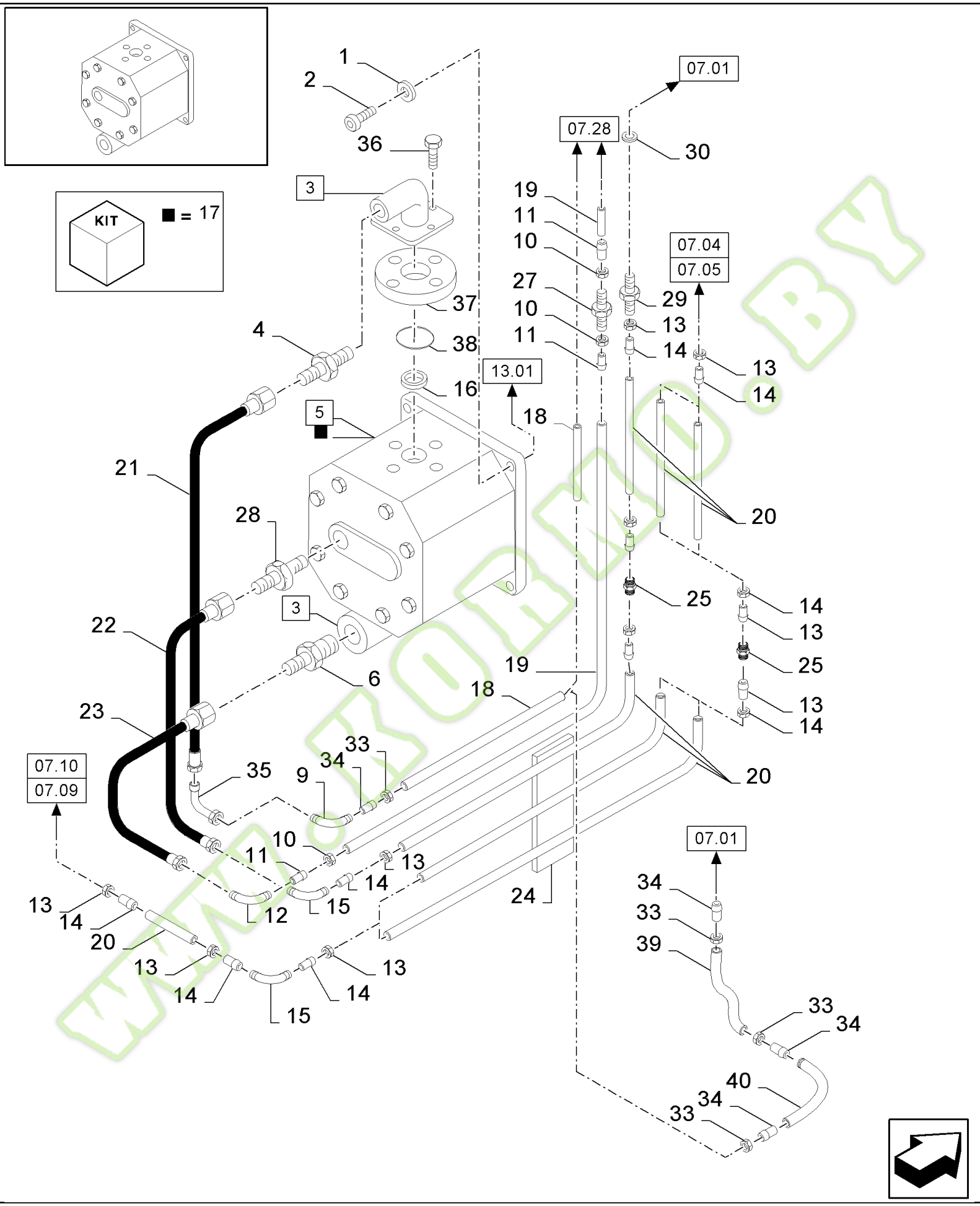

FX50 SELF-PROPELLED FORAGE HARVESTER (10/02-)

07.08(01) HYDRAULIC MOTOR, CUTTERHEAD REVERSE DRIVE

Ref	Part Number	Qty	Description
1	80681	4	WASHER, LOCK, {PP:80080681} 5/16", 5/16"
2	412479	4	SCREW, {PP:80412479} Hex, M8 x 35, 8.8, M8x35
3	89813318	2	CONNECTOR, HYD., (16)
4	84036286	1	CONNECTOR, HYD.,
5	84043509	1	MOTOR, HYDRAULIC, (17)
6	89814768	1	CONNECTOR, HYD.,
7	335170	AR	NUT, {PP:80335170}
8	335168	AR	FERRULE, {PP:80335168}
9	84431356	1	CONNECTOR, HYD.,
10	335171	4	NUT, {PP:80335171}
11	335169	4	FERRULE, {PP:80335169}
12	84014047	1	ELBOW, 16MM
13	100042	16	NUT, {PP:80100042} M10
14	150014	16	FERRULE, {PP:80150014} 10MM
15	84007700	3	ELBOW, 10MM
16	84814915	1	GASKET,
17	84022558	1	KIT, SEALS,
18	9811333	AR	TUBE, RIGID, {PP:89811333} D=28
19	371536	AR	TUBE, RIGID, {PP:80371536} D=16
20	371539	AR	TUBE, RIGID, {PP:80371539} D=10
21	84989754	1	HOSE, FLEXIBLE,
22	84017635	1	HOSE, FLEXIBLE,
23	89815904	2	HOSE, FLEXIBLE,
24	434097	1	BRACKET, {PP:80434097}
25	150017	3	CONNECTOR, HYD., {PP:80150017}
27	335174	1	CONNECTOR, HYD., {PP:80335174}
28	420522	1	CONNECTOR, HYD., {PP:80420522}
29	84021159	1	CONNECTOR, HYD.,
30	9832305	1	RING, {PP:89832305}
32	395472	1	CONNECTION, 3 WAY, {PP:80395472}
33	412527	AR	NUT, {PP:80412527} M28
34	412528	AR	FERRULE, {PP:80412528} 28MM
35	457573	1	ELBOW, {PP:80457573}
36	84000811	3	SCREW, M8x35
37	84989886	1	FLANGE,
38	84022706	1	O-RING,
39	9811333	AR	TUBE, RIGID, {PP:89811333}
40	84004868	1	CONNECTOR, HYD.,

WWW.SOBMO.BY

07.09(01) STEERING CYLINDER, 4- WHEEL DRIVE

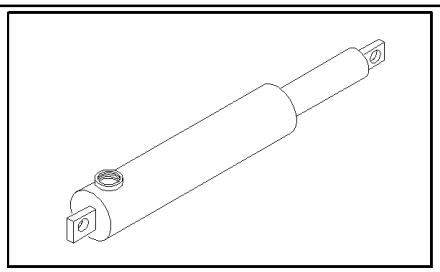

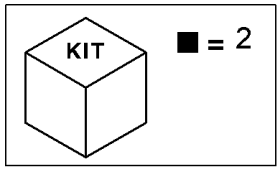

07.08

9

9

8

6

7

8

4

10

5

7

1

05.06

■

10

3

4

5

05.05

www.KOBMO.BY

FX50 SELF-PROPELLED FORAGE HARVESTER (10/02-)

07.09(01) STEERING CYLINDER, 4- WHEEL DRIVE

Ref	Part Number	Qty	Description
1	84607582	1	ACTUATOR, (2)
2	84018470	1	KIT, REPAIR,
3	84607586	1	BALL JOINT, (4,5)
4	80398276	2	NUT, M24x1.5
5	300595	2	PIN, SPLIT (COTTER), {PP:80300595} M4 x 40,
6	84607584	1	BALL JOINT, (4,5)
7	395019	2	CONNECTOR, HYD., {PP:80395019}
8	418284	2	ELBOW, {PP:80418284}
9	338009	2	HOSE, {PP:80338009}
10	100033	2	NUT, {PP:80100033} Thin, M24 x 1.5, Cl 04,

www.KOBMO.BY

07.10(01) STEERING CYLINDERS, 2- WHEEL DRIVE

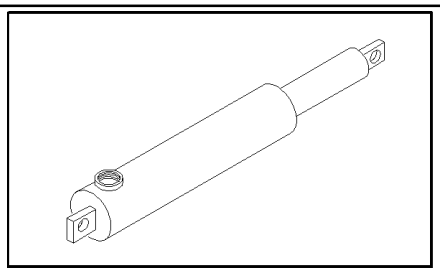

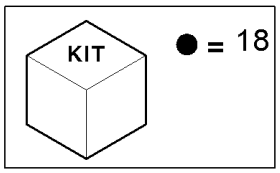

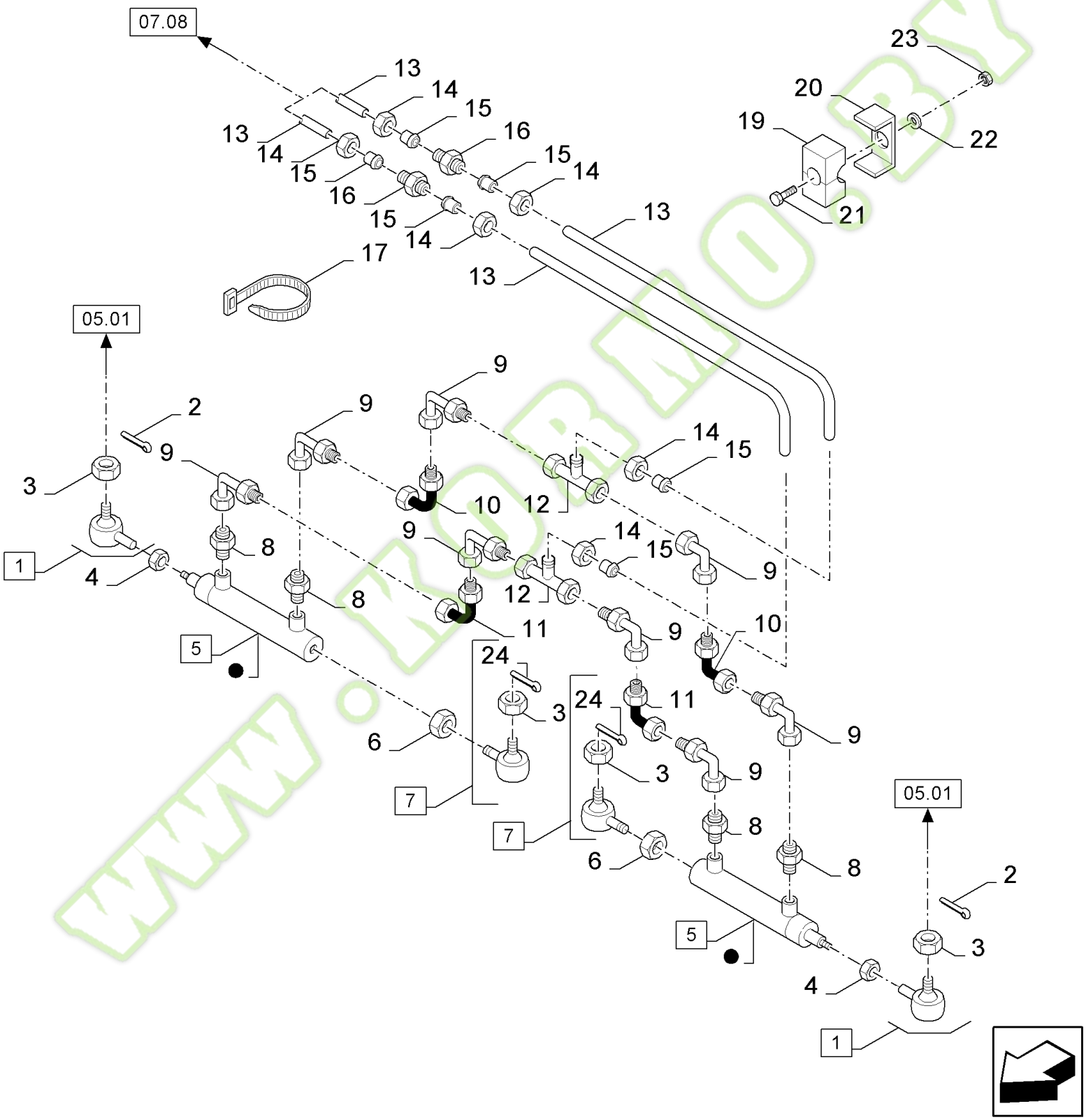

FOR 2-WHEEL DRIVE ONLY

FX50 SELF-PROPELLED FORAGE HARVESTER (10/02-)

07.10(01) STEERING CYLINDERS, 2- WHEEL DRIVE

Ref	Part Number	Qty	Description
1	84039559	2	BALL JOINT, (2,3)
2	300595	2	PIN, SPLIT (COTTER), {PP:80300595} M4 x 40,
3	412103	2	NUT, {PP:80412103} M18
4	320771	2	NUT, {PP:80320771} Thin, M20 x 1.5, Cl 04, M20
5	84444432	2	HYDRAULIC CYLINDER, (18)
6	331209	2	NUT, {PP:80331209} 13/16"-16, G2, 13/16"
7	84444425	2	BALL JOINT, (2,24)
8	395019	4	CONNECTOR, HYD., {PP:80395019}
9	418284	8	ELBOW, {PP:80418284}
10	734029	2	HOSE, FLEXIBLE, {PP:80734029}
10	84037312	2	HOSE, FLEXIBLE, , FOR NA ONLY
11	84036881	2	HOSE, FLEXIBLE,
11	916188	2	HOSE, FLEXIBLE, {PP:80916188} , FOR NA ONLY
12	734031	2	CONNECTOR, HYD., {PP:80734031}
13	371539	AR	TUBE, RIGID, {PP:80371539} D=10
14	86548975	4	NUT, M10
15	150014	4	FERRULE, {PP:80150014}
16	150017	2	CONNECTOR, HYD., {PP:80150017}
17	323597	4	STRAP, {PP:80323597} , FOR NA ONLY
18	84037236	2	KIT, SEALS,
19	433008	2	CLAMP, {PP:80433008}
20	433101	1	SUPPORT, {PP:80433101}
21	300508	1	SCREW, {PP:80300508} Hex, M6 x 45, 8.8, M6x45
22	140015	1	WASHER, {PP:80140015} 6MM
23	353308	1	NUT, {PP:80353308} M6 x 1, Cl 8, M6
24	412685	2	PIN, SPLIT (COTTER), {PP:80412685} M4 x 32,

FOR 2-WHEEL DRIVE ONLY

www.KUBMO.BY

07.11(01) HYDRAULIC PARTS FOR CUTTERHEAD

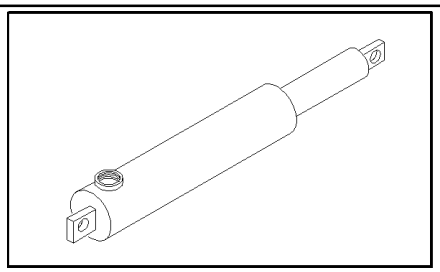

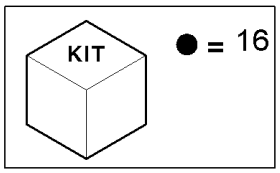

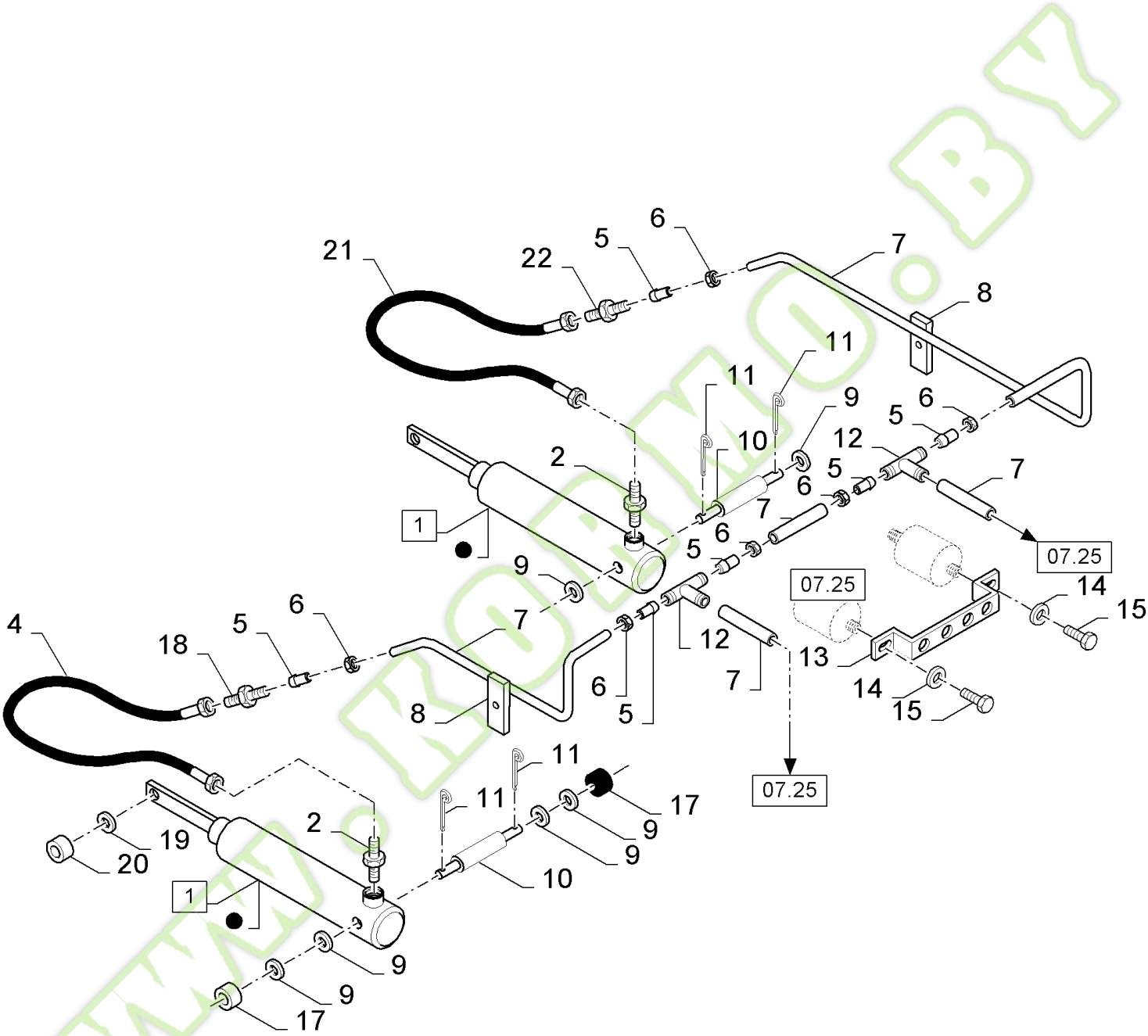

FX50 SELF-PROPELLED FORAGE HARVESTER (10/02-)

07.11(01) HYDRAULIC PARTS FOR CUTTERHEAD

Ref	Part Number	Qty	Description
1	89808733	2	HYDRAULIC CYLINDER, (16), FOR FX30-40 ONLY
1	84042243	2	HYDRAULIC CYLINDER, (16), FOR FX50-60 ONLY
2	395782	2	CONNECTOR, HYD., {PP:80395782}
4	84431474	2	HOSE, FLEXIBLE,
5	150015	6	FERRULE, {PP:80150015}
6	100043	6	NUT, {PP:80100043} M12
7	9513719	AR	TUBE, RIGID, {PP:89513719} D=12
8	84000889	2	BRACKET,
9	140022	AR	WASHER, {PP:80140022} M24 x 44 x 4, 26MM
10	89812447	2	PIN,
11	89515820	4	PIN, SPLIT (COTTER),
12	150019	2	CONNECTION, 3 WAY, {PP:80150019}
13	84014005	1	SUPPORT,
14	140045	2	WASHER, LOCK, {PP:80140045} Belleville, M10,
15	43140	2	BOLT, {PP:80043140} Hex, M10 x 30, 8.8, M10x30
16	84022130	2	KIT, REPAIR, , FOR FX30-40 ONLY
16	84042503	2	KIT, REPAIR, , FOR FX50-60 ONLY
17	84435505	2	RING, 26MM, THK.:14MM, FOR NA ONLY
18	150018	1	CONNECTOR, HYD., {PP:80150018}
19	140022	2	WASHER, {PP:80140022} M24 x 44 x 4, 26MM
20	84435505	2	RING,
21	84431474	1	HOSE, FLEXIBLE, , BSN C322
21	84455379	1	HOSE, FLEXIBLE, , ASN D323
22	150018	1	CONNECTOR, HYD., {PP:80150018} , BSN C322

www.KOBMO.BY

07.12(01) HYDRAULIC LINES, SPOUT AND FRONT HYDRAULIC LINES

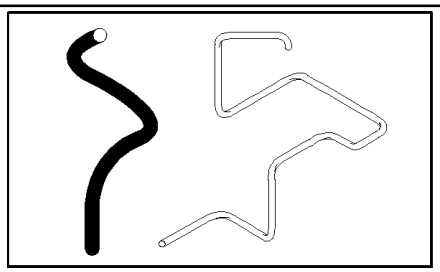

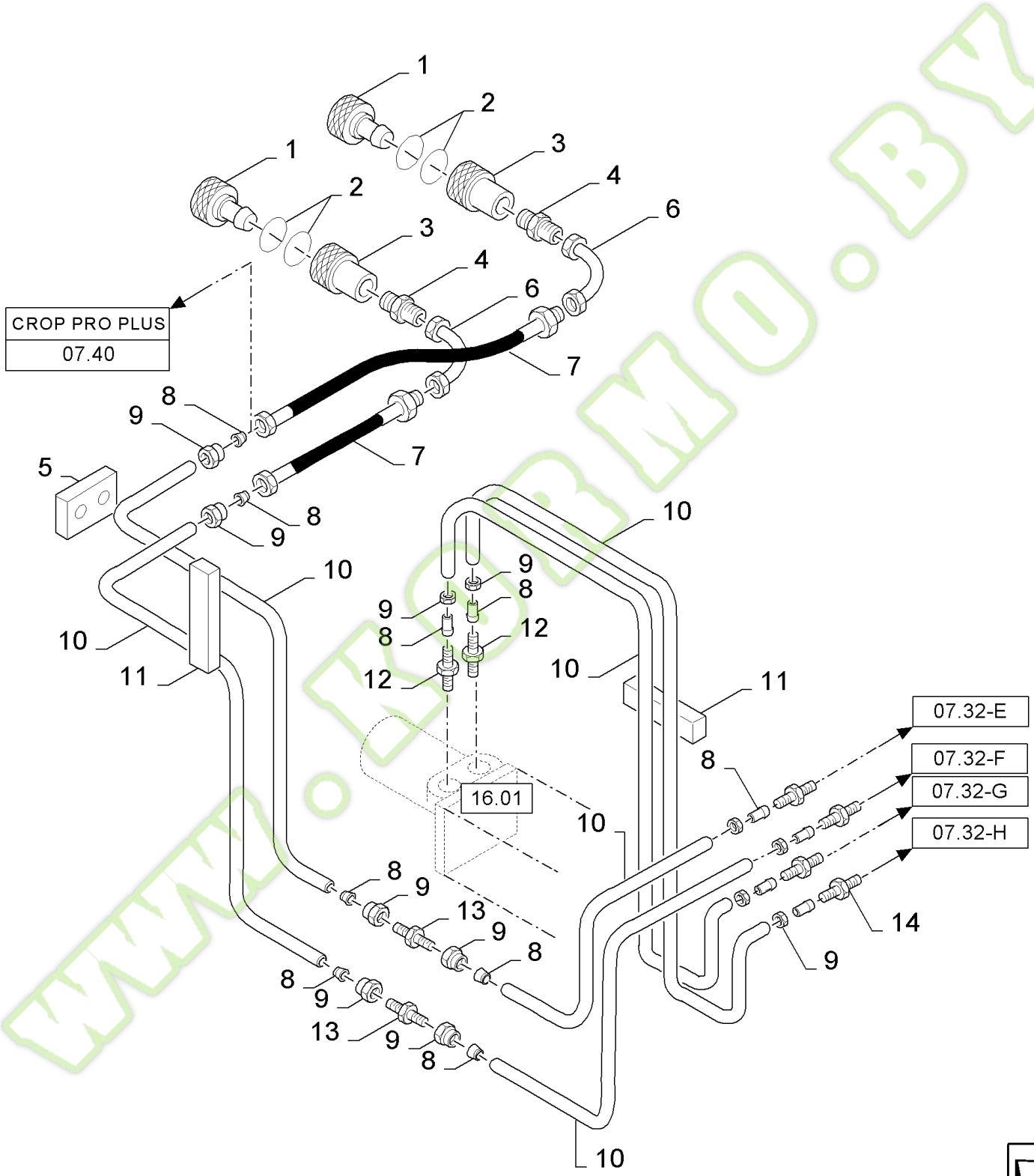

www.KOBMO.BY

FX50 SELF-PROPELLED FORAGE HARVESTER (10/02-)

07.12(01) HYDRAULIC LINES, SPOUT AND FRONT HYDRAULIC LINES

Ref	Part Number	Qty	Description
1	266220	2	DUST CAP, {PP:80266220}
2	370006	4	CIRCLIP, {PP:80370006}
3	84019138	2	COUPLING, QUICK, MALE,
4	84021013	2	CONNECTOR, HYD.,
5	84022011	1	BRACKET,
6	9508529	2	ELBOW, {PP:89508529}
7	160164	2	HOSE, {PP:80160164}
8	150015	12	FERRULE, {PP:80150015}
9	86548976	12	NUT, M12
10	9513719	AR	TUBE, RIGID, {PP:89513719} D=12
11	434097	2	BRACKET, {PP:80434097}
12	80360872	2	CONNECTOR, HYD.,
13	150018	2	CONNECTOR, HYD., {PP:80150018}
14	395782	4	CONNECTOR, HYD., {PP:80395782}

www.KOBMO.BY

07.14(01) CYLINDER FOR SPOUT

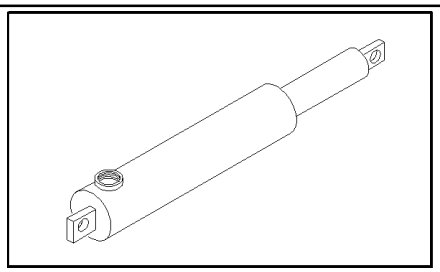

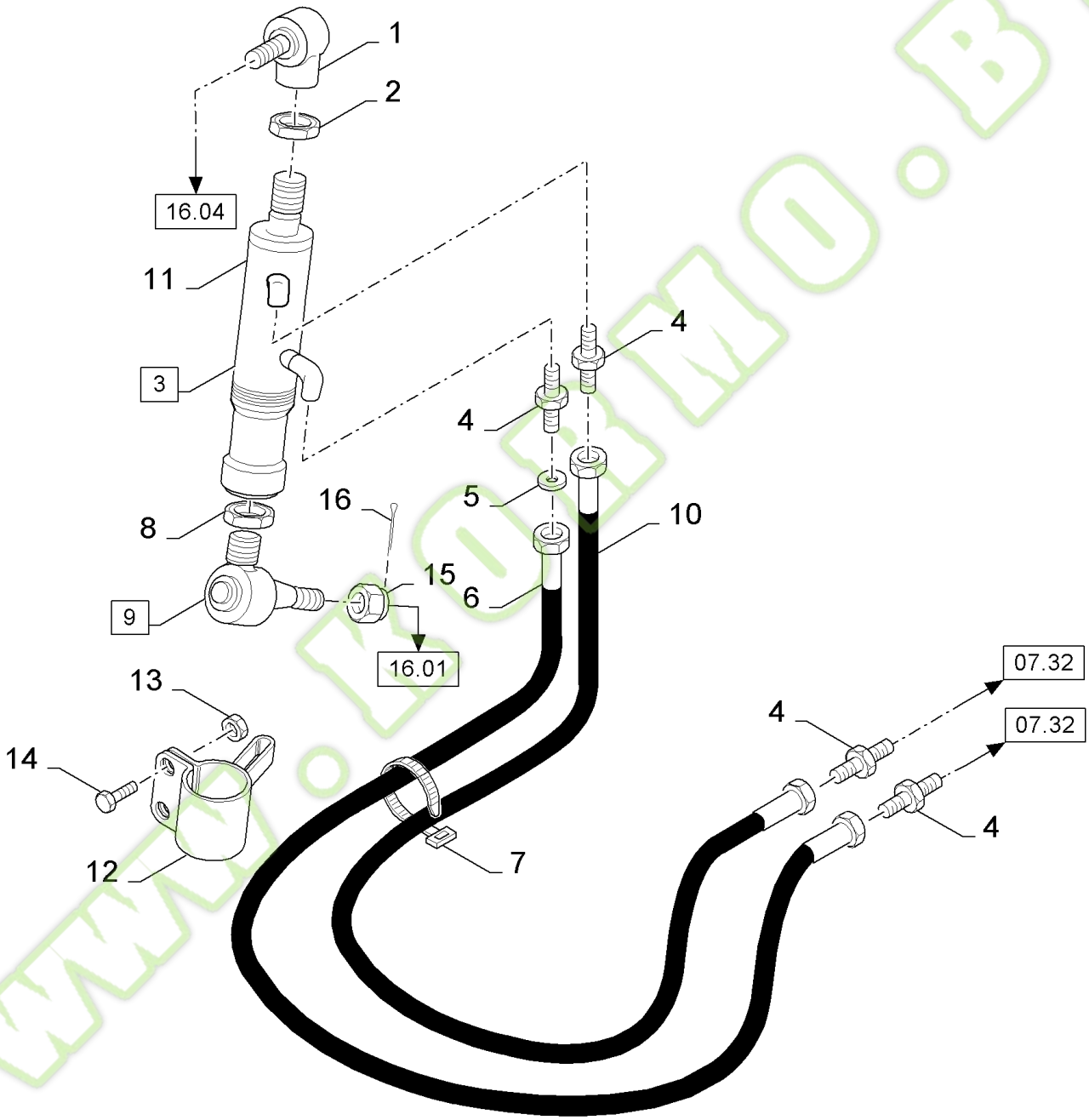

www.KOBMO.BY

FX50 SELF-PROPELLED FORAGE HARVESTER (10/02-)

07.14(01) CYLINDER FOR SPOUT

Ref	Part Number	Qty	Description
1	84039559	1	BALL JOINT,
2	100085	1	NUT, {PP:80100085} M20 x 1.5, Cl 8, M20x1.5
3	84807953	1	HYDRAULIC CYLINDER, (11)
4	386215	4	CONNECTOR, HYD., {PP:80386215}
5	365947	1	ORIFICE, {PP:80365947}
6	84031279	1	HOSE, FLEXIBLE,
7	396718	AR	STRAP, {PP:80396718}
8	300852	1	NUT, {PP:80300852} M30 x 1.5, Cl 8, M30x1.5
9	84053458	1	BALL JOINT, (15,16)
10	84447344	1	HOSE, FLEXIBLE, L=750
11	84042304	1	KIT, REPAIR,
12	84031311	1	CLAMP,
12	84053048	1	CLAMP, , FOR NA ONLY
13	100067	1	NUT, {PP:80100067} M8 x 1.25", Cl 8, M8
14	412479	1	SCREW, {PP:80412479} Hex, M8 x 35, 8.8, M8x35
15	412144	1	SLOTTED NUT, {PP:80412144} M20 x 1.5, Cl 8, M20x1.5
16	300595	1	PIN, SPLIT (COTTER), {PP:80300595} M4 x 40,

WWW.KOBMO.BY

07.15(01) CYLINDER FOR SPOUT DEFLECTORS

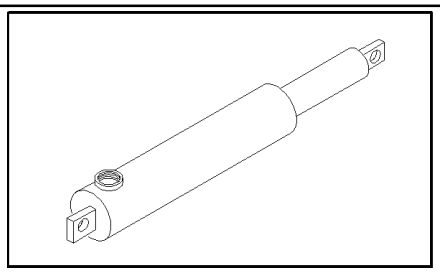

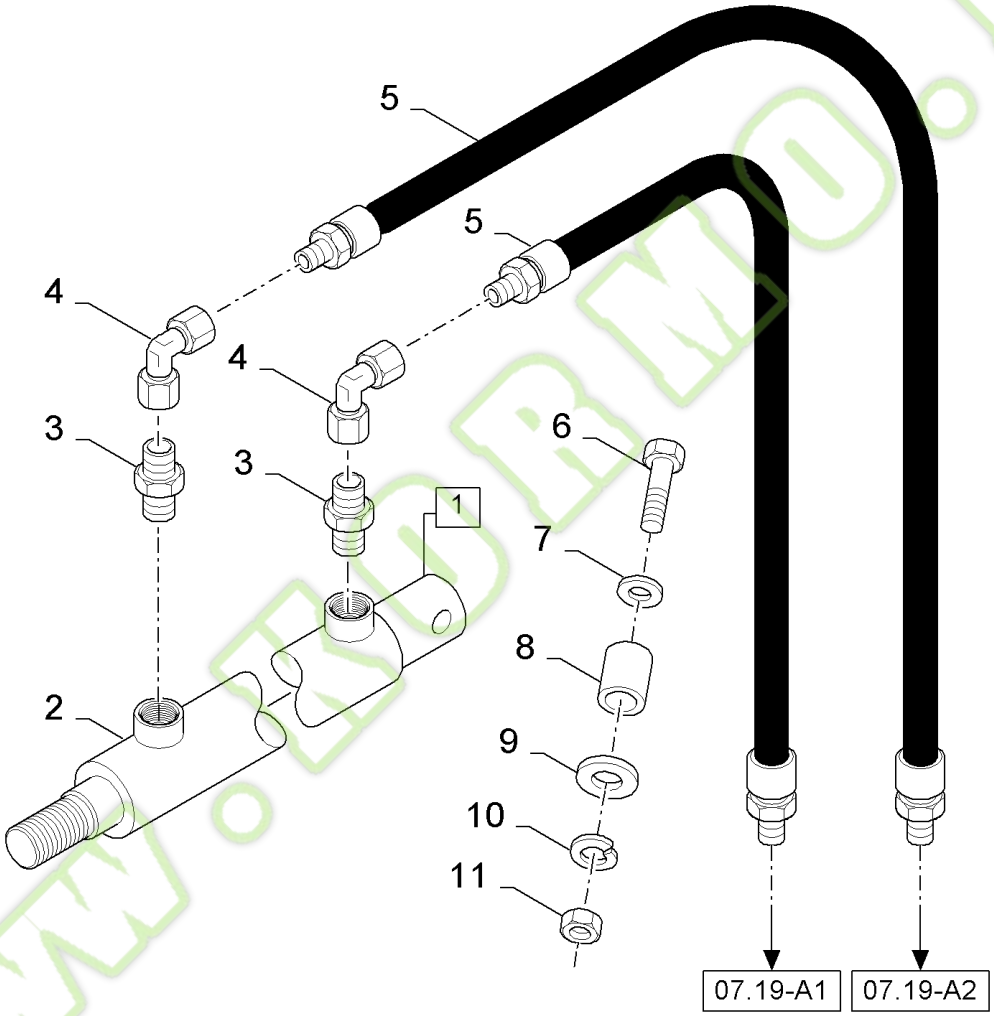

www.BORMO.BY

FX50 SELF-PROPELLED FORAGE HARVESTER (10/02-)

07.15(01) CYLINDER FOR SPOUT DEFLECTORS

Ref	Part Number	Qty	Description
1	84017438	1	HYDRAULIC CYLINDER, (2)
2	84023899	1	KIT, SEALS,
3	386215	2	CONNECTOR, HYD., {PP:80386215}
4	418283	2	ELBOW, {PP:80418283}
5	84038148	2	HOSE, FLEXIBLE,
6	412183	8	BOLT, {PP:80412183} Short NK, M10 x 35, Cl8.8, Full Thd,
7	140018	8	WASHER, {PP:80140018} M12 x 24 x 2.5,
8	9514390	8	RING, {PP:89514390}
9	140042	8	WASHER, LOCK, {PP:80140042} M10 x 34 x 3, 10MM
10	140045	8	WASHER, LOCK, {PP:80140045} Belleville, M10, 10MM
11	100016	8	NUT, {PP:80100016} M10, Cl 8, M10

www.KOBMO.BY

07.15A(01) SPOUT, VALVE

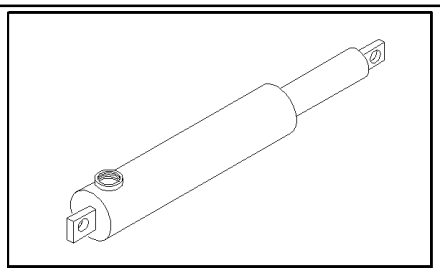

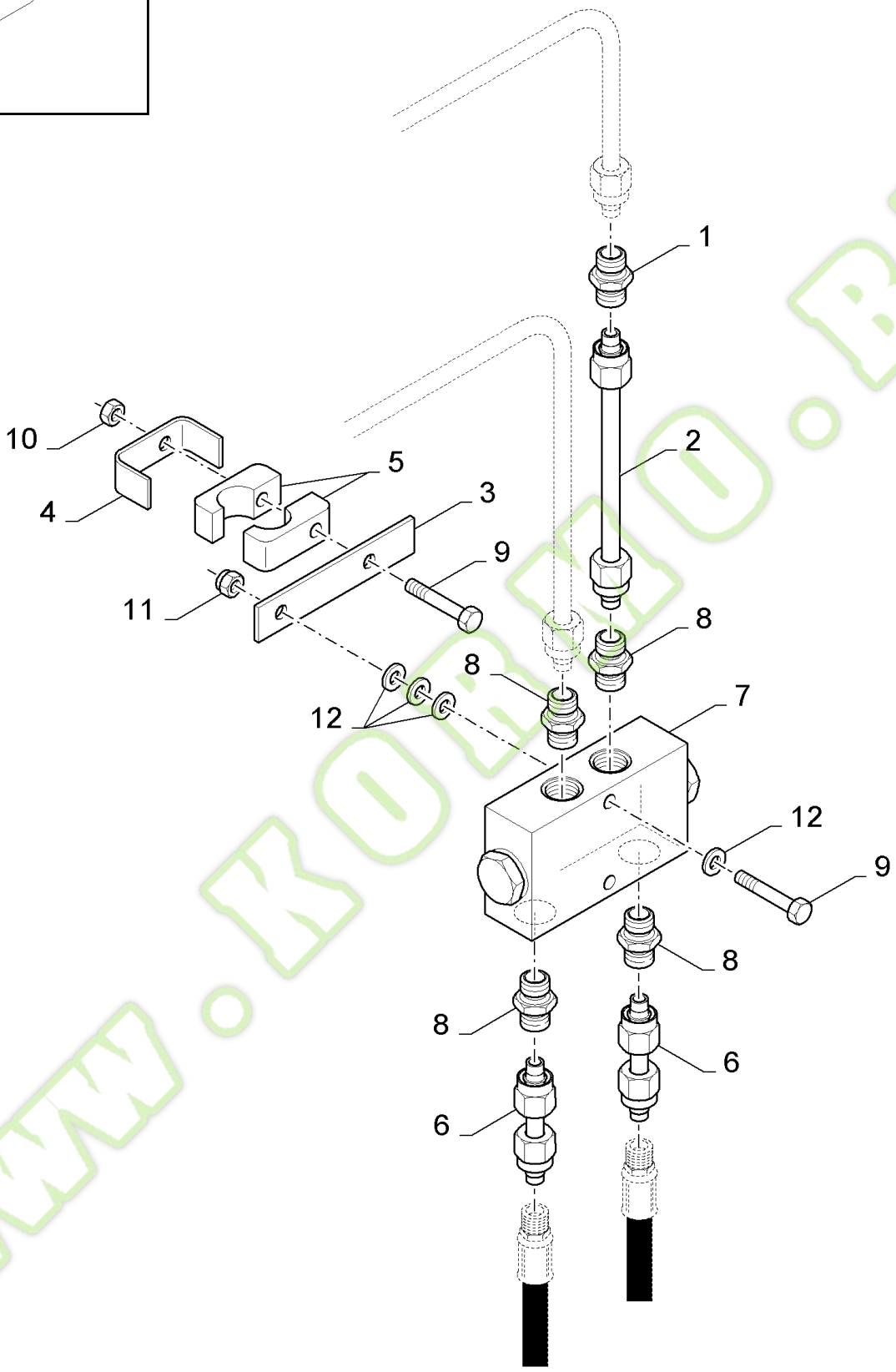

www.KORO.BY

FX50 SELF-PROPELLED FORAGE HARVESTER (10/02-)

07.15A(01) SPOUT, VALVE

Ref	Part Number	Qty	Description
1	335172	1	CONNECTOR, HYD., {PP:80335172}
2	84455175	1	TUBE,
3	9511897	1	SHAFT,
4	433100	1	SUPPORT, {PP:80433100}
5	433007	2	CLAMP, {PP:80433007}
6	84455176	2	TUBE,
7	84455107	1	VALVE, CHECK,
8	84077400	4	CONNECTOR, HYD.,
9	120056	2	SCREW, {PP:80120056} Hex, M6 x 50, 8.8, M6x50
10	412152	1	NUT, {PP:80412152} M6 x 1, Cl 8.8, M6
11	9706755	1	NUT, {PP:89706755} M6, Cl 8, M6
12	86588450	4	WASHER, M6, 6MM

www.KOBMO.BY

07.16(01) HYDRAULIC PUMP - C322

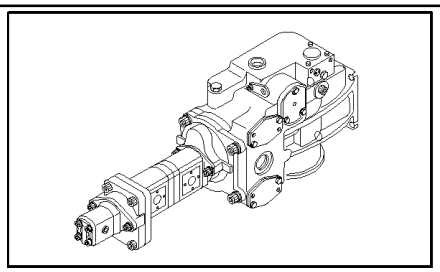

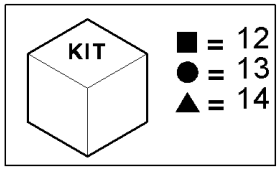

13.06

9
8
7
9
10
8
7
9
8
7

07.21

11

5

6

16

1

4

15

■

07.17

6

16

2

3

●

▲

www.BOBMOBY

FX50 SELF-PROPELLED FORAGE HARVESTER (10/02-)

07.16(01) HYDRAULIC PUMP - C322

Ref	Part Number	Qty	Description
1	89850501	1	PUMP, HYDRAULIC, (2 to 5)
2	89811116	1	PUMP, SMALL, 1.7CC (14)
3	84021308	1	BLOCK, COUPLING,
4	89833309	1	PUMP, SMALL, 6CC (13)
5	84021306	1	PUMP, SMALL, 19.2CC (12)
6	140078	2	WASHER, {PP:80140078}
7	280854	3	BOLT, {PP:80280854} Hex, M14 x 35, 8.8, Full Thd, M14x35
8	140047	3	WASHER, LOCK, {PP:80140047}
9	140086	3	WASHER, {PP:80140086}
10	89835745	1	SCREW,
11	84031760	1	O-RING,
12	84031761	2	KIT, SEALS,
13	84031762	1	KIT, SEALS,
14	84031763	1	KIT, SEALS,
15	84056576	1	SPIDER,
16	82039	2	SCREW, {PP:80082039} Hex Soc Hd, 3/8"-16 x 1 1/4",

www.KOBMO.BY

07.16A(01) HYDRAULIC PUMP - D323

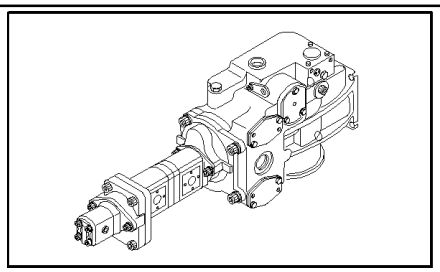

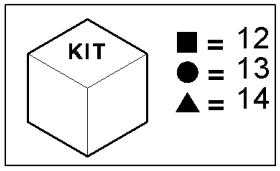

13.06

9
8
7
9
10
8
7
9
8
7

07.21

11

5

6

16

1

4

15

■

07.17

6

16

2

3

●

▲

www.BOBMOBY

FX50 SELF-PROPELLED FORAGE HARVESTER (10/02-)

07.16A(01) HYDRAULIC PUMP - D323

Ref	Part Number	Qty	Description
1	84455407	1	PUMP, HYDRAULIC, (2 to 5, 11 to 15)
2	84455440	1	PUMP, SMALL, 1.7CC (14)
3	84021308	1	BLOCK, COUPLING,
4	89833309	1	PUMP, SMALL, 6CC (13)
5	84021306	1	PUMP, SMALL, 19.2CC (12)
6	140078	2	WASHER, {PP:80140078}
7	280854	3	BOLT, {PP:80280854} Hex, M14 x 35, 8.8, Full Thd, M14x35
8	140047	3	WASHER, LOCK, {PP:80140047}
9	140086	3	WASHER, {PP:80140086}
10	89835745	1	SCREW,
11	84031760	1	O-RING,
12	84455441	1	KIT, SEALS,
13	84455442	1	KIT, SEALS,
14	84455443	1	KIT, SEALS,
15	84056576	1	SPIDER,
16	82039	2	SCREW, {PP:80082039} Hex Soc Hd, 3/8"-16 x 1 1/4",

www.KOBMO.BY

07.17(01) HYDRAULIC PIPES

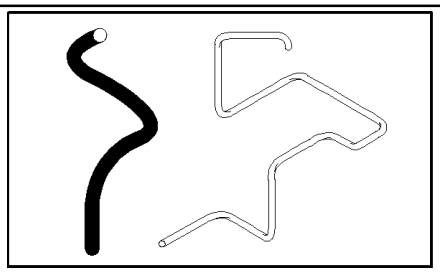

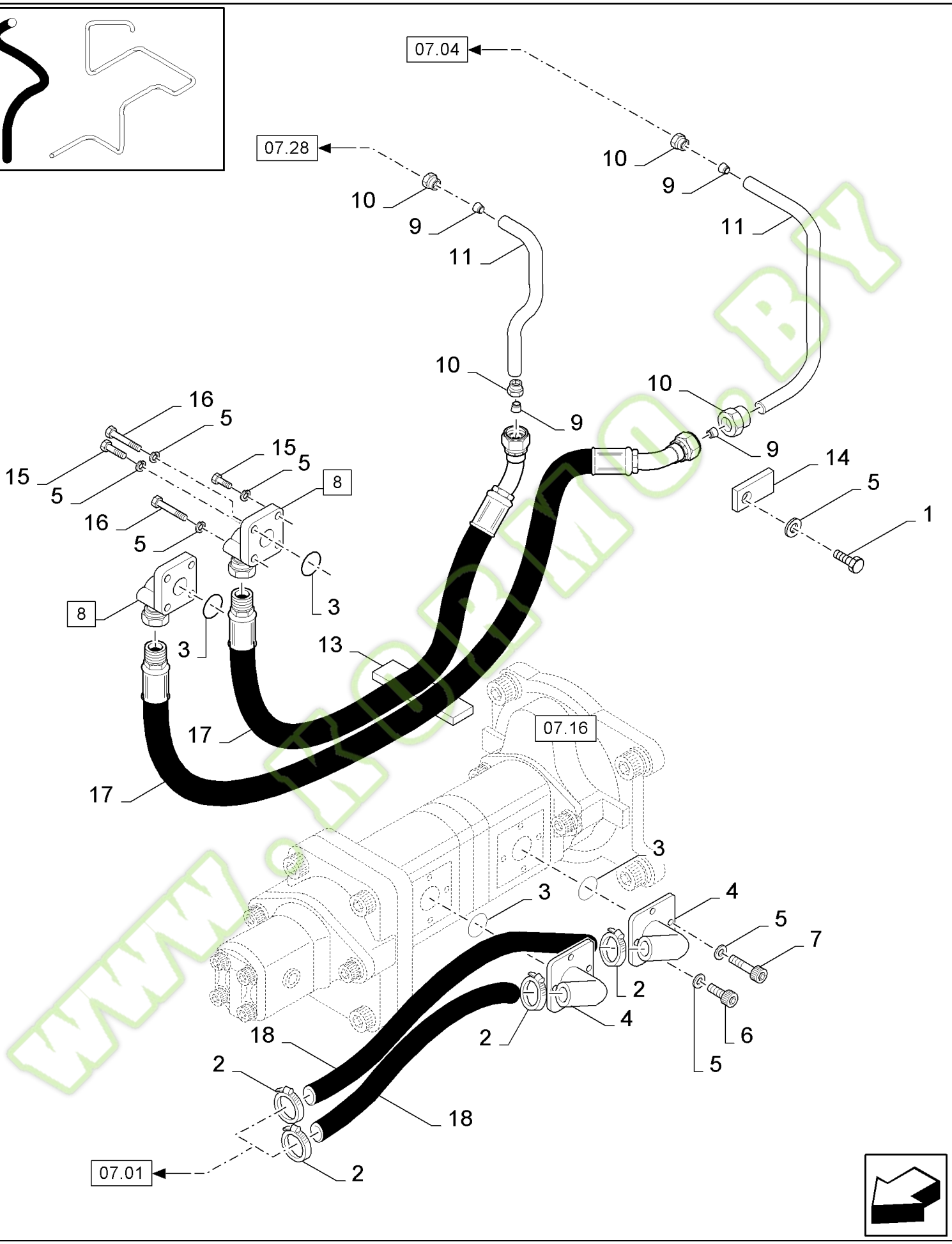

FX50 SELF-PROPELLED FORAGE HARVESTER (10/02-)

07.17(01) HYDRAULIC PIPES

Ref	Part Number	Qty	Description
1	300508	1	SCREW, {PP:80300508} Hex, M6 x 45, 8.8, M16x45
2	382527	4	CLAMP, {PP:80382527}
3	167266	2	O-RING, {PP:80167266} 12-1, 90 Duro, .924 ID x .116" Thk, 90 Duro, .924" ID x .116" Thk
4	753432	2	FILTER, {PP:80753432}
5	322357	AR	WASHER, LOCK, {PP:80322357} Belleville, M6, Belleville, M6
6	356464	4	SCREW, {PP:80356464} M6x50
7	84089718	4	SCREW, M6x20
8	337208	2	ELBOW, {PP:80337208} (3,5,15,16)
9	335169	AR	FERRULE, {PP:80335169}
10	335171	AR	NUT, {PP:80335171}
11	371536	AR	TUBE, RIGID, {PP:80371536} D=16
12	335174	AR	CONNECTOR, HYD., {PP:80335174}
13	84000903	1	BRACKET,
14	84031410	1	PLATE, COVER,
15	84089718	4	SCREW, M6x20
16	356464	4	SCREW, {PP:80356464} M6x50
17	9815902	2	HOSE, {PP:89815902} 27-1/2" Long
18	84068790	2	HOSE, 2205mm Long - Cut to Length

www.KOBMO.BY

07.18(01) HYDRAULIC FOR PUMP

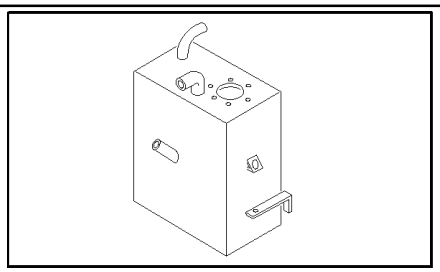

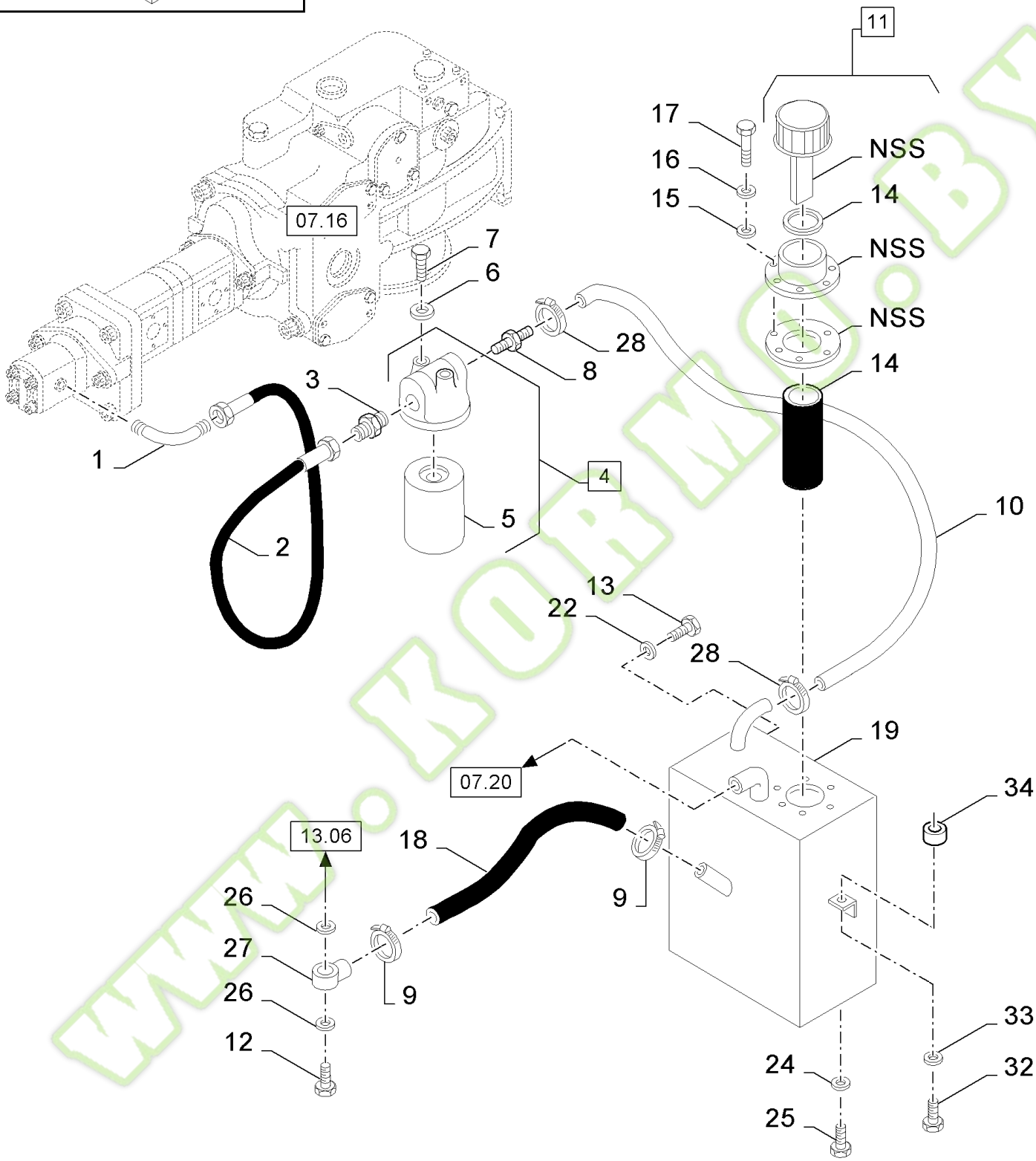

www.KOBMO.BY

FX50 SELF-PROPELLED FORAGE HARVESTER (10/02-)

07.18(01) HYDRAULIC FOR PUMP

Ref	Part Number	Qty	Description
1	128818	1	CONNECTOR, HYD., {PP:80128818} 3/4"-16, 37є x 3/4"-16, O-Ring,
2	84400124	1	HOSE,
3	89838173	1	CONNECTOR, HYD.,
4	89833456	1	FILTER, HYDRAULIC OIL, (5)
5	89811117	1	FILTER, ELEMENT,
6	322358	5	WASHER, LOCK, {PP:80322358} Belleville, M8,
7	80120104	2	SCREW, M8x20
8	89835291	1	CONNECTOR, HYD.,
9	382528	2	CLAMP, {PP:80382528}
10	84036847	1	HOSE,
11	84807524	1	COVER, CAP, (14)
12	89818709	1	SCREW, HOLLOW,
13	43130	1	SCREW, {PP:80043130} Hex, M8 x 50, 8.8, M8x50
14	456473	1	FILTER, ENGINE OIL, {PP:80456473} (WHITE SEAL RING)
15	373817	6	ELEMENT, SEALING, {PP:80373817}
16	9824326	6	WASHER, {PP:89824326} M5, 5MM
17	120098	6	SCREW, {PP:80120098} Hex, M5 x 20, 8.8, Full Thd, M5x20
18	84036848	1	HOSE,
19	84437717	1	TANK,
22	140016	1	WASHER, {PP:80140016} M8 x 16 x 1.6,
24	9511034	1	GASKET, {PP:89511034}
25	150060	1	PLUG, {PP:80150060}
26	84026508	2	RING,
27	89818710	1	CONNECTOR, HYD.,
28	382527	2	CLAMP, {PP:80382527}
32	325829	1	SCREW, {PP:80325829} Hex, M10 x 45, 8.8, M10x45
33	140045	1	WASHER, LOCK, {PP:80140045} Belleville, M10, 10MM
34	9513106	3	RING, {PP:89513106}

www.KOBMO.BY

07.19(01) HYDRAULIC LINES TO LOW PRESSURE VALVE

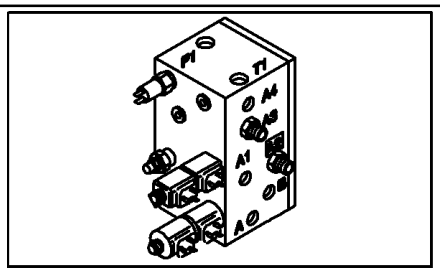

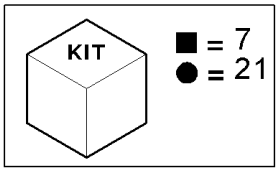

18
19
17
1
20
●
2
3
13.02
07.16
16
15
2
1
2
1
07.15
3
11
10
8
P1
T1
A4
A3
A1
A2
B
A
2
1
5
1
2
23
25
14
5
2
3
1
2
12
24
13
4
1
2
3
2
1
6
14
■
22
2
1
4
3
05.12

www.kubmo.by

FX50 SELF-PROPELLED FORAGE HARVESTER (10/02-)

07.19(01) HYDRAULIC LINES TO LOW PRESSURE VALVE

Ref	Part Number	Qty	Description
1	335136	12	FERRULE, {PP:80335136}
2	335135	12	NUT, {PP:80335135}
3	371540	AR	TUBE, RIGID, {PP:80371540} D=8
4	89513082	5	CONNECTOR, HYD.,
5	335172	2	CONNECTOR, HYD., {PP:80335172}
6	84038141	1	VALVE, HYDRAULIC, (7,14), 4 WHEEL DRIVE
7	84038162	1	KIT, SEALS, , 4 WHEEL DRIVE
8	84037241	1	VALVE, HYDRAULIC, (9 to 14,24,25)
9	84053805	1	KIT, SEALS,
10	84011379	2	RING,
11	84021144	1	SWITCH, ASSY, 5 BAR
12	84004884	1	SWITCH, 24 BAR
13	84053806	2	ELECTROMAGNET, 12V DC
14	84015319	2	ELECTROMAGNET, 12V DC
15	322358	4	WASHER, LOCK, {PP:80322358} Belleville, M8, 8MM
17	424524	1	HOSE, {PP:80424524}
18	418283	1	ELBOW, {PP:80418283}
19	386215	1	CONNECTOR, HYD., {PP:80386215}
20	84007352	1	CYLINDER, (21)
21	84026516	1	KIT, SEALS,
22	84052207	1	HARNESS, WIRE,
23	84062508	1	VALVE, HYDRAULIC,
24	84062745	1	VALVE, HYDRAULIC,
25	84062744	1	VALVE, HYDRAULIC,
16	16043224	4	SCREW, Hex, M8 x 16, 8.8, Full Thd, M8x12

www.KOBMO.BY

07.20(01) HYDRAULIC LINES TO LOW PRESSURE VALVE

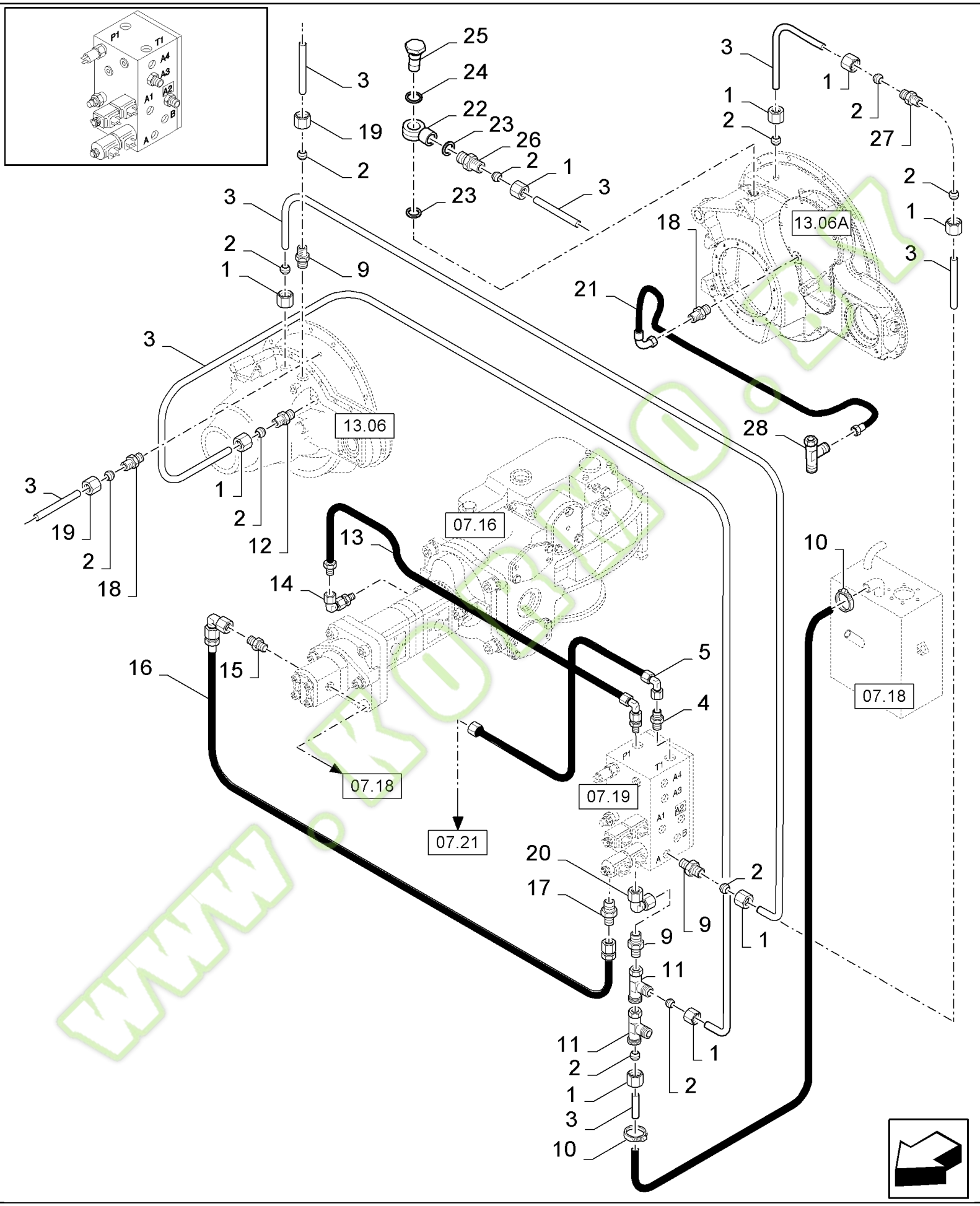

FX50 SELF-PROPELLED FORAGE HARVESTER (10/02-)

07.20(01) HYDRAULIC LINES TO LOW PRESSURE VALVE

Ref	Part Number	Qty	Description
1	86548975	5	NUT,
2	150014	5	FERRULE, {PP:80150014}
3	371539	AR	TUBE, RIGID, {PP:80371539} D=10
4	89513082	2	CONNECTOR, HYD.,
5	84442287	1	HOSE,
6	335136	2	FERRULE, {PP:80335136}
7	335135	2	NUT, {PP:80335135}
8	371540	AR	TUBE, RIGID, {PP:80371540} D=8
9	420522	AR	CONNECTOR, HYD., {PP:80420522}
10	574518	2	CLAMP, {PP:80574518}
11	734031	2	CONNECTOR, HYD., {PP:80734031}
12	395019	1	CONNECTOR, HYD., {PP:80395019}
13	84052145	1	HOSE, FLEXIBLE, , BSN C305
13	84442287	1	HOSE, , ASN D306
14	84018535	1	ELBOW, , BSN C297
15	76350	1	CONNECTOR, HYD., {PP:80076350} 9/16"-18, 37є x 9/16"-18, O-Ring,
16	84045344	1	HOSE, FLEXIBLE,
17	84045343	1	CONNECTOR, HYD.,
18	395019	1	CONNECTOR, HYD., {PP:80395019}
19	86548975	1	NUT, M10
20	418284	1	ELBOW, {PP:80418284}
21	84818084	1	HOSE, , ASN D298
22	9832303	2	CONNECTOR, HYD., {PP:89832303} , ASN D298
23	84439102	4	RING, , ASN D298
24	355607	2	RING, {PP:80355607} , ASN D298
25	9832304	2	SCREW, {PP:89832304} , ASN D298
26	84818553	2	NIPPLE, LUBE, , ASN D298
27	150017	1	CONNECTOR, HYD., {PP:80150017} , ASN D298
28	395472	1	CONNECTION, 3 WAY, {PP:80395472} , ASN D298

www.KORMO.BY

07.21(01) HYDROSTATIC TRACTION

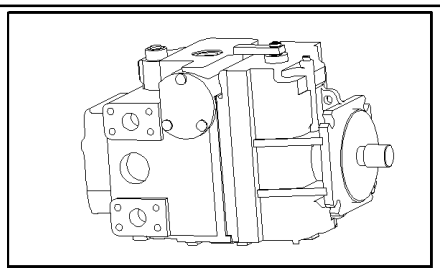

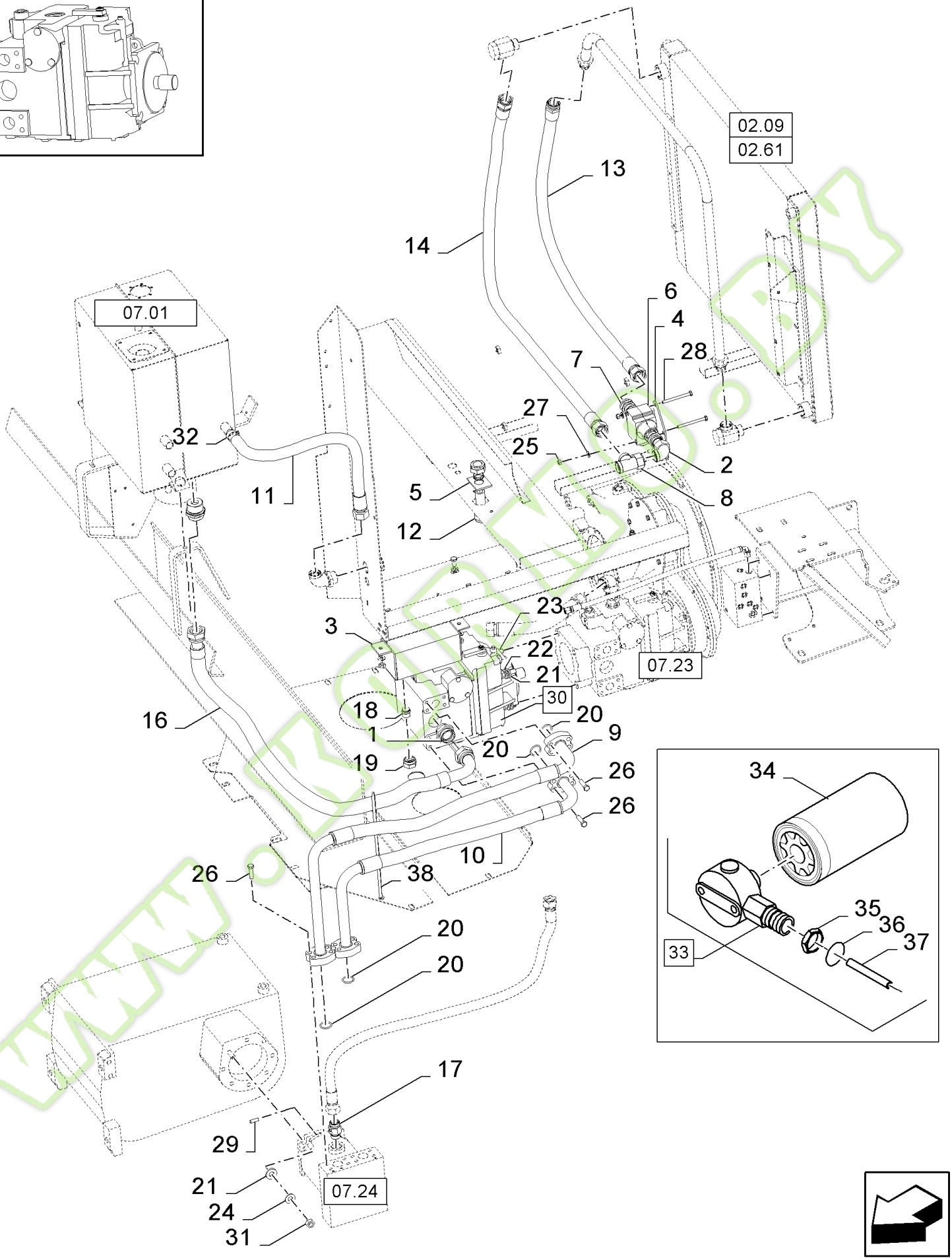

FX50 SELF-PROPELLED FORAGE HARVESTER (10/02-)

07.21(01) HYDROSTATIC TRACTION

Ref	Part Number	Qty	Description
1	84442372	1	CONNECTOR, HYD.,
2	457573	1	ELBOW, {PP:80457573}
3	84814811	1	TUBE,
4	84442719	1	SUPPORT,
5	84442202	1	SEAL, RUBBER,
6	84074158	1	THERMOSTAT,
7	84074173	3	CONNECTOR, HYD.,
8	9507672	1	CONNECTION, 3 WAY, {PP:89507672}
9	84442350	1	HOSE,
10	84442357	1	HOSE,
11	84442365	1	HOSE,
12	84442423	1	TUBE,
13	84442364	1	HOSE,
14	84442366	1	HOSE,
16	84442369	1	HOSE,
17	84442370	1	CONNECTOR, HYD.,
18	84442790	1	PLUG,
19	84442792	1	FERRULE,
20	353108	4	O-RING, {PP:80353108} -219, 70 Duro, 1.296" ID x .139" Thk,
21	140086	8	WASHER, {PP:80140086}
22	86513238	4	WASHER, LOCK, 1/2"
23	87689	4	BOLT, {PP:80087689} Hex, 1/2"-13 x 1 1/2", G5, Full Thd, 0.5"x1.5"
24	140046	4	WASHER, LOCK, {PP:80140046} Belleville, M12, 12MM
25	89706690	2	NUT, CL 8, M8 x 1.25 x 13.0
26	84015552	16	SCREW, Hex, 7/16"-14 x 1/2", 12.9, M8x60
27	322358	2	WASHER, LOCK, {PP:80322358} Belleville, M8, 8MM
28	366046	2	BOLT, {PP:80366046} Short NK, M8 x 80, Cl8.8, M8x80
29	80781	1	PLUG, {PP:80080781}
30	84817133	1	PUMP, HYDROSTATIC, (34)
31	89706685	4	NUT, M12
32	382527	1	CLAMP, {PP:80382527}
33	84031879	1	FILTER, Head Assy., (34 to 37)
34	84074777	1	FILTER, HYDRAULIC OIL,
35	84037209	1	NUT,
36	84037207	1	O-RING,
37	84037208	1	TUBE, RIGID,
38	84449335	11	STRAP,

WWW.KUBMO.BY

07.22(01) HYDROSTATIC TRACTION

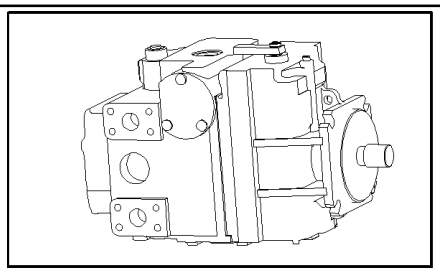

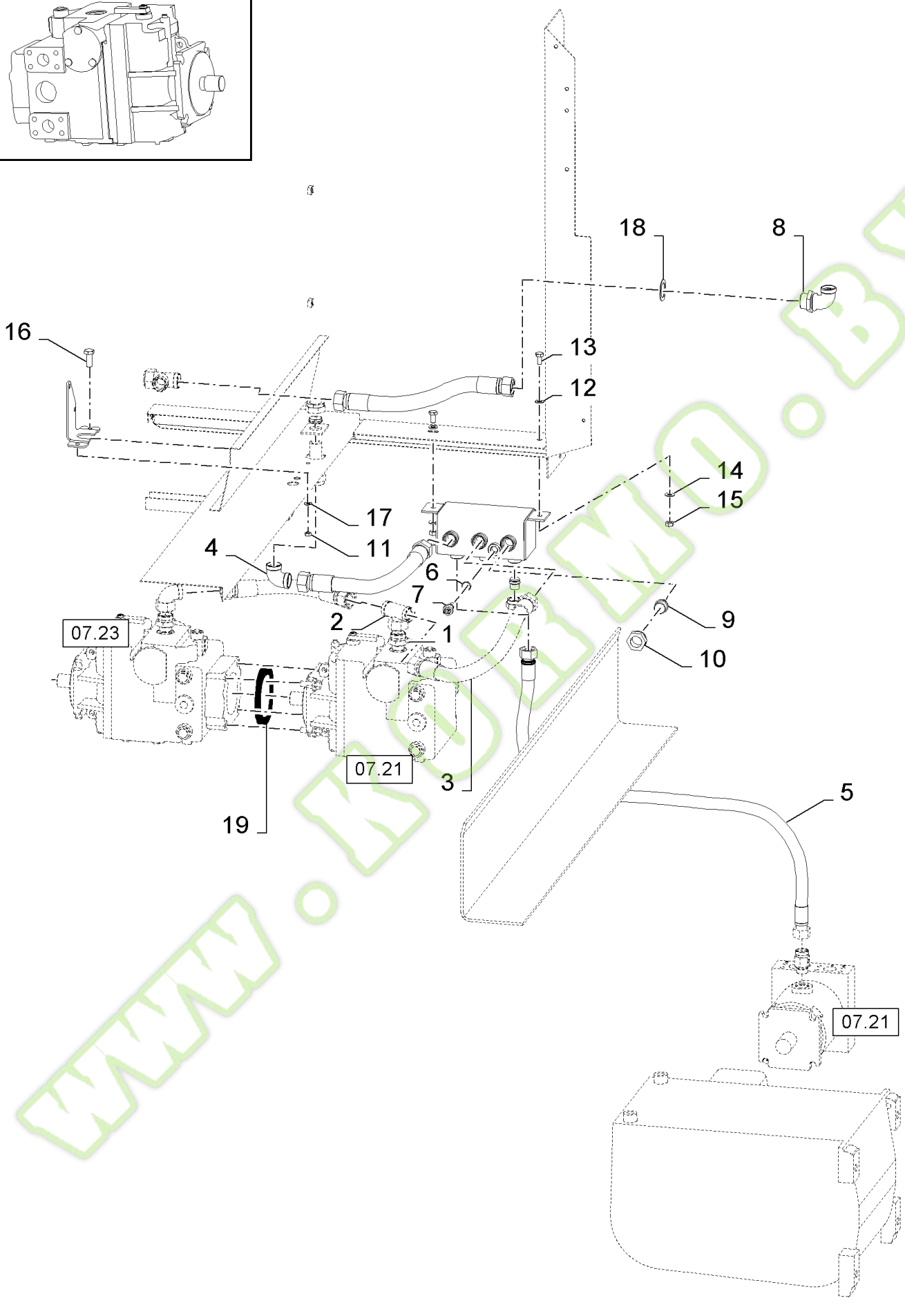

www.KUBMO.BY

FX50 SELF-PROPELLED FORAGE HARVESTER (10/02-)

07.22(01) HYDROSTATIC TRACTION

Ref	Part Number	Qty	Description
1	9511910	1	CONNECTOR, HYD., {PP:89511910}
2	84041626	1	CONNECTION, 3 WAY,
3	84442341	3	HOSE,
4	84004868	1	CONNECTOR, HYD.,
5	84442379	1	HOSE,
6	9511034	1	GASKET, {PP:89511034}
7	84021678	1	SENDER UNIT,
8	84431356	1	CONNECTOR, HYD.,
9	84442791	1	PLUG,
10	412527	1	NUT, {PP:80412527}
11	89706690	2	NUT, CL 8, M8 x 1.25 x 13.0
12	140017	2	WASHER, LOCK, {PP:80140017} M10 x 20 x 2, 10MM, BSN C305
13	43138	2	SCREW, {PP:80043138} Hex, M10 x 20, 8.8, Full Thd, M10x20
14	140045	2	WASHER, LOCK, {PP:80140045} Belleville, M10, 10MM
15	100016	2	NUT, {PP:80100016} M10, Cl 8, M10, BSN C305
16	80120104	2	SCREW, M8x20
17	322358	2	WASHER, LOCK, {PP:80322358} Belleville, M8, 8MM
18	9800957	1	WASHER, {PP:89800957}
19	84062674	1	O-RING,

www.KOBMO.BY

07.22A(01) HYDROSTATIC TRACTION - D306

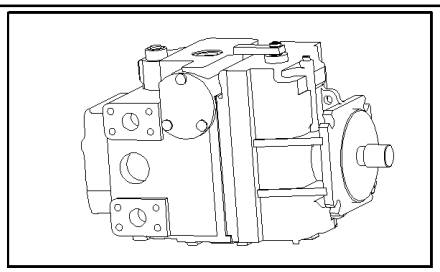

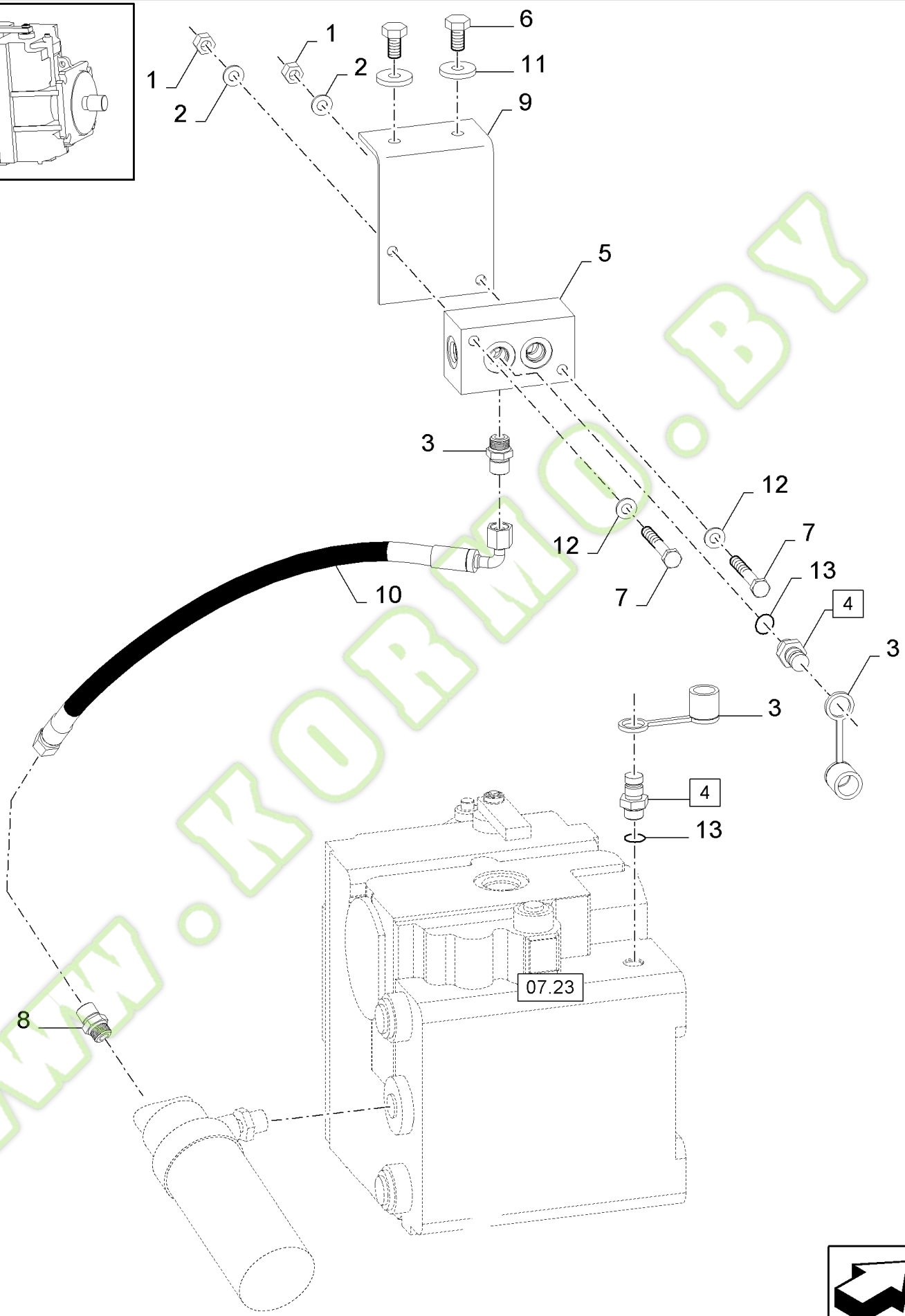

www.KOBMO.BY

FX50 SELF-PROPELLED FORAGE HARVESTER (10/02-)

07.22A(01) HYDROSTATIC TRACTION - D306

Ref	Part Number	Qty	Description
1	89706690	2	NUT, M8
2	322358	2	WASHER, LOCK, {PP:80322358} Belleville, M8, 8MM
3	86502604	2	DUST CAP,
4	86596853	2	COUPLING, QUICK, MALE, (13)
5	84447681	1	STRAP,
6	120103	2	SCREW, {PP:80120103} Hex, M8 x 16, 8.8, M8x16
7	43130	2	SCREW, {PP:80043130} Hex, M8 x 50, 8.8,
8	84077400	2	CONNECTOR, HYD.,
9	84447701	1	PLATE,
10	84442287	1	HOSE,
11	140041	2	WASHER, {PP:80140041} M8 x 28 x 3,
12	140016	2	WASHER, {PP:80140016} M8 x 16 x 1.6,
13	9617873	AR	O-RING, {PP:89617873} 6-1, 90 Duro, .468" ID x .078" Thk, 6-1, 90 Duro, .468" ID x .078" Thk

www.KOBMO.BY

07.23(01) HYDROSTATIC FEEDROLLS

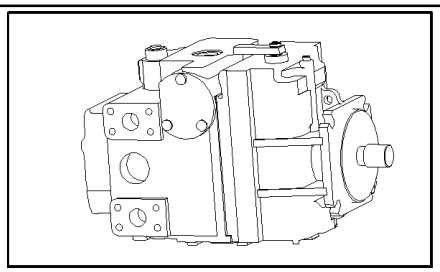

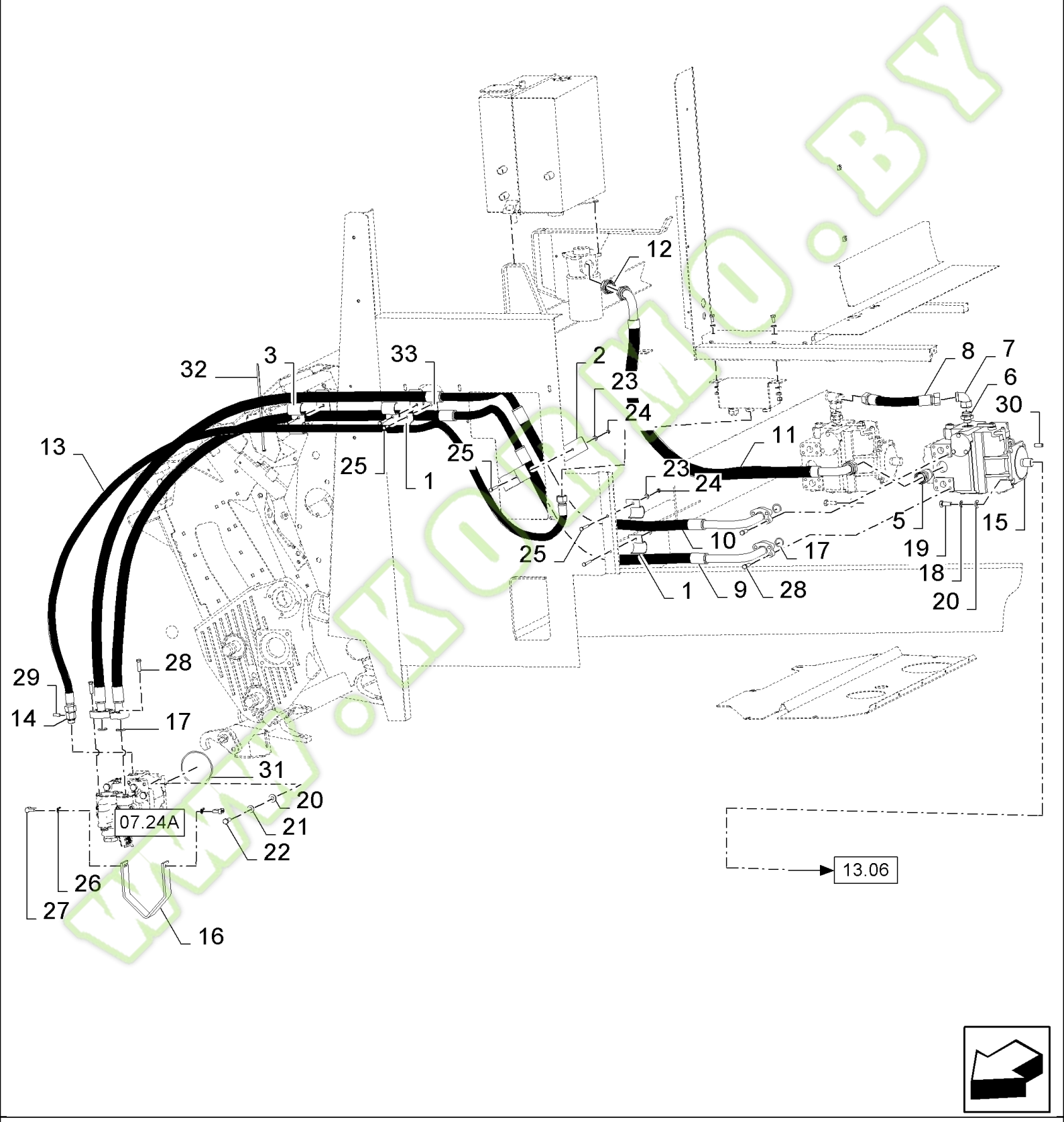

FX50 SELF-PROPELLED FORAGE HARVESTER (10/02-)

07.23(01) HYDROSTATIC FEEDROLLS

Ref	Part Number	Qty	Description
1	84442275	AR	CLAMP,
2	84442285	3	PLATE,
3	84435979	3	CLAMP,
5	84100797	1	CONNECTOR, HYD.,
6	9511910	1	CONNECTOR, HYD., {PP:89511910}
7	457573	1	ELBOW, {PP:80457573}
8	84442358	1	HOSE,
9	84442288	1	HOSE, , BSN C305
9	84442289	1	HOSE, , ASN D306
10	84442289	1	HOSE, , BSN C305
10	84442288	1	HOSE, , ASN D306
11	84442368	1	HOSE,
12	84442700	1	CONNECTOR, HYD.,
13	84442388	1	HOSE,
14	84442370	1	CONNECTOR, HYD.,
15	84817134	1	PUMP, HYDROSTATIC,
16	84443686	1	COVER, , BSN C277
16	84447455	1	COVER, , ASN D278
17	353108	4	O-RING, {PP:80353108} -219, 70 Duro, 1.296" ID x .139" Thk,
18	140030	3	WASHER, LOCK, {PP:80140030} M14, 14MM
19	280854	3	BOLT, {PP:80280854} Hex, M14 x 35, 8.8, Full Thd, M14x35
20	140086	7	WASHER, {PP:80140086}
21	140046	4	WASHER, LOCK, {PP:80140046} Belleville, M12, 12MM
22	300389	4	SCREW, {PP:80300389} Hex, M12 x 35, 8.8, Full Thd, M12x35, BSN C305
22	89706685	1	NUT, M12, ASN D306
23	322358	AR	WASHER, LOCK, {PP:80322358} Belleville, M8, 8MM
24	89706690	AR	NUT, CL 8, M8 x 1.25 x 13.0
25	86977784	AR	SCREW, M8x60
26	140028	4	WASHER, {PP:80140028} M10, 10MM
27	86508097	4	SCREW, Hex Soc Hd, M10 x 25, 12.9, M10x25, BSN C305
27	120052	4	SCREW, {PP:80120052} Hex Soc Hd, M10 x 25, 8.8, , ASN D306
28	84015552	16	SCREW, Hex, 7/16"-14 x 1/2", 12.9, M8x60
29	80781	1	PLUG, {PP:80080781} , BSN C305
29	84447187	1	PLUG, , ASN D306
30	89835745	1	SCREW,
31	9673006	1	O-RING, {PP:89673006} , BSN C305
32	84449335	AR	STRAP, , ASN D306
33	84446927	1	PLATE, , ASN D306

AUTOKUBMO.BY

07.23A(01) HYDROSTATIC FEEDROLLS - D306

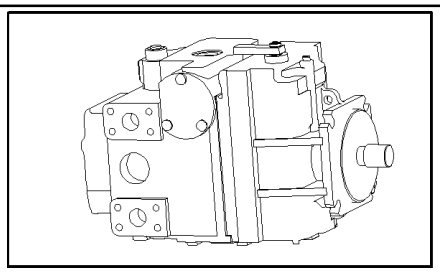

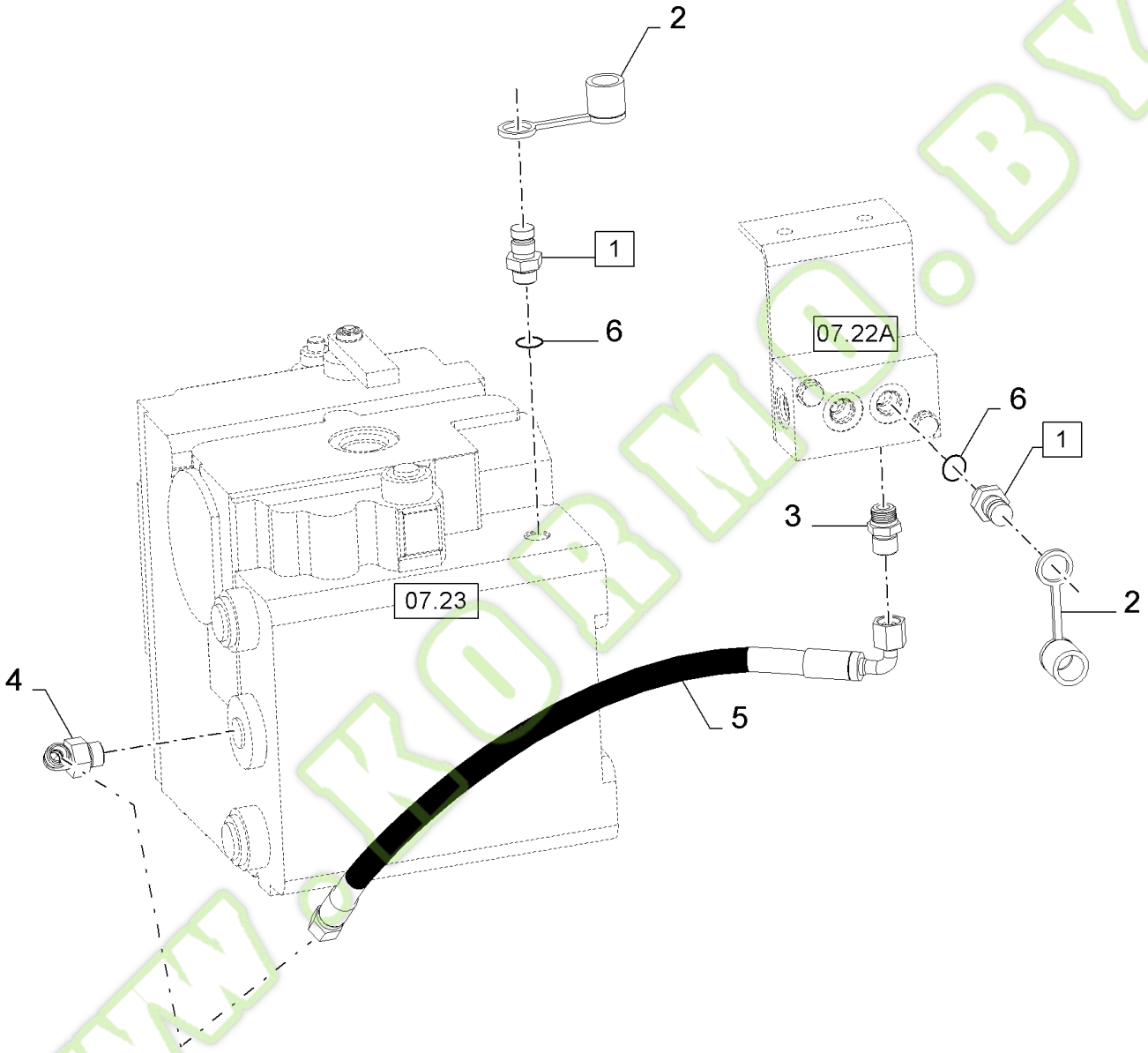

WWW.ROBMO.BY

FX50 SELF-PROPELLED FORAGE HARVESTER (10/02-)

07.23A(01) HYDROSTATIC FEEDROLLS - D306

Ref	Part Number	Qty	Description
1	86596853	1	COUPLING, QUICK, MALE, (6)
2	86502604	1	DUST CAP,
3	84077400	1	CONNECTOR, HYD.,
4	84018535	1	ELBOW,
5	84442287	1	HOSE,
6	9617873	1	O-RING, {PP:89617873} 6-1, 90 Duro, .468" ID x .078" Thk, 6-1, 90 Duro, .468" ID x .078" Thk

www.KOBMO.BY

07.24(01) HYDROSTATIC MOTOR - TRACTION

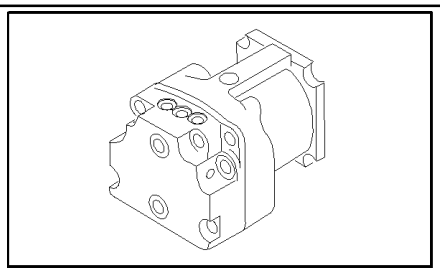

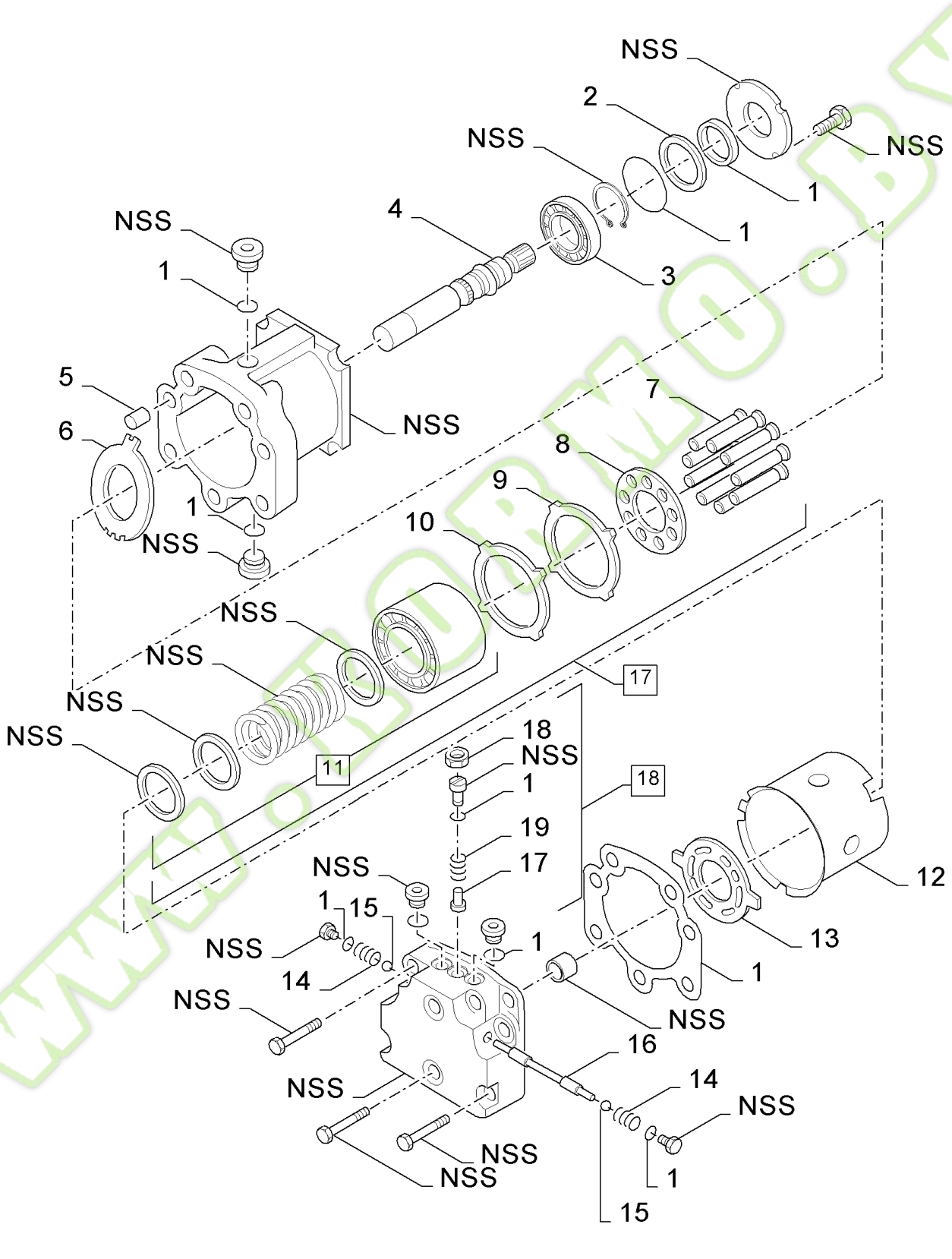

FX50 SELF-PROPELLED FORAGE HARVESTER (10/02-)

07.24(01) HYDROSTATIC MOTOR - TRACTION

Ref	Part Number	Qty	Description
	89511750	1	MOTOR, HYDRAULIC, (1 to 18)
1	9813027	1	KIT, SEALS, {PP:89813027}
2	9811985	1	RING, {PP:89811985}
3	9813010	1	BEARING ASSY, {PP:89813010}
4	9813011	1	SHAFT, {PP:89813011}
5	165179	2	PIN, {PP:80165179}
6	84042002	1	PLATE, THRUST,
7	9832432	9	PISTON, {PP:89832432}
8	84032403	1	RETAINER,
9	9813015	1	RING, {PP:89813015}
10	84042001	1	RING,
11	9813017	1	KIT, {PP:89813017}
12	84032404	1	COVER,
13	9813019	1	PLATE, COVER, {PP:89813019}
14	9832434	2	SPRING, {PP:89832434}
15	9832435	2	RING, {PP:89832435}
16	9832436	1	VALVE, HYDRAULIC, {PP:89832436}
17	84041311	1	KIT, (7 to 11)
18	84042152	1	VALVE, HYDRAULIC,

www.KOBMO.BY

07.24A(01) HYDROSTATIC MOTOR - FEEDROLLS

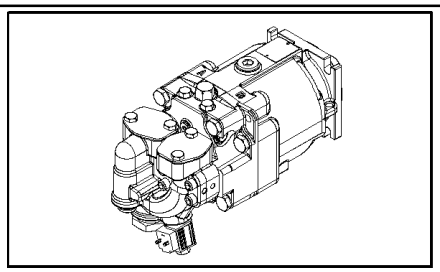

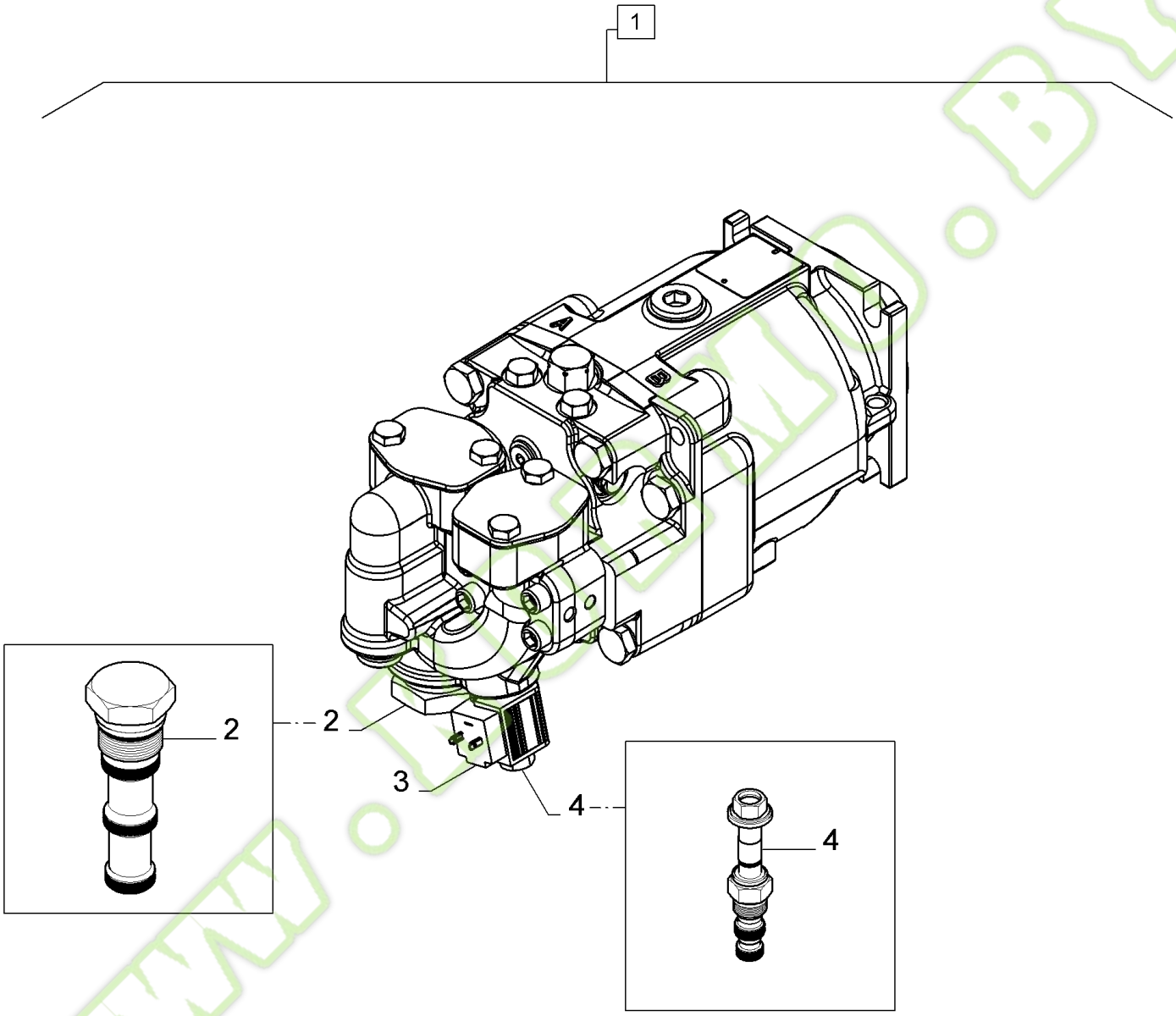

www.tedmd.by

FX50 SELF-PROPELLED FORAGE HARVESTER (10/02-)

07.24A(01) HYDROSTATIC MOTOR - FEEDROLLS

Ref	Part Number	Qty	Description
1	84807753	1	MOTOR, HYDROSTATIC, (2 to 4)
2	84801236	1	VALVE, HYDRAULIC,
3	84801237	1	SOLENOID,
4	84801238	1	VALVE, HYDRAULIC,

WWW.KORMO.BY

07.26(01) ACCUMULATORS

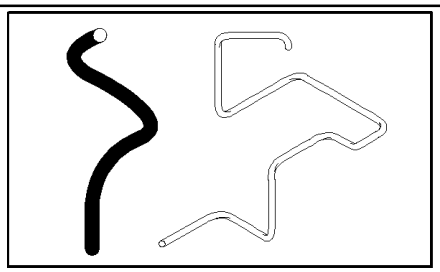

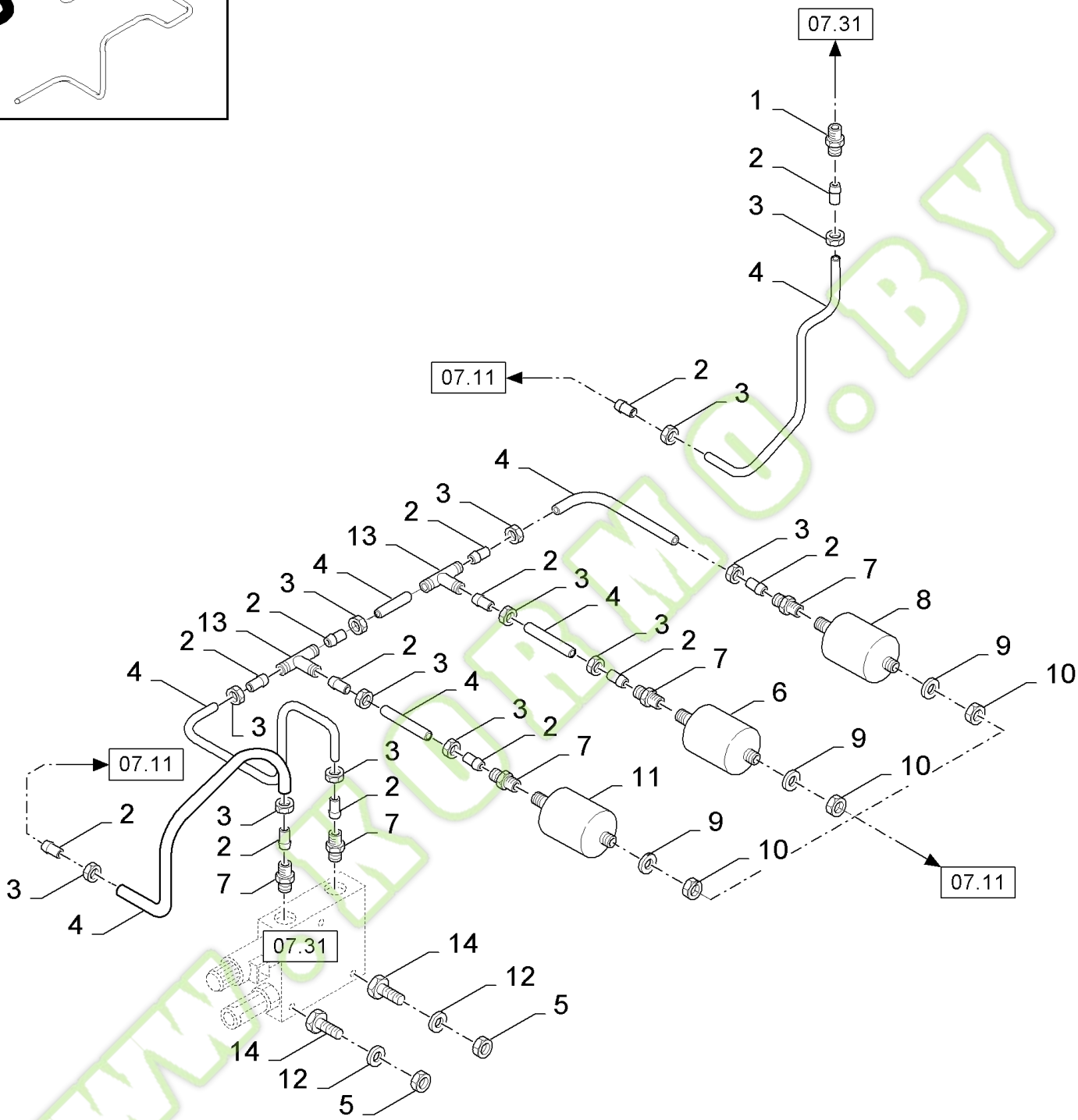

FX50 SELF-PROPELLED FORAGE HARVESTER (10/02-)

07.26(01) ACCUMULATORS

Ref	Part Number	Qty	Description
1	9516261	1	CONNECTOR, HYD., {PP:89516261}
2	150015	12	FERRULE, {PP:80150015}
3	100043	12	NUT, {PP:80100043}
4	9513719	AR	TUBE, RIGID, {PP:89513719} D=12
5	9706755	2	NUT, {PP:89706755} M6, Cl 8, M6
6	84018324	1	ACCUMULATOR, 55 Bar
7	395782	6	CONNECTOR, HYD., {PP:80395782}
8	84042444	1	ACCUMULATOR, 30 Bar
9	140110	2	WASHER, {PP:80140110}
10	308823	2	NUT, {PP:80308823} M28 x 1.5, Cl 8, M28x1.5
11	84017606	1	ACCUMULATOR, 85 Bar
12	322357	2	WASHER, LOCK, {PP:80322357} Belleville, M6, Belleville, M6
13	150019	2	CONNECTION, 3 WAY, {PP:80150019}
14	397985	2	BOLT, {PP:80397985} Hex, M6 x 70, 8.8, Full Thd, M6x70

www.KOBMO.BY

07.27(01) REAR HYDRAULIC LINES

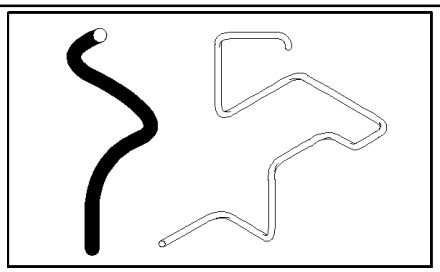

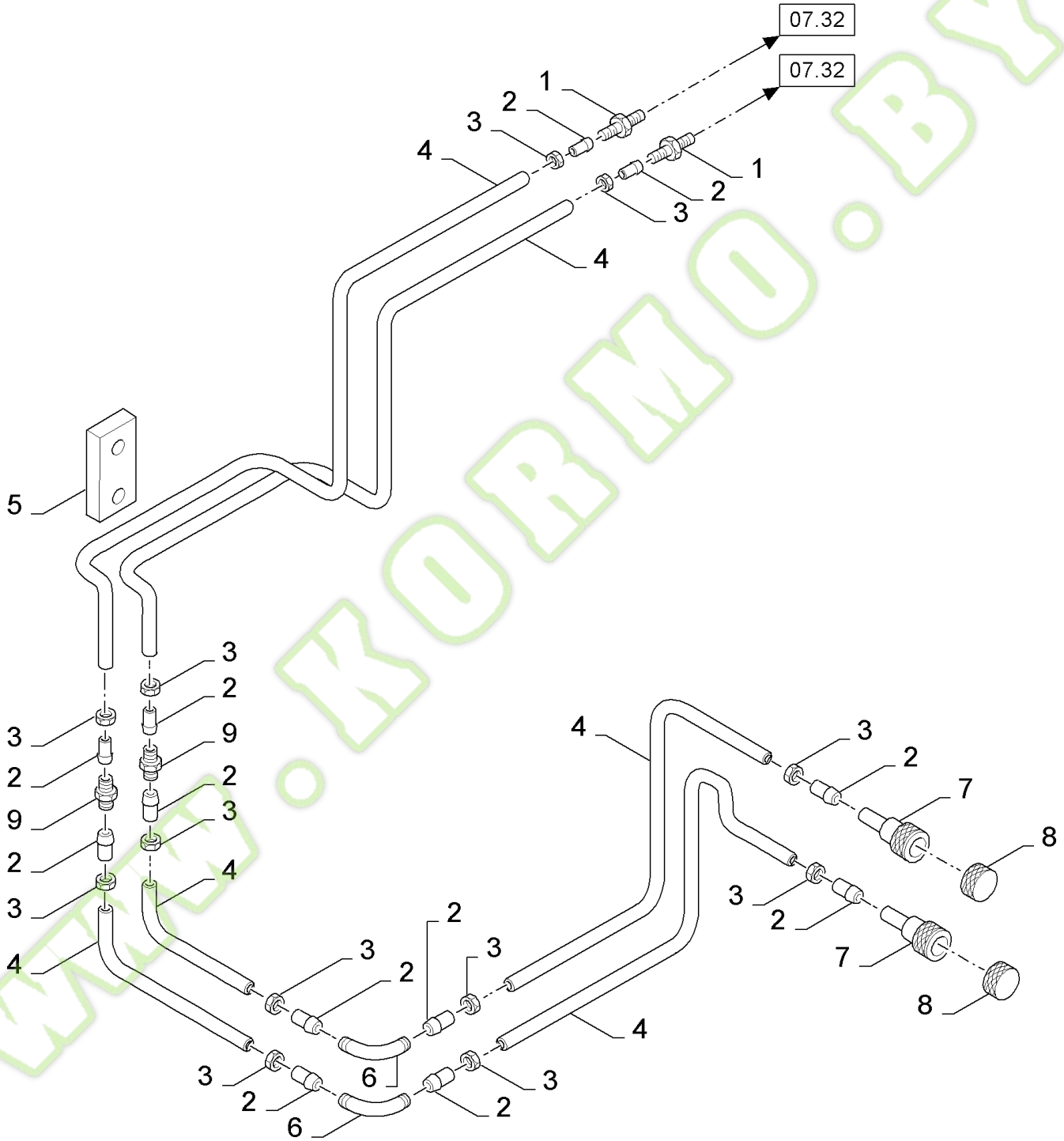

www.KOBMO.BY

FX50 SELF-PROPELLED FORAGE HARVESTER (10/02-)

07.27(01) REAR HYDRAULIC LINES

Ref	Part Number	Qty	Description
1	395782	2	CONNECTOR, HYD., {PP:80395782}
2	150015	12	FERRULE, {PP:80150015}
3	100043	12	NUT, {PP:80100043}
4	9513719	AR	TUBE, RIGID, {PP:89513719} D=12
5	434097	1	BRACKET, {PP:80434097}
6	84014046	2	ELBOW,
7	84018988	2	COUPLING, QUICK, MALE,
8	266220	2	DUST CAP, {PP:80266220}
9	150018	2	CONNECTOR, HYD., {PP:80150018}

WWW.KOBMO.BY

07.28(01) HYDRAULIC LINES TO MAIN VALVE

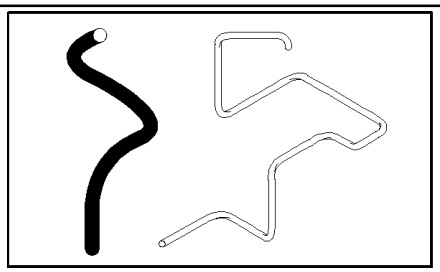

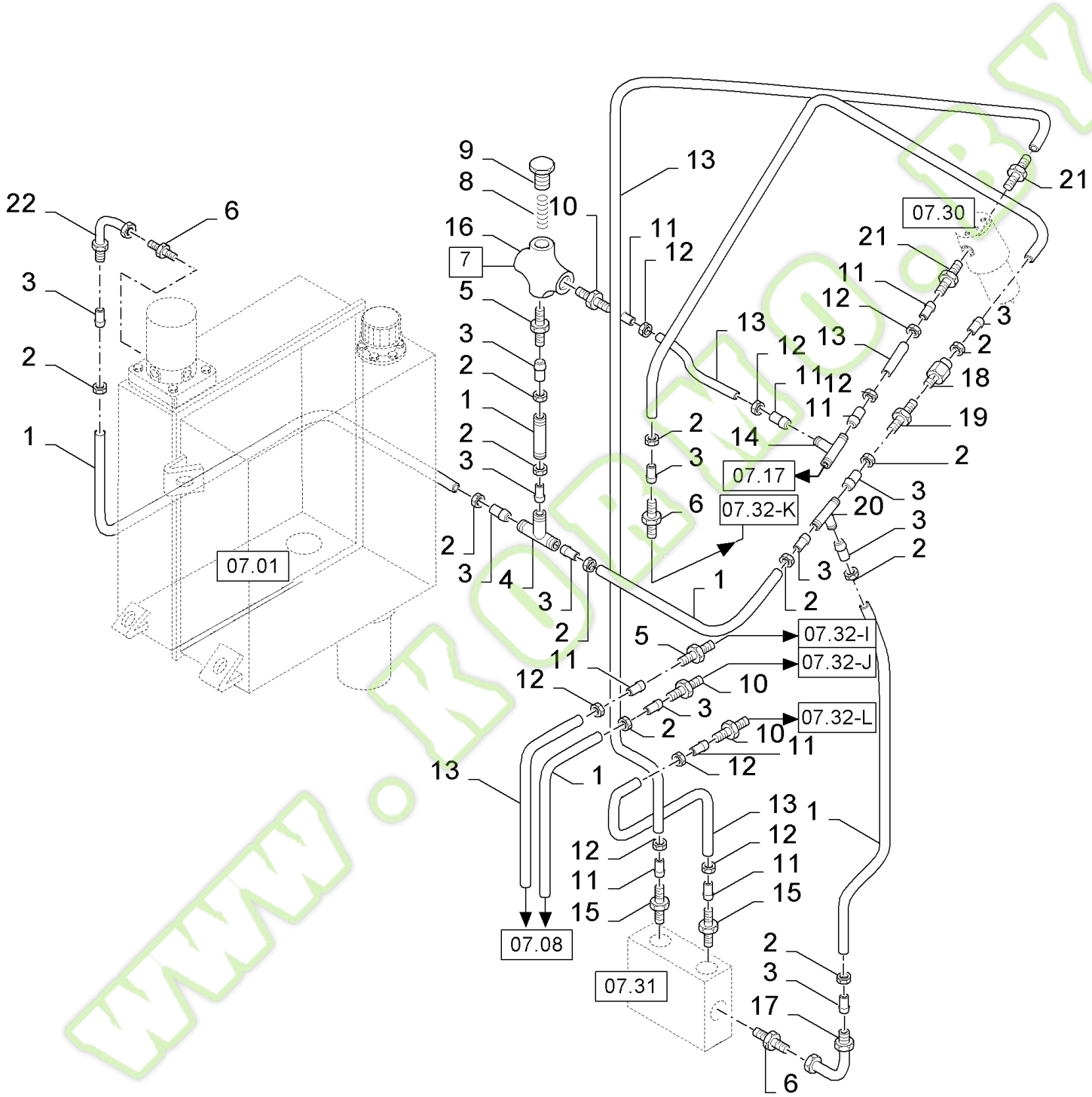

www.RODTOBY

FX50 SELF-PROPELLED FORAGE HARVESTER (10/02-)

07.28(01) HYDRAULIC LINES TO MAIN VALVE

Ref	Part Number	Qty	Description
1	371534	AR	TUBE, RIGID, {PP:80371534} D=18
2	335170	14	NUT, {PP:80335170} M18
3	335168	14	FERRULE, {PP:80335168} 18MM
4	379431	1	CONNECTION, 3 WAY, {PP:80379431}
5	394373	1	CONNECTOR, HYD., {PP:80394373}
6	9501819	2	CONNECTOR, HYD., {PP:89501819}
7	420773	1	VALVE, HYDRAULIC, {PP:80420773} (8, 16)
8	445343	1	SPRING, {PP:80445343}
9	417006	1	PLUG, {PP:80417006}
10	394372	2	CONNECTOR, HYD., {PP:80394372}
11	335169	6	FERRULE, {PP:80335169}
12	335171	6	NUT, {PP:80335171}
13	371536	AR	TUBE, RIGID, {PP:80371536} D=16,L=2M
14	444325	1	CONNECTION, 3 WAY, {PP:80444325}
15	9516263	2	CONNECTOR, HYD., {PP:89516263}
16	84011927	1	KIT, SEALS,
17	84019177	1	ELBOW,
18	89839382	1	VALVE, HYDRAULIC,
19	84042443	1	CONNECTOR, HYD.,
20	84042442	1	CONNECTION, 3 WAY,
21	9850809	2	CONNECTOR, HYD., {PP:89850809}
22	447770	1	CONNECTOR, HYD., {PP:80447770}

www.KOBMO.BY

07.29(01) HYDRAULIC LINES TO MAIN VALVE, WITHOUT CROP PROCESSOR

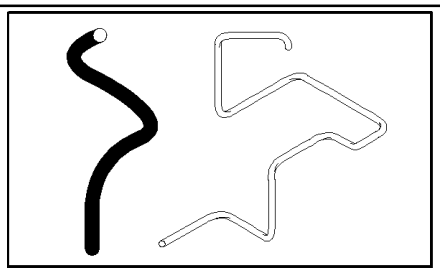

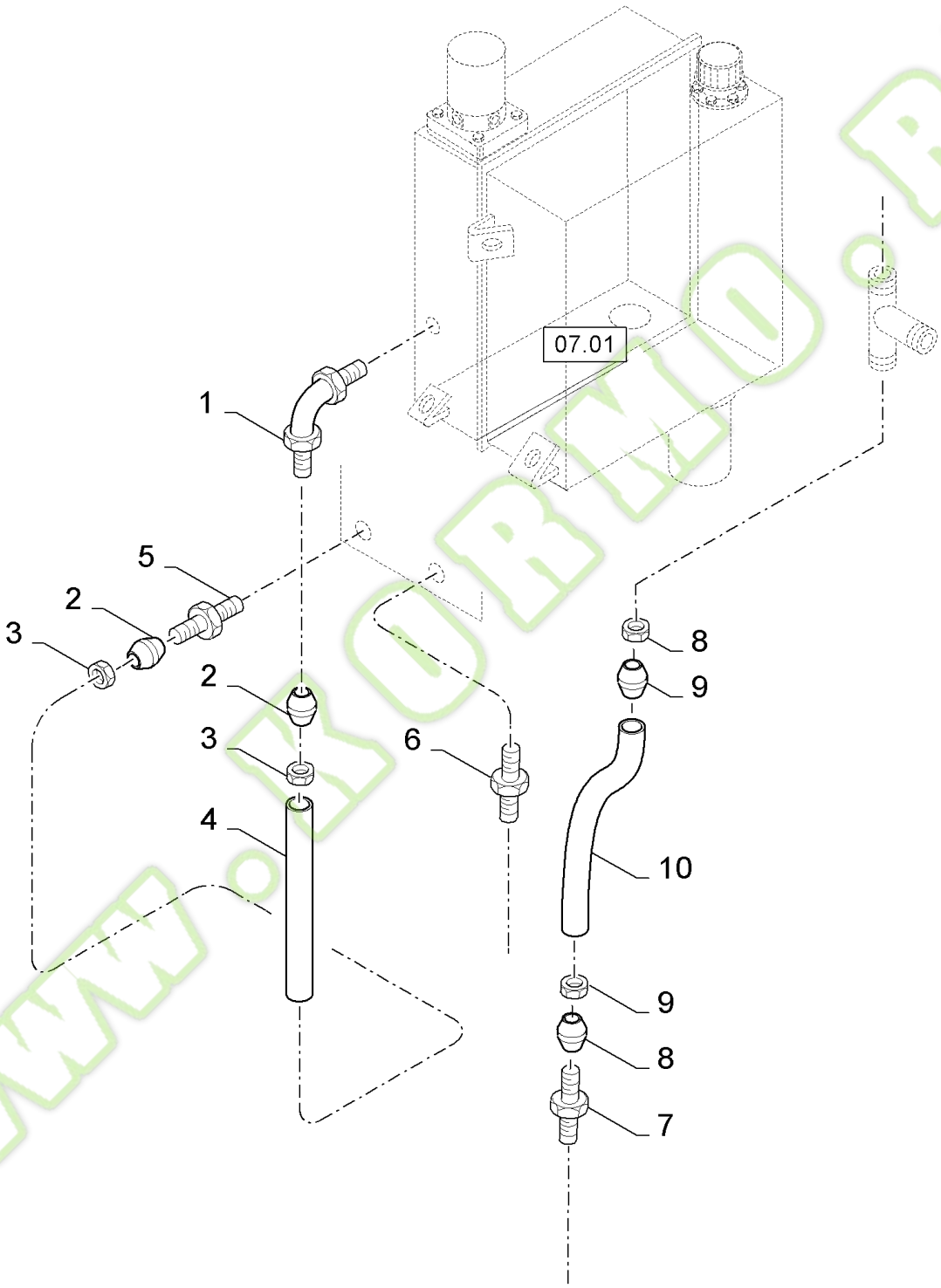

www.KOBMO.BY

FX50 SELF-PROPELLED FORAGE HARVESTER (10/02-)

07.29(01) HYDRAULIC LINES TO MAIN VALVE, WITHOUT CROP PROCESSOR

Ref	Part Number	Qty	Description
1	447770	1	CONNECTOR, HYD., {PP:80447770}
2	335168	AR	FERRULE, {PP:80335168} 18MM
3	335170	AR	NUT, {PP:80335170} M18
4	371534	AR	TUBE, RIGID, {PP:80371534} D=18MM
5	394373	1	CONNECTOR, HYD., {PP:80394373}
6	335174	1	CONNECTOR, HYD., {PP:80335174}
7	150017	1	CONNECTOR, HYD., {PP:80150017}
8	150014	AR	FERRULE, {PP:80150014} 10MM
9	100042	AR	NUT, {PP:80100042} M10
10	371539	AR	TUBE, RIGID, {PP:80371539} D=10MM

www.KOBMO.BY

07.30(01) HIGH PRESSURE FILTER

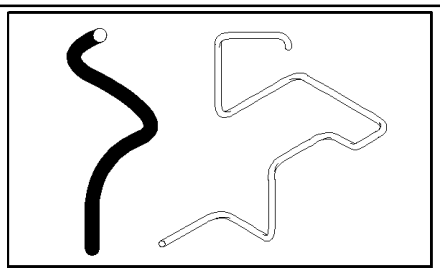

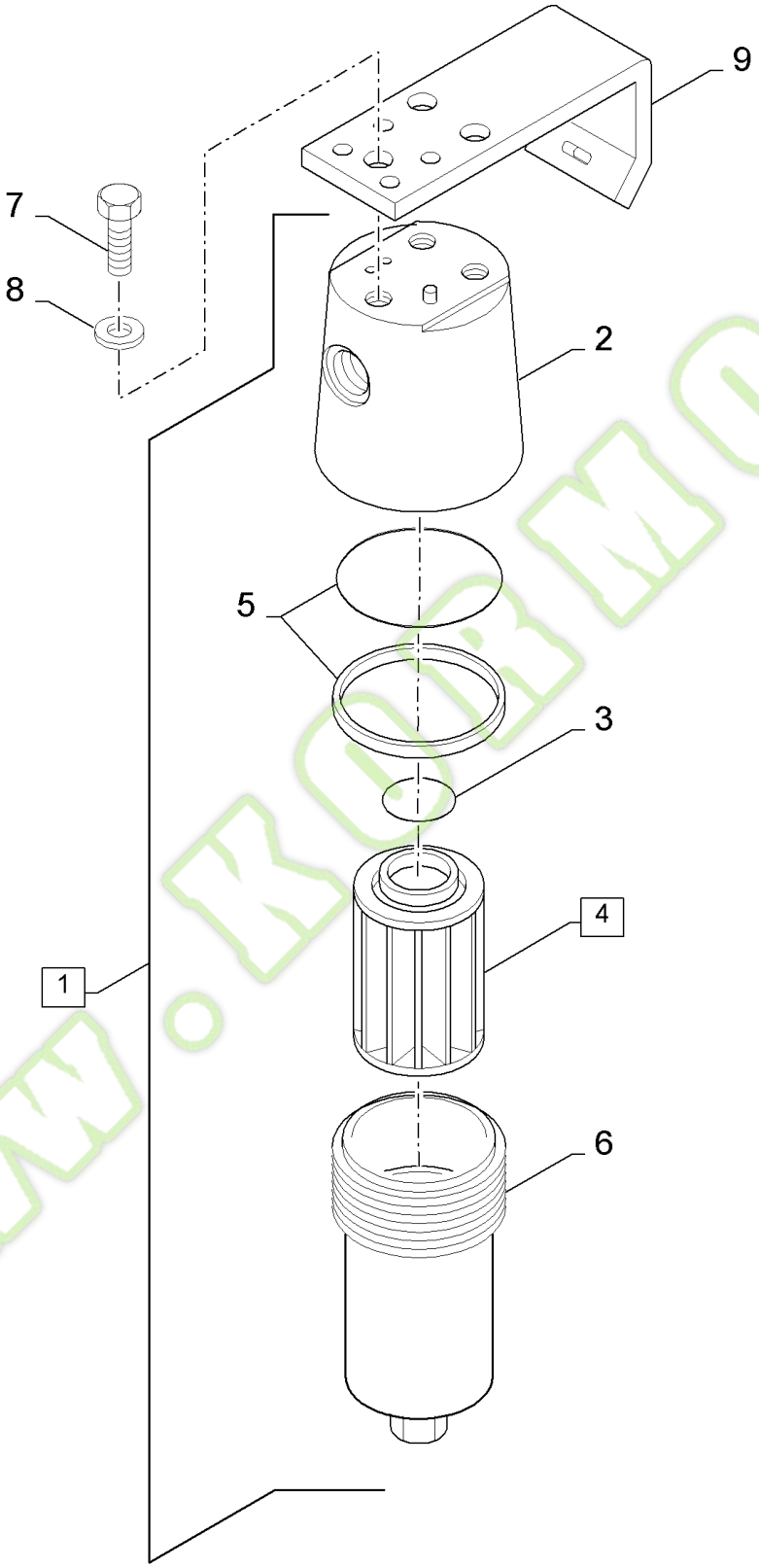

www.KOBMO.BY

FX50 SELF-PROPELLED FORAGE HARVESTER (10/02-)

07.30(01) HIGH PRESSURE FILTER

Ref	Part Number	Qty	Description
1	84000128	1	FILTER, HYDRAULIC OIL, (2 to 6)
2	NSS	1	NOT SERVICED SEPARATELY,
3	84032331	1	ELEMENT, SEALING,
4	84004451	1	FILTER, ELEMENT, (3), D=56MM L=102MM
4	84444543	1	FILTER, ELEMENT, , D=50MM L=112MM
5	84814697	1	KIT, SEALS, A=24
6	NSS	1	NOT SERVICED SEPARATELY,
8	322358	3	WASHER, LOCK, {PP:80322358} Belleville, M8, 8MM
9	84441551	1	SUPPORT,
7	16043224	3	SCREW, Hex, M8 x 16, 8.8, Full Thd, M8x16

WWW.KOBMO.BY

07.31(01) COMPENSATION VALVE AND "E.M.R." VALVE

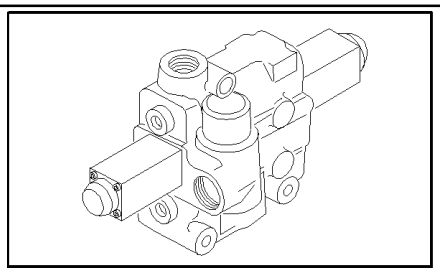

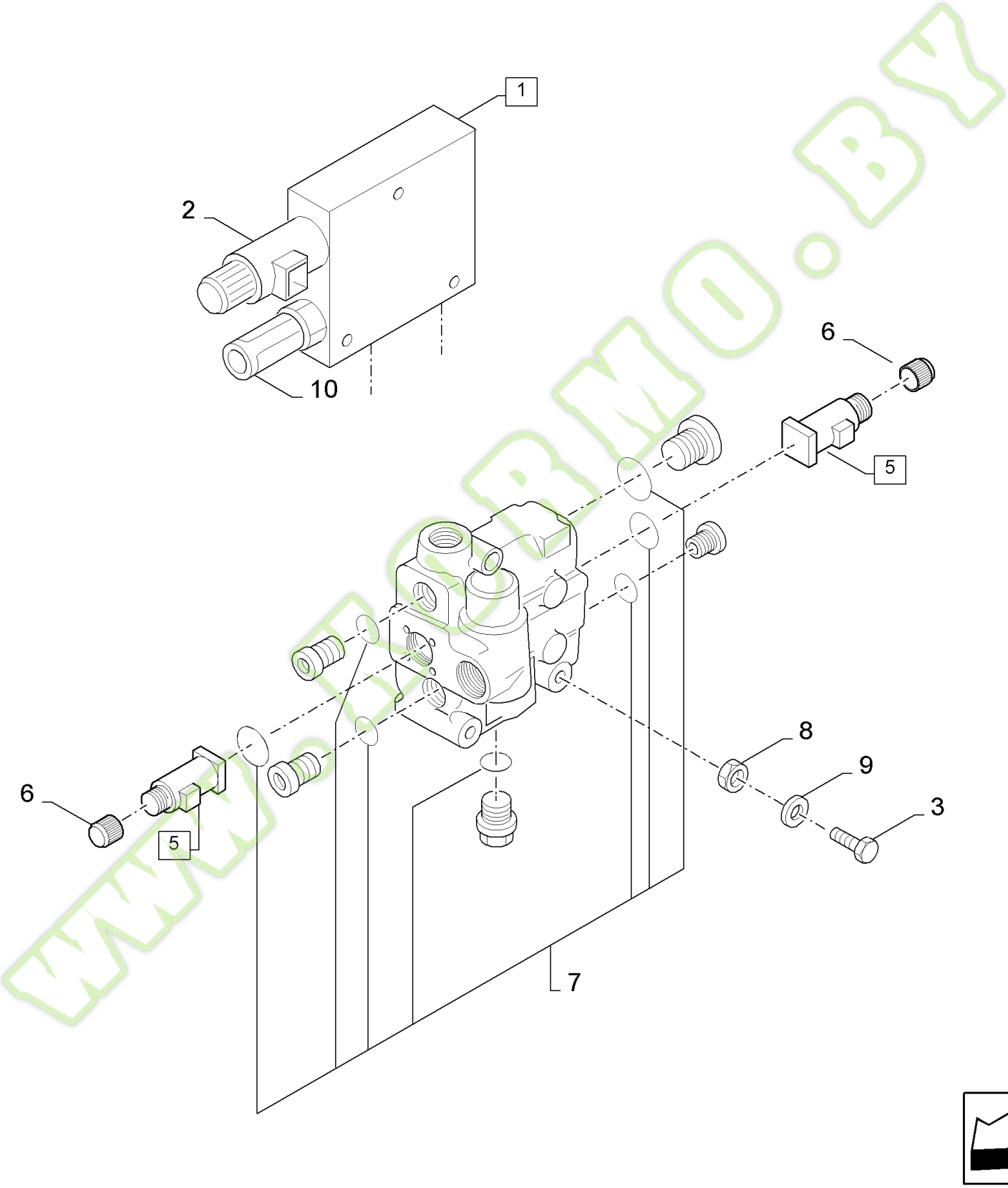

www.ЕСВМО.BY

FX50 SELF-PROPELLED FORAGE HARVESTER (10/02-)

07.31(01) COMPENSATION VALVE AND "E.M.R." VALVE

Ref	Part Number	Qty	Description
1	9831828	1	VALVE, HYDRAULIC, {PP:89831828} (2,10)
2	9831827	1	ELECTROMAGNET, {PP:89831827}
3	120063	3	SCREW, {PP:80120063} Hex, M8 x 80, 8.8, M8x80
4	84043954	1	VALVE, HYDRAULIC, (5 to 7)
5	84062114	2	ELECTROMAGNET, (6)
6	84429046	1	PROTECTION CAP,
7	84014429	1	KIT, SEALS,
8	89706690	3	NUT, CL 8, M8 x 1.25 x 13.0
9	322358	3	WASHER, LOCK, {PP:80322358} Belleville, M8, 8MM
10	84817017	1	SENSOR,

www.KOBMO.BY

07.32(01) SB12 VALVE, 5 FUNCTIONS

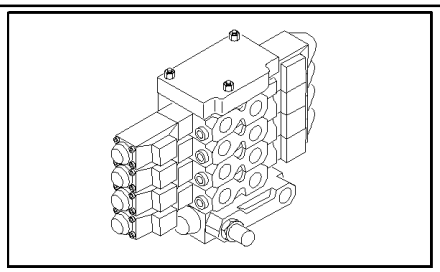

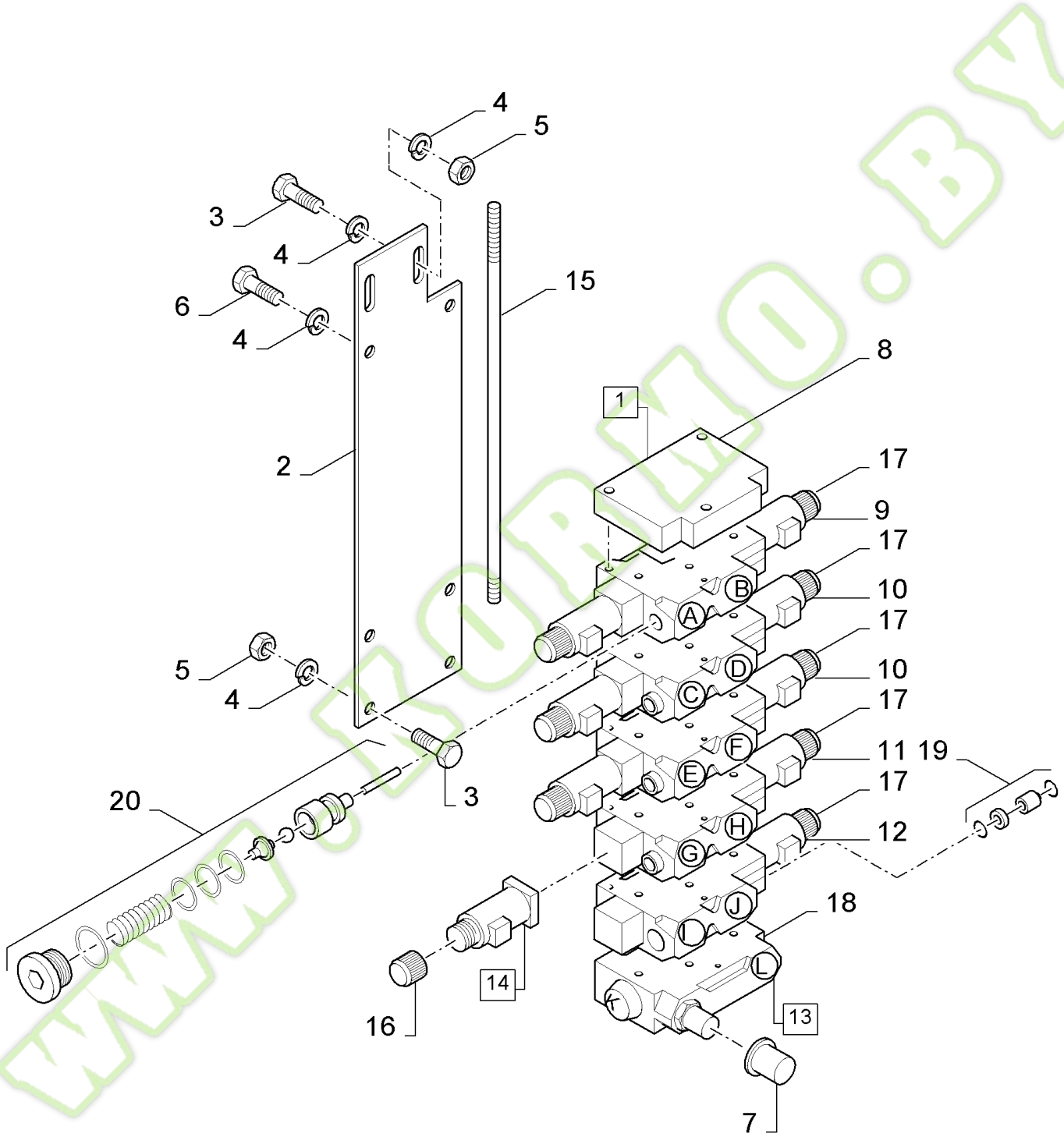

www.KORMO.BY

FX50 SELF-PROPELLED FORAGE HARVESTER (10/02-)

07.32(01) SB12 VALVE, 5 FUNCTIONS

Ref	Part Number	Qty	Description
1	84043951	1	VALVE, HYDRAULIC, (8 to 13)
2	84007583	1	SUPPORT,
3	120101	4	SCREW, {PP:80120101} Hex, M6 x 30, 8.8, Full Thd, M8x25
4	322358	9	WASHER, LOCK, {PP:80322358} Belleville, M8, 8MM
5	89706690	4	NUT, CL 8, M8 x 1.25 x 13.0
7	84042643	1	COVER, CAP,
8	84022625	1	VALVE, HYDRAULIC,
9	84053375	1	VALVE, HYDRAULIC, (14,17,19,20)
10	84053380	2	VALVE, HYDRAULIC, (14,17,19)
11	84053382	1	VALVE, HYDRAULIC, (14,17,19), PROPORTIONAL
12	84053383	1	VALVE, HYDRAULIC, (14,17,19)
13	84022626	1	VALVE SEAT, (18)
14	84062114	2	ELECTROMAGNET, Prop.(16)
14	84062113	7	ELECTROMAGNET, On/Off(16)
15	84320064	3	ROD, THREADED,
16	84429046	9	PROTECTION CAP,
17	84014433	5	KIT, SEALS, , INCLUDES ALSO SEALS BETWEEN VALVES
18	84014431	1	KIT, SEALS,
19	84014434	5	KIT, REPAIR,
20	84039229	1	KIT, REPAIR,
6	16043224	3	SCREW, Hex, M8 x 16, 8.8, Full Thd, M8x16

www.KOBMO.BY

07.33(01) SB12 VALVE, 4 FUNCTIONS

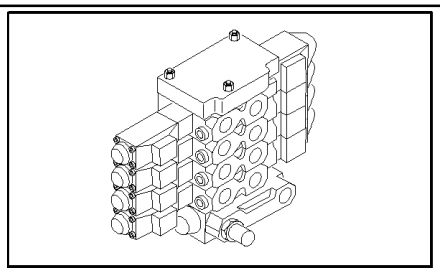

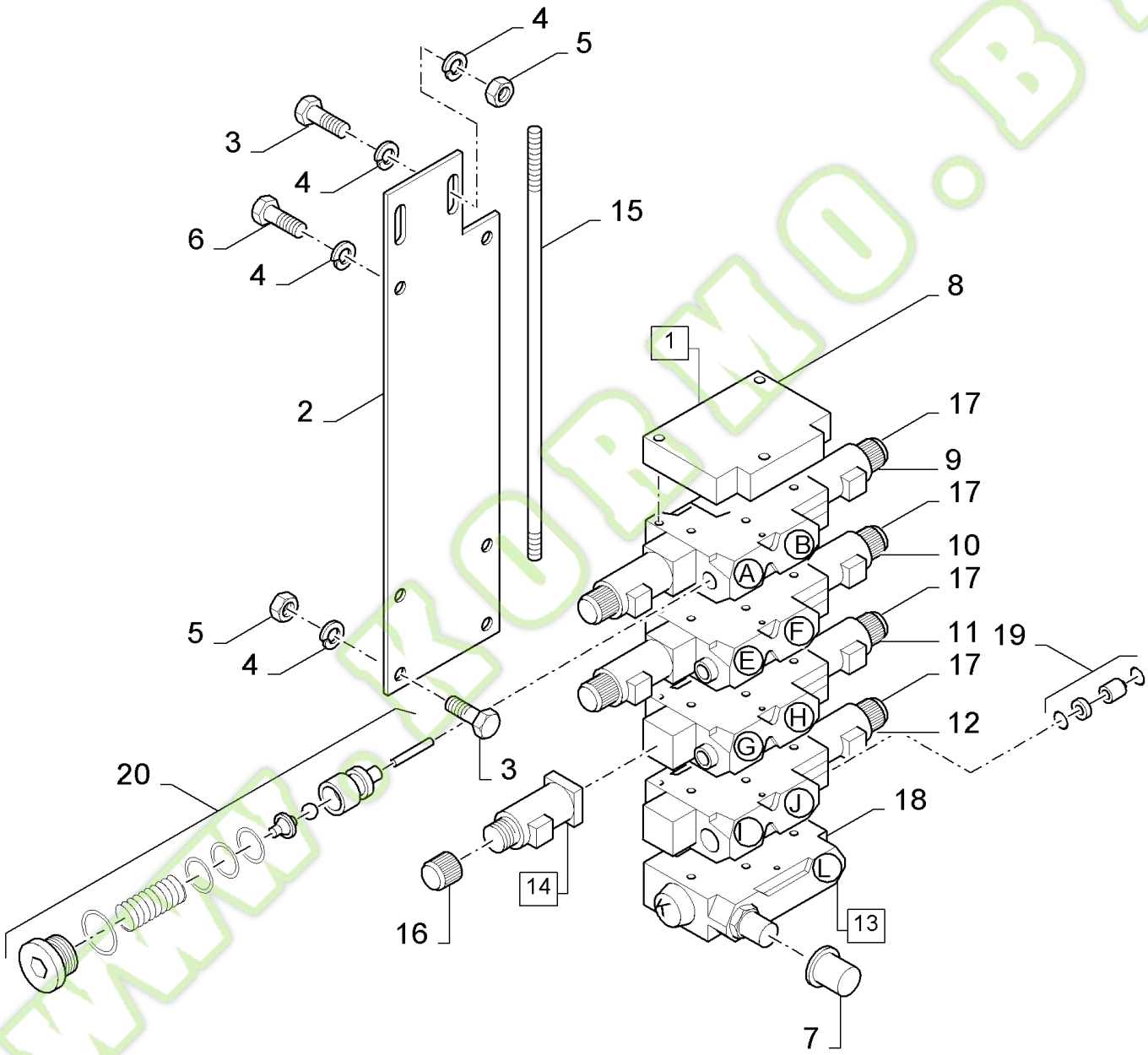

www.KOBMO.BY

FX50 SELF-PROPELLED FORAGE HARVESTER (10/02-)

07.33(01) SB12 VALVE, 4 FUNCTIONS

Ref	Part Number	Qty	Description
1	84043949	1	VALVE, HYDRAULIC, (8 to 13)
2	84007583	1	SUPPORT,
3	120101	4	SCREW, {PP:80120101} Hex, M6 x 30, 8.8, Full Thd, M8x25
4	322358	9	WASHER, LOCK, {PP:80322358} Belleville, M8, 8MM
5	89706690	4	NUT, CL 8, M8 x 1.25 x 13.0
7	84042643	1	COVER, CAP,
8	84022625	1	VALVE, HYDRAULIC,
9	84053375	1	VALVE, HYDRAULIC, (14,17,19,20)
10	84053380	1	VALVE, HYDRAULIC, (14,17,19)
11	84053382	1	VALVE, HYDRAULIC, (14,17,19), PROPORTIONAL
12	84053383	1	VALVE, HYDRAULIC, (14,17,19)
13	84022626	1	VALVE SEAT, (18)
14	84062114	2	ELECTROMAGNET, Prop(16)
14	84062113	5	ELECTROMAGNET, On/Off(16)
15	84320063	3	ROD, THREADED,
16	84429046	7	PROTECTION CAP,
17	84014433	4	KIT, SEALS, , INCLUDES ALSO SEALS BETWEEN VALVES
18	84014431	1	KIT, SEALS,
19	84014434	4	KIT, REPAIR,
20	84039229	1	KIT, REPAIR,
6	16043224	3	SCREW, Hex, M8 x 16, 8.8, Full Thd, M8x16

www.KOBMO.BY

07.34(01) SB12 VALVE, 6 FUNCTIONS, CROP PRO PLUS TM

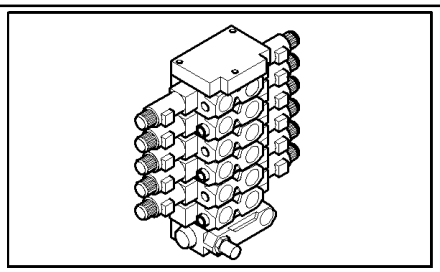

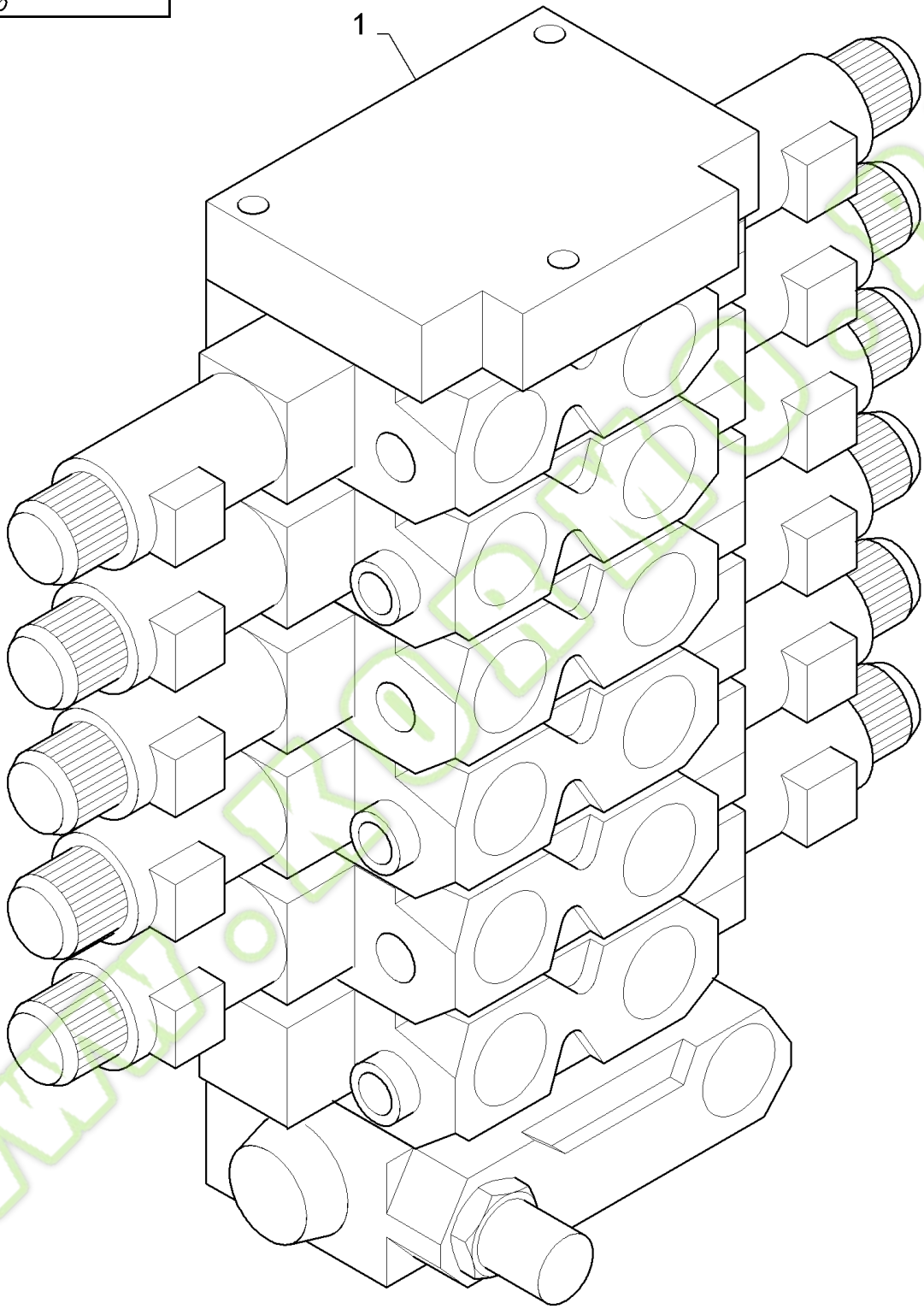

FX50 SELF-PROPELLED FORAGE HARVESTER (10/02-)

07.34(01) SB12 VALVE, 6 FUNCTIONS, CROP PRO PLUS TM

Ref	Part Number	Qty	Description
1	84441443	1	VALVE, HYDRAULIC,

www.KOBMO.BY

07.35(01) HYDRAULICS FOR HIGH CAPACITY AND TANK

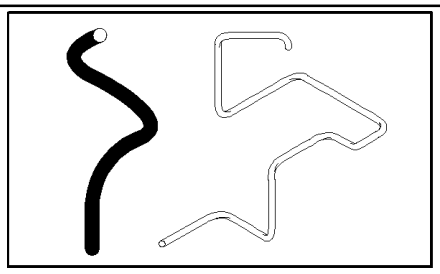

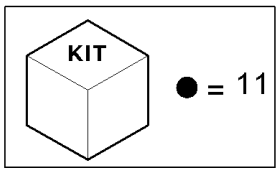

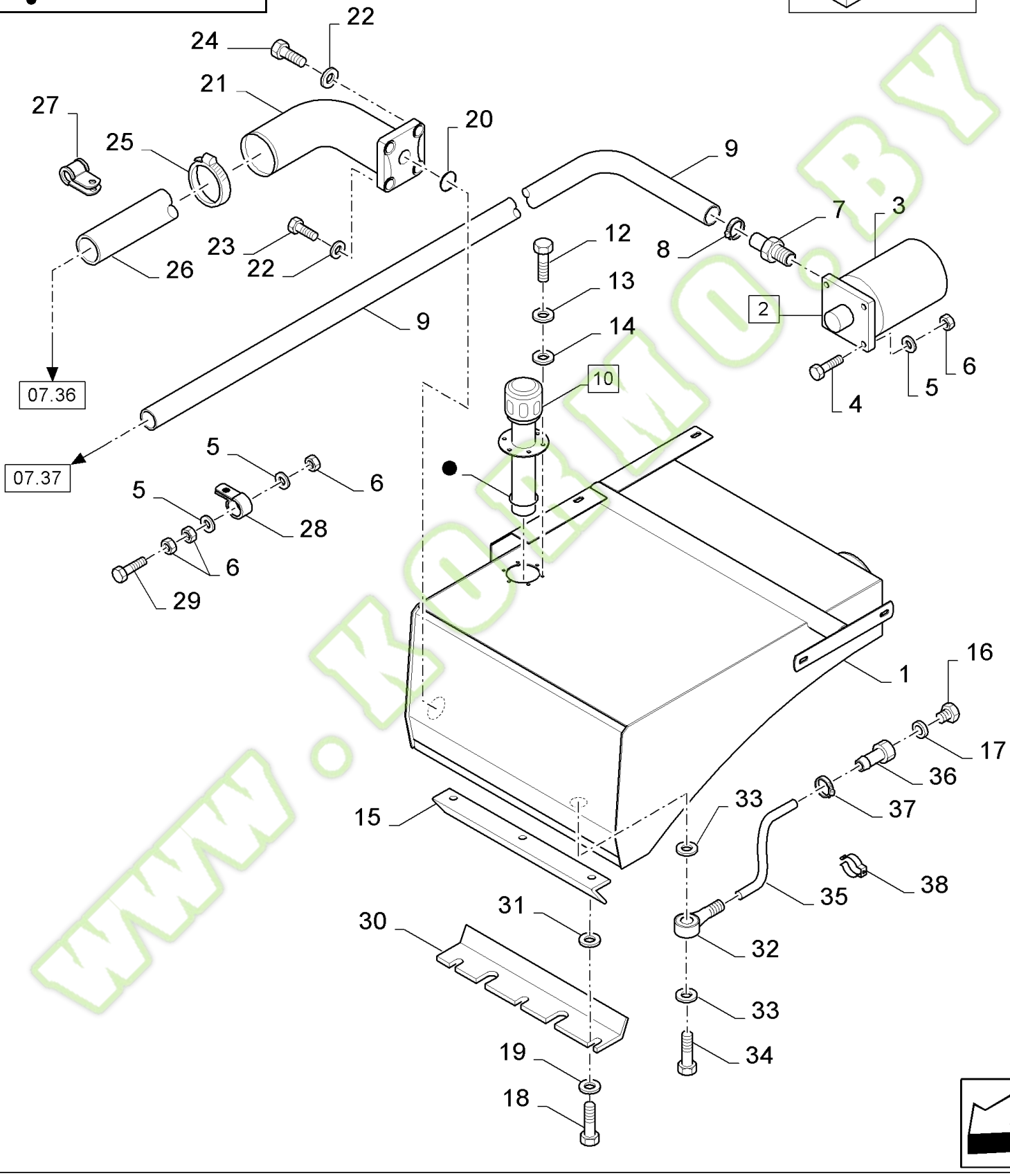

www.KOMOBY

FX50 SELF-PROPELLED FORAGE HARVESTER (10/02-)

07.35(01) HYDRAULICS FOR HIGH CAPACITY AND TANK

Ref	Part Number	Qty	Description
1	84817097	1	RESERVOIR, HYDRAULIC OIL,
2	84038051	1	FILTER, ENGINE OIL, (3)
3	9814477	1	FILTER, ELEMENT, {PP:89814477}
4	43127	4	BOLT, {PP:80043127} Hex, M8 x 25, 8.8, Cap, HH, CL 8.8, M8 x 1.25 x 25
5	322358	AR	WASHER, LOCK, {PP:80322358} Belleville, M8, 8MM
6	89706690	7	NUT, CL 8, M8 x 1.25 x 13.0
7	457417	1	CONNECTOR, HYD., {PP:80457417}
8	382527	1	CLAMP, {PP:80382527}
9	84036291	1	HOSE, FLEXIBLE,
10	84036281	1	DIPSTICK, (11)
11	84037210	1	KIT, SEALS,
12	120098	6	SCREW, {PP:80120098} Hex, M5 x 20, 8.8, Full Thd, M5x20
13	322356	6	WASHER, LOCK, {PP:80322356} 5MM
14	373817	6	ELEMENT, SEALING, {PP:80373817}
15	84817096	1	SUPPORT,
16	150060	1	PLUG, {PP:80150060}
17	9511034	1	GASKET, {PP:89511034}
18	80412256	3	SCREW, M10x25
19	140045	3	WASHER, LOCK, {PP:80140045} Belleville, M10, 10MM
20	167266	1	O-RING, {PP:80167266} 12-1, 90 Duro, .924 ID x .116" Thk, 90 Duro, .924" ID x .116" Thk
21	89817438	1	FLANGE,
22	140044	4	WASHER, {PP:80140044}
23	120229	2	SCREW, {PP:80120229} Hex Soc Hd, M6 x 20, 8.8, M6x20
24	356464	2	SCREW, {PP:80356464} M6x50
25	382528	1	CLAMP, {PP:80382528}
26	84032977	1	HOSE, FLEXIBLE, , FOR FX60 ONLY
26	84442404	1	HOSE, FLEXIBLE, , FOR FX30-40-50 ONLY
27	455556	AR	CLAMP, {PP:80455556} 1-1/4"
28	9513271	AR	CLAMP, {PP:89513271} 1"
29	120106	1	SCREW, {PP:80120106} Hex, M8 x 40, 8.8, Full Thd, Hex, M8 x 40, 8.8, Full Thd
30	84062053	1	PLATE,
31	140042	3	WASHER, LOCK, {PP:80140042} M10 x 34 x 3,
32	80326078	1	CONNECTOR, HYD.,
33	220122	2	GASKET, {PP:80220122} , BSN C317
33	9511034	2	GASKET, {PP:89511034} , ASN D318
34	120258	1	SCREW, HOLLOW, {PP:80120258} , BSN C317
34	84100235	1	SCREW, HOLLOW, , ASN D318
35	9516094	AR	HOSE, {PP:89516094} L=2M, 24MM
36	80326079	AR	CONNECTOR, HYD.,
37	326082	AR	CLAMP, {PP:80326082}
38	9511662	2	CLAMP, {PP:89511662}

CLUB.SUBARU.BY

07.36(01) HIGH CAPACITY HYDRAULICS, VALVES AND LINES

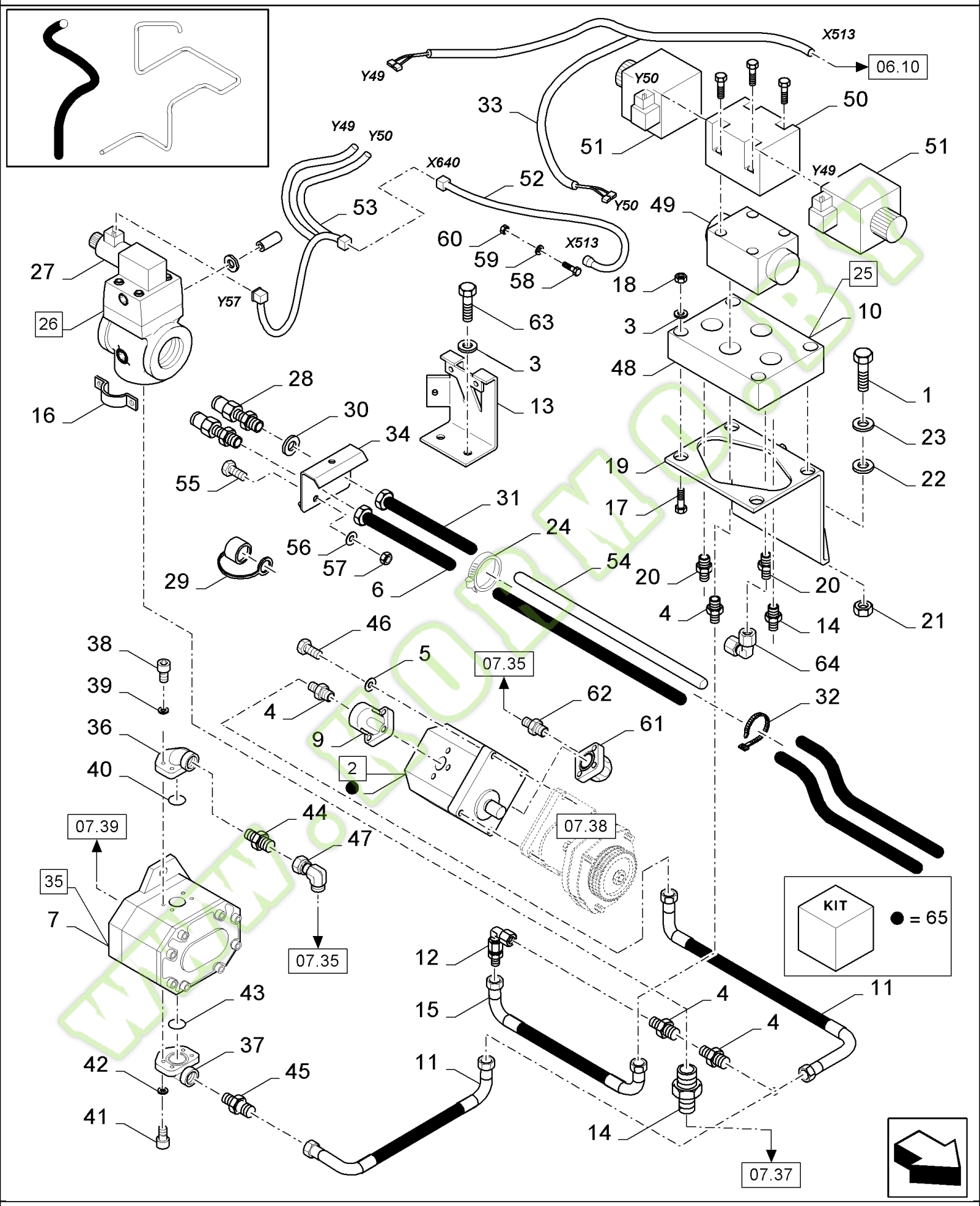

FX50 SELF-PROPELLED FORAGE HARVESTER (10/02-)

07.36(01) HIGH CAPACITY HYDRAULICS, VALVES AND LINES

Ref	Part Number	Qty	Description
1	43168	1	SCREW, {PP:80043168} Hex, M16 x 40, 8.8, Hex, M16 x 40, 8.8
2	84031793	1	PUMP, ENGINE OIL, (65)
3	140045	AR	WASHER, LOCK, {PP:80140045} Belleville, M10, 10MM
4	84036285	4	CONNECTOR, HYD.,
5	84442155	3	SCREW, M12x35
6	84440644	1	HOSE, FLEXIBLE,
7	84062560	1	KIT, SEALS, , FOR FX60 ONLY
9	89813318	1	CONNECTOR, HYD., , FOR FX30-40-50 ONLY
10	84037439	1	KIT, SEALS,
11	84440645	1	HOSE, FLEXIBLE, , FOR FX30-40-50 ONLY
11	84442059	1	HOSE, FLEXIBLE, , FOR FX60 ONLY
12	84032976	1	ELBOW,
13	84442071	1	SUPPORT,
14	84036286	2	CONNECTOR, HYD.,
15	84442351	1	HOSE, FLEXIBLE,
16	84041020	1	CLAMP,
17	84015950	4	SCREW, M10x50
18	100016	6	NUT, {PP:80100016} M10, Cl 8, M10
19	84442069	1	SUPPORT,
20	89835290	2	CONNECTOR, HYD.,
21	100020	1	NUT, {PP:80100020} M16, Cl 8, M16, Cl 8
22	140048	1	WASHER, LOCK, {PP:80140048} Belleville, M16, 16MM
23	378246	1	WASHER, {PP:80378246} 16MM
24	9513271	AR	CLAMP, {PP:89513271}
25	84069154	1	VALVE, HYDRAULIC, (48 to 51)
26	84039549	1	VALVE, HYDRAULIC, (27), NOT FOR NA
26	84031797	1	VALVE, HYDRAULIC, (27), FOR NA ONLY
27	84037412	1	KIT, SEALS,
28	84032982	2	COUPLING, QUICK, MALE,
29	266220	2	DUST CAP, {PP:80266220}
30	36622	2	WASHER, {PP:80036622}
31	84440643	1	HOSE, FLEXIBLE,
32	396718	1	STRAP, {PP:80396718}
33	84035515	1	HARNESS, WIRE, , NOT FOR NA, FOR FX30-40-50 ONLY
33	84057935	1	HARNESS, WIRE, , NOT FOR NA, FOR FX60 ONLY
34	84442056	1	BRACKET,
35	84056943	1	PUMP, HYDRAULIC, (7), FOR FX60 ONLY
35	84045760	1	PUMP, HYDRAULIC, (7), FOR NA ONLY, FOR FX60 ONLY
36	84045769	1	FLANGE, , FOR FX60 ONLY
37	84045768	1	FLANGE, , FOR FX60 ONLY
38	84062556	4	SCREW, , FOR FX60 ONLY
39	84062558	4	WASHER, 7/16", FOR FX60 ONLY
40	84062579	1	O-RING, , FOR FX60 ONLY
41	84062557	4	SCREW, , FOR FX60 ONLY
42	84062559	4	WASHER, 3/8", FOR FX60 ONLY

EMD-KOEMO.BY

Ref	Part Number	Qty	Description
43	84062578	1	O-RING, , FOR FX60 ONLY
44	84057528	1	CONNECTOR, HYD., , FOR FX60 ONLY
45	84057606	1	CONNECTOR, HYD., , FOR FX60 ONLY
46	300913	3	WASHER, LOCK, {PP:80300913} , FOR FX30-40-50 ONLY
47	84045770	1	CONNECTOR, HYD., , FOR FX60 ONLY
48	84031800	1	PLATE,
49	84031799	1	VALVE, HYDRAULIC,
50	84069153	1	VALVE, HYDRAULIC,
51	84037440	2	ELECTROMAGNET,
52	84439764	1	HARNESS, WIRE, , FOR NA ONLY, FOR FX30-40-50 ONLY
52	84057923	1	HARNESS, WIRE, , FOR NA ONLY, FOR FX60 ONLY
53	84057921	1	HARNESS, WIRE, , FOR NA ONLY, FOR FX60 ONLY
53	84002760	1	HARNESS, WIRE, , FOR NA ONLY, FOR FX30-40-50 ONLY
54	NS	1	NOT SERVICED, TUBE
55	43127	AR	BOLT, {PP:80043127} Hex, M8 x 25, 8.8, Cap, HH, CL 8.8, M8 x 1.25 x 25
56	322358	AR	WASHER, LOCK, {PP:80322358} Belleville, M8, 8MM
57	89706690	AR	NUT, CL 8, M8 x 1.25 x 13.0
58	86511816	4	SCREW, Cross Pan Hd, M3 x 16, M3x16, NOT FOR NA
59	412547	4	WASHER, LOCK, {PP:80412547} Serr, M3, 3,2MM, NOT FOR NA
60	86508812	4	NUT, M3, Cl 8, M3, NOT FOR NA
61	84031794	1	FLANGE, , FOR FX30-40-50 ONLY
62	84036282	1	CONNECTOR, HYD., , FOR FX30-40-50 ONLY
63	43140	4	BOLT, {PP:80043140} Hex, M10 x 30, 8.8, M10x30
64	447770	1	CONNECTOR, HYD., {PP:80447770}
65	84036983	1	KIT, SEALS,

www.KOMO.BY

07.37(01) HIGH CAPACITY HYDRAULICS, VALVES AND LINES

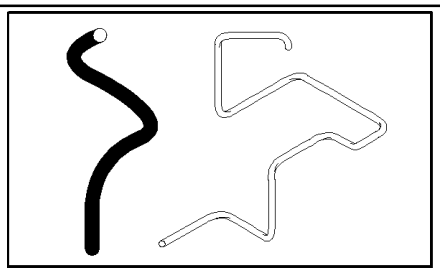

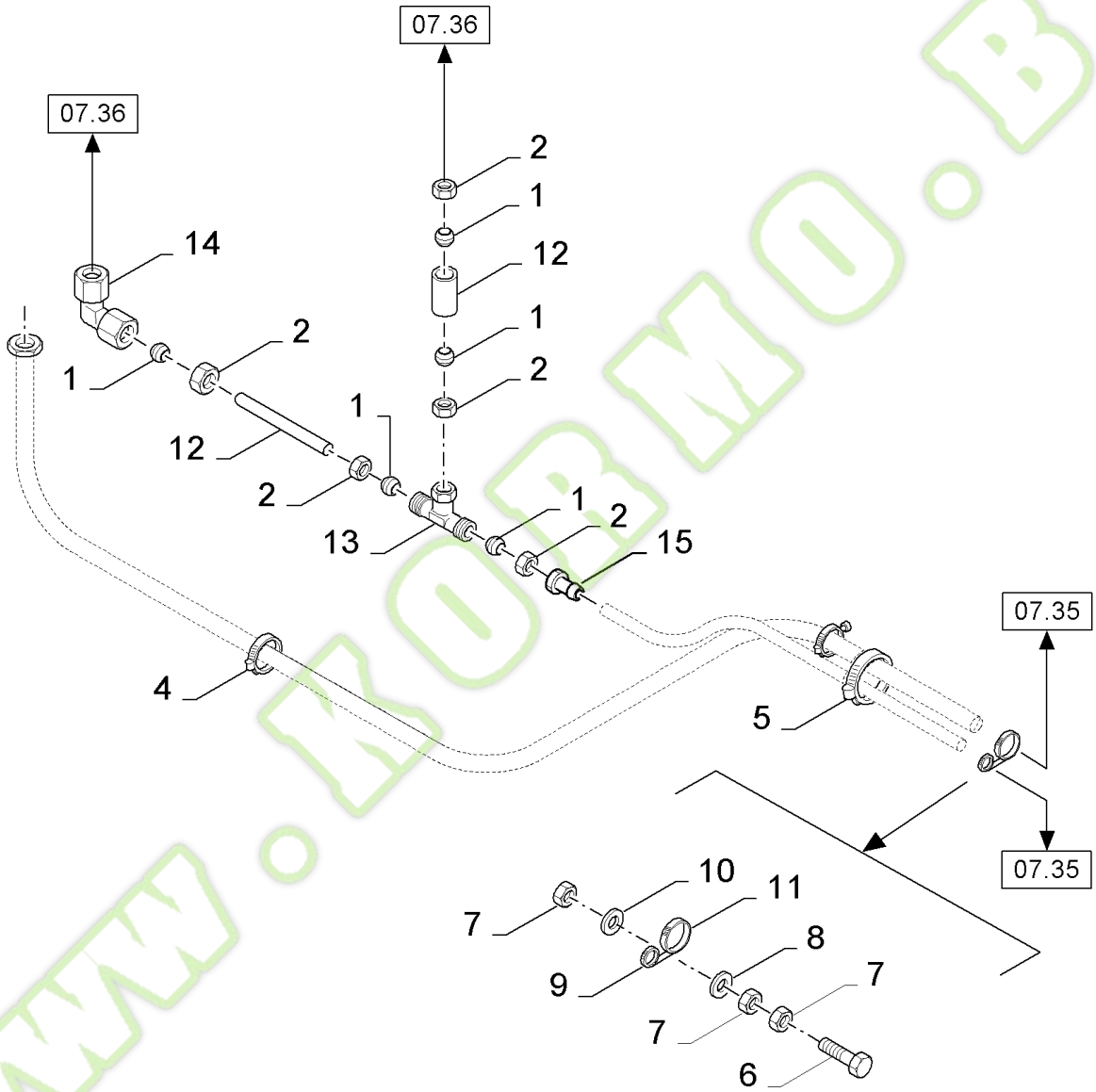

www.KOBMO.BY

FX50 SELF-PROPELLED FORAGE HARVESTER (10/02-)

07.37(01) HIGH CAPACITY HYDRAULICS, VALVES AND LINES

Ref	Part Number	Qty	Description
1	412528	AR	FERRULE, {PP:80412528} 28MM
2	412527	AR	NUT, {PP:80412527} M28
4	514920	1	CLAMP, {PP:80514920}
5	396718	1	STRAP, {PP:80396718}
6	412559	2	SCREW, {PP:80412559} Hex, M6 x 50, 8.8, Full Thd, M6x50
7	9706755	AR	NUT, {PP:89706755} M6, Cl 8, M6
8	140040	5	WASHER, {PP:80140040} M6 x 22 x 2,
9	9513271	1	CLAMP, {PP:89513271} 1"
10	322357	5	WASHER, LOCK, {PP:80322357} Belleville, M6, Belleville, M6
11	455556	1	CLAMP, {PP:80455556} 1-1/4"
12	9811333	2	TUBE, RIGID, {PP:89811333} 28MM, 2M
13	9507672	1	CONNECTION, 3 WAY, {PP:89507672}
14	457573	1	ELBOW, {PP:80457573}
15	457544	1	CONNECTOR, HYD., {PP:80457544}

www.KOBMO.BY

07.38(01) TRANSMISSION HOUSING

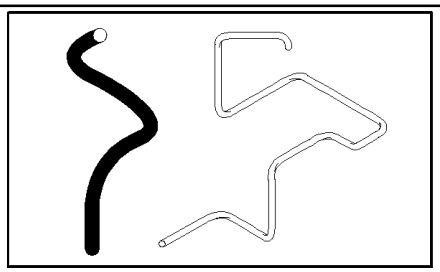

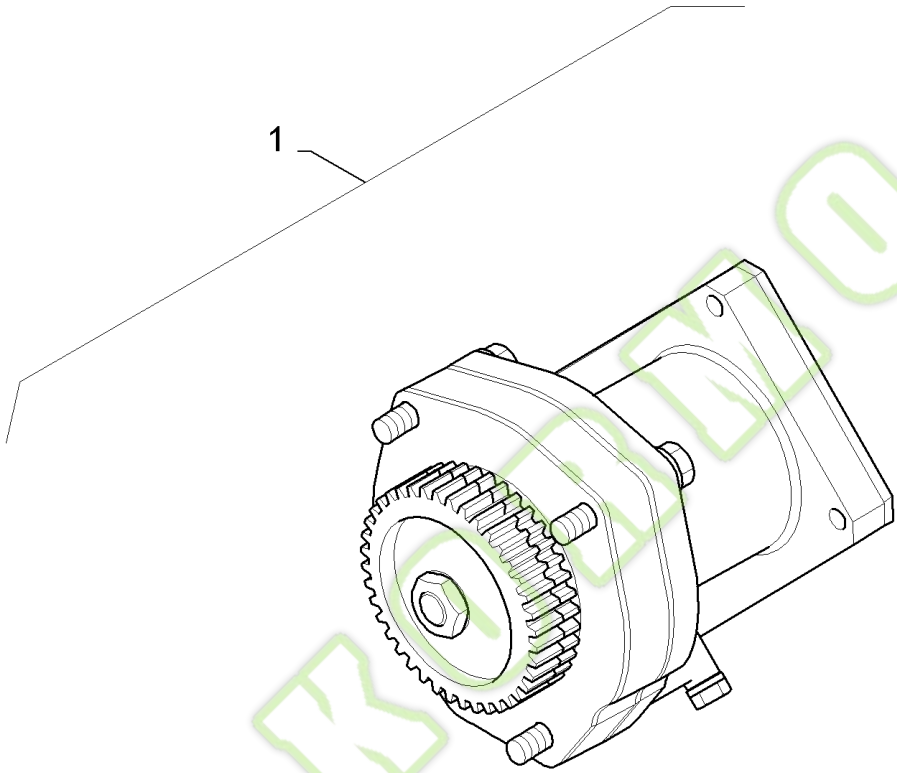

www.KOMO.BY

FX50 SELF-PROPELLED FORAGE HARVESTER (10/02-)

07.38(01) TRANSMISSION HOUSING

Ref	Part Number	Qty	Description
1	84452061	1	BLOCK, CONNECTING,

www.KOBMO.BY

07.40(01) CROP PRO PLUS TM, HYDRAULICS ON BASE MACHINE FOR CYLINDER (HYDRO DRIVE VERSION)

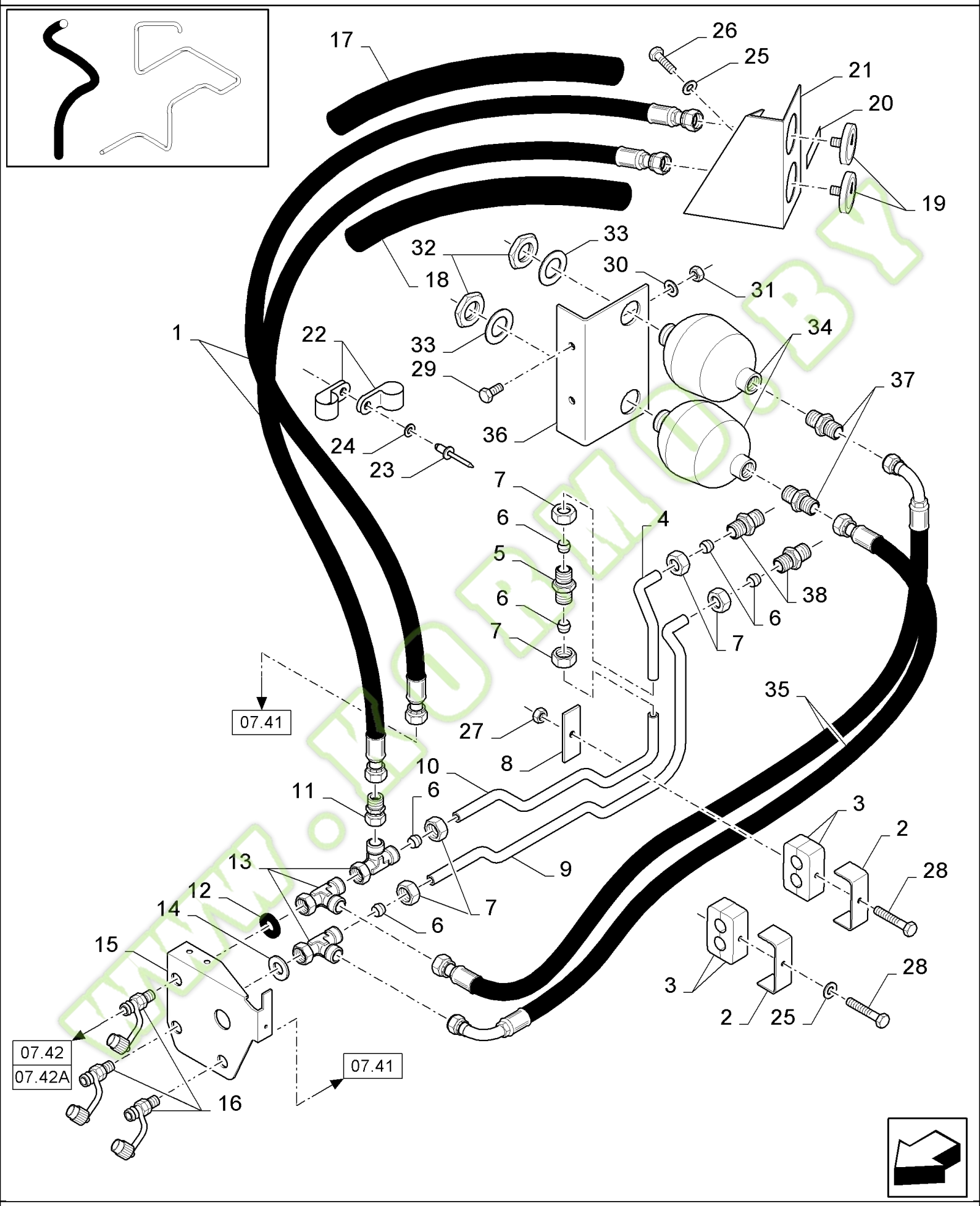

FX50 SELF-PROPELLED FORAGE HARVESTER (10/02-)

07.40(01) CROP PRO PLUS TM, HYDRAULICS ON BASE MACHINE FOR CYLINDER (HYDRO DRIVE VERSION)

Ref	Part Number	Qty	Description
1	84100169	2	HOSE, FLEXIBLE,
2	431941	2	SUPPORT, {PP:80431941}
3	430357	4	CLAMP, {PP:80430357}
4	84440830	1	TUBE, HYD,
5	335172	1	CONNECTOR, HYD., {PP:80335172}
6	335136	AR	FERRULE, {PP:80335136} 8MM
7	335135	AR	NUT, {PP:80335135} M8
8	434097	1	BRACKET, {PP:80434097}
9	84440832	1	TUBE, HYD,
10	84440835	1	TUBE, HYD,
11	84431481	1	CONNECTOR, HYD.,
12	747812	1	WASHER, {PP:80747812}
13	84064562	3	CONNECTOR, HYD.,
14	747811	1	WASHER, {PP:80747811}
15	84443780	1	SUPPORT,
16	456017	3	COUPLING, QUICK, MALE, {PP:80456017}
17	84607371	1	SHEATH, FLEXIBLE,
18	84806687	1	SHEATH, FLEXIBLE,
19	9513115	2	INSTRUMENT, MEASURING, {PP:89513115}
20	84431498	1	DECAL,
21	84431490	1	SUPPORT,
22	9507808	2	CLAMP, {PP:89507808}
23	NS	1	NOT SERVICED,
24	140182	1	WASHER, {PP:80140182} M5 x 18 x 2, DIA. 5.5MM
25	322357	3	WASHER, LOCK, {PP:80322357} Belleville, M6, Belleville, M6
26	86508568	2	SCREW, Hex, M6 x 16, 8.8, M16x16
27	412152	1	NUT, {PP:80412152} M6 x 1, Cl 8.8, M16
28	80043118	2	SCREW, M6x40
29	43128	2	SCREW, {PP:80043128} Hex, M8 x 30, 8.8, M8x25
30	322358	2	WASHER, LOCK, {PP:80322358} Belleville, M8, DIA. 8MM
31	89706690	2	NUT, M8
32	308823	2	NUT, {PP:80308823} M28 x 1.5, Cl 8, M28
33	140110	2	WASHER, {PP:80140110} DIA. 28MM
34	84018412	2	ACCUMULATOR,
35	84446090	2	HOSE, FLEXIBLE,
36	84447003	1	SUPPORT,
37	386215	2	CONNECTOR, HYD., {PP:80386215}
38	386215	2	CONNECTOR, HYD., {PP:80386215} , BSN C333
38	396162	2	CONNECTOR, HYD., {PP:80396162} , ASN D334

WWW.KUBMO.BY

07.41(01) CROP PRO PLUS TM, HYDRAULICS ON BASE MACHINE FOR HYDRO ENGINE

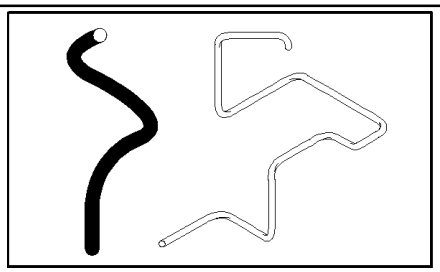

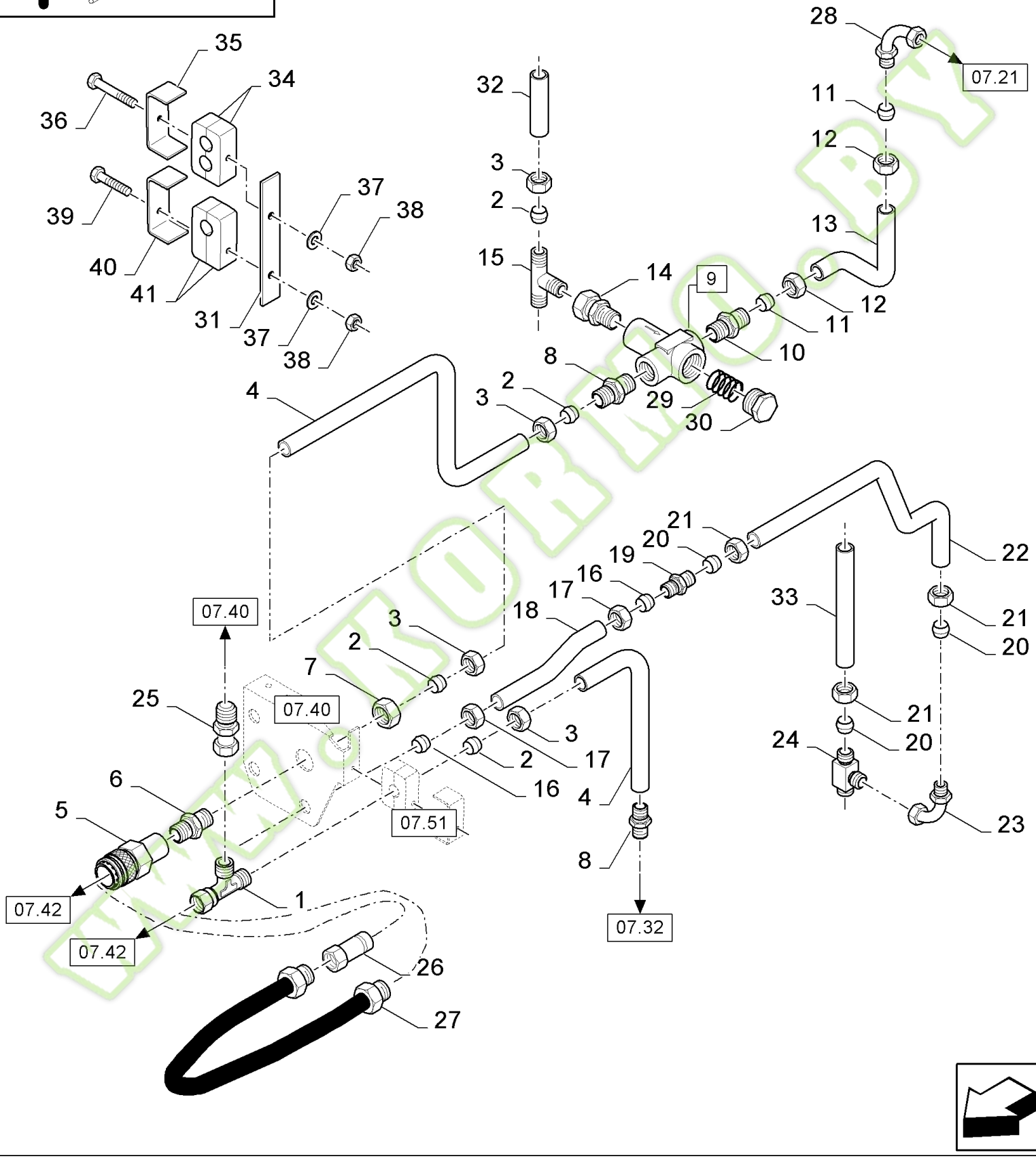

FX50 SELF-PROPELLED FORAGE HARVESTER (10/02-)

07.41(01) CROP PRO PLUS TM, HYDRAULICS ON BASE MACHINE FOR HYDRO ENGINE

Ref	Part Number	Qty	Description
1	84042903	1	CONNECTOR, HYD.,
2	335169	AR	FERRULE, {PP:80335169} 16MM
3	335171	AR	NUT, {PP:80335171} M16
4	84437325	1	TUBE, HYD,
5	772731	1	COUPLING, QUICK, FEMALE, {PP:80772731}
6	9513143	1	CONNECTOR, HYD., {PP:89513143}
7	100033	1	NUT, {PP:80100033} Thin, M24 x 1.5, Cl 04, M24
8	394372	2	CONNECTOR, HYD., {PP:80394372}
9	9513728	1	VALVE, PRESSURE RELIEF, {PP:89513728} (29,30)
10	394373	1	CONNECTOR, HYD., {PP:80394373}
11	335168	AR	FERRULE, {PP:80335168} 18MM
12	335170	AR	NUT, {PP:80335170} M18
13	84435144	1	TUBE, HYD,
14	84000316	1	CONNECTOR, HYD.,
15	444325	1	CONNECTION, 3 WAY, {PP:80444325}
16	335136	AR	FERRULE, {PP:80335136} 8MM
17	335135	AR	NUT, {PP:80335135} M8
18	84431942	1	TUBE, HYD,
19	9509282	1	CONNECTOR, HYD., {PP:89509282}
20	150014	AR	FERRULE, {PP:80150014} 10MM
21	86548975	AR	NUT, M10
22	84431939	1	TUBE, HYD,
23	418284	1	ELBOW, {PP:80418284}
24	395472	1	CONNECTION, 3 WAY, {PP:80395472}
25	84431521	1	CONNECTOR, HYD.,
26	86544945	1	COUPLING, QUICK, MALE,
27	84431525	1	HOSE, FLEXIBLE,
28	447770	1	CONNECTOR, HYD., {PP:80447770}
29	9813875	1	SPRING, {PP:89813875}
30	417006	1	PLUG, {PP:80417006}
31	84432230	1	BRACKET,
32	84429997	1	TUBE, HYD,
33	84432318	1	TUBE, HYD,
34	430356	2	CLAMP, {PP:80430356}
35	84814948	1	SUPPORT,
36	86508570	1	BOLT, Hex, M6 x 80, 8.8, M6x80
37	86588450	2	WASHER, M6, 6MM
38	412152	2	NUT, {PP:80412152} M6 x 1, Cl 8.8, M6
39	80043118	1	SCREW, M6x40
40	433101	1	SUPPORT, {PP:80433101}
41	433008	2	CLAMP, {PP:80433008}

LAND.BUBMO.BY

07.42(01) CROP PRO PLUS TM, HYDRAULICS ON CROP PRO PLUS (HYDRO DRIVE VERSION)

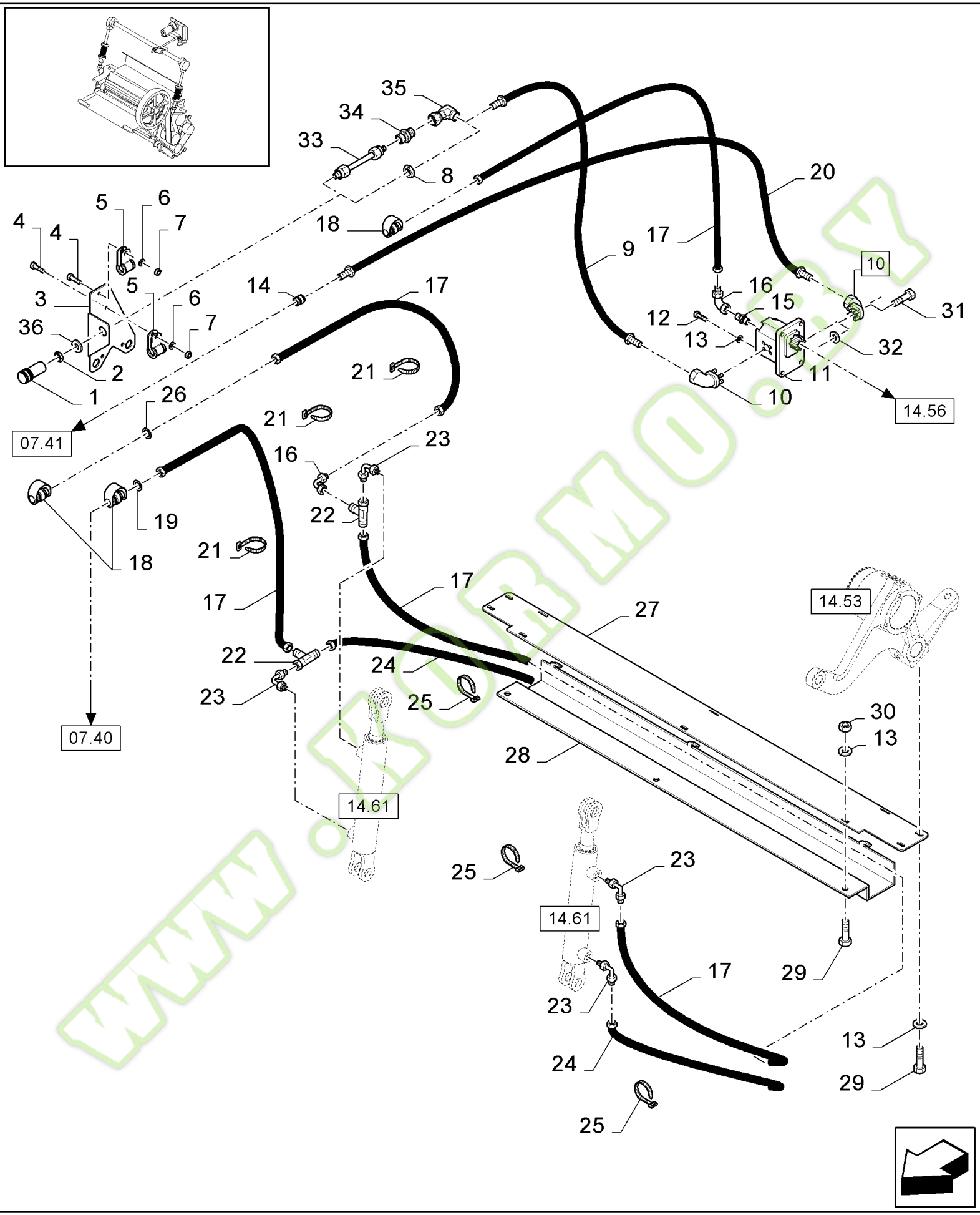

FX50 SELF-PROPELLED FORAGE HARVESTER (10/02-)

07.42(01) CROP PRO PLUS TM, HYDRAULICS ON CROP PRO PLUS (HYDRO DRIVE VERSION)

Ref	Part Number	Qty	Description
1	772731	1	COUPLING, QUICK, FEMALE, {PP:80772731}
2	9513143	1	CONNECTOR, HYD., {PP:89513143}
3	84431461	1	SUPPORT,
4	43117	2	SCREW, {PP:80043117} Hex, M6 x 30, 8.8, M6x30
5	418407	2	CLAMP, {PP:80418407}
6	322357	2	WASHER, LOCK, {PP:80322357} Belleville, M6, Belleville, M6
7	9706755	2	NUT, {PP:89706755} M6, Cl 8, M6
8	100033	1	NUT, {PP:80100033} Thin, M24 x 1.5, Cl 04,
9	84431293	1	HOSE, FLEXIBLE,
10	84068714	2	CONNECTOR, HYD.,
11	84074003	1	MOTOR, HYDRAULIC,
12	43127	4	BOLT, {PP:80043127} Hex, M8 x 25, 8.8, Cap, HH, CL 8.8, M8 x 1.25 x 25
13	322358	11	WASHER, LOCK, {PP:80322358} Belleville, M8, 8MM
14	86544945	1	COUPLING, QUICK, MALE,
15	84037257	1	CONNECTOR, HYD.,
16	418283	2	ELBOW, {PP:80418283}
17	84431386	4	HOSE, FLEXIBLE,
18	456012	3	COUPLING, QUICK, MALE, {PP:80456012}
19	747811	1	WASHER, {PP:80747811}
20	84071242	1	HOSE, FLEXIBLE,
21	396718	5	STRAP, {PP:80396718}
22	84064562	2	CONNECTOR, HYD.,
23	84018535	4	ELBOW,
24	84431376	1	HOSE, FLEXIBLE,
25	323597	3	STRAP, {PP:80323597}
26	747812	1	WASHER, {PP:80747812}
27	84435732	1	PLATE,
28	84435728	1	SUPPORT,
29	120103	7	SCREW, {PP:80120103} Hex, M8 x 16, 8.8, M8x16
30	89706690	3	NUT, CL 8, M8 x 1.25 x 13.0
31	86512135	8	SCREW, Hex Soc Hd, M6 x 20, 12.9, M6x20
32	322357	8	WASHER, LOCK, {PP:80322357} Belleville, M6, Belleville, M6
33	84455916	1	TUBE, , ASN D323
34	335174	1	CONNECTOR, HYD., {PP:80335174} , ASN D323
35	435349	1	ELBOW, {PP:80435349} , ASN D323
36	9838305	1	WASHER, {PP:89838305} , ASN D323

WWW.KOBMO.BY

07.42A(01) CROP PRO PLUS TM, HYDRAULICS ON CROP PRO PLUS, BELT DRIVE

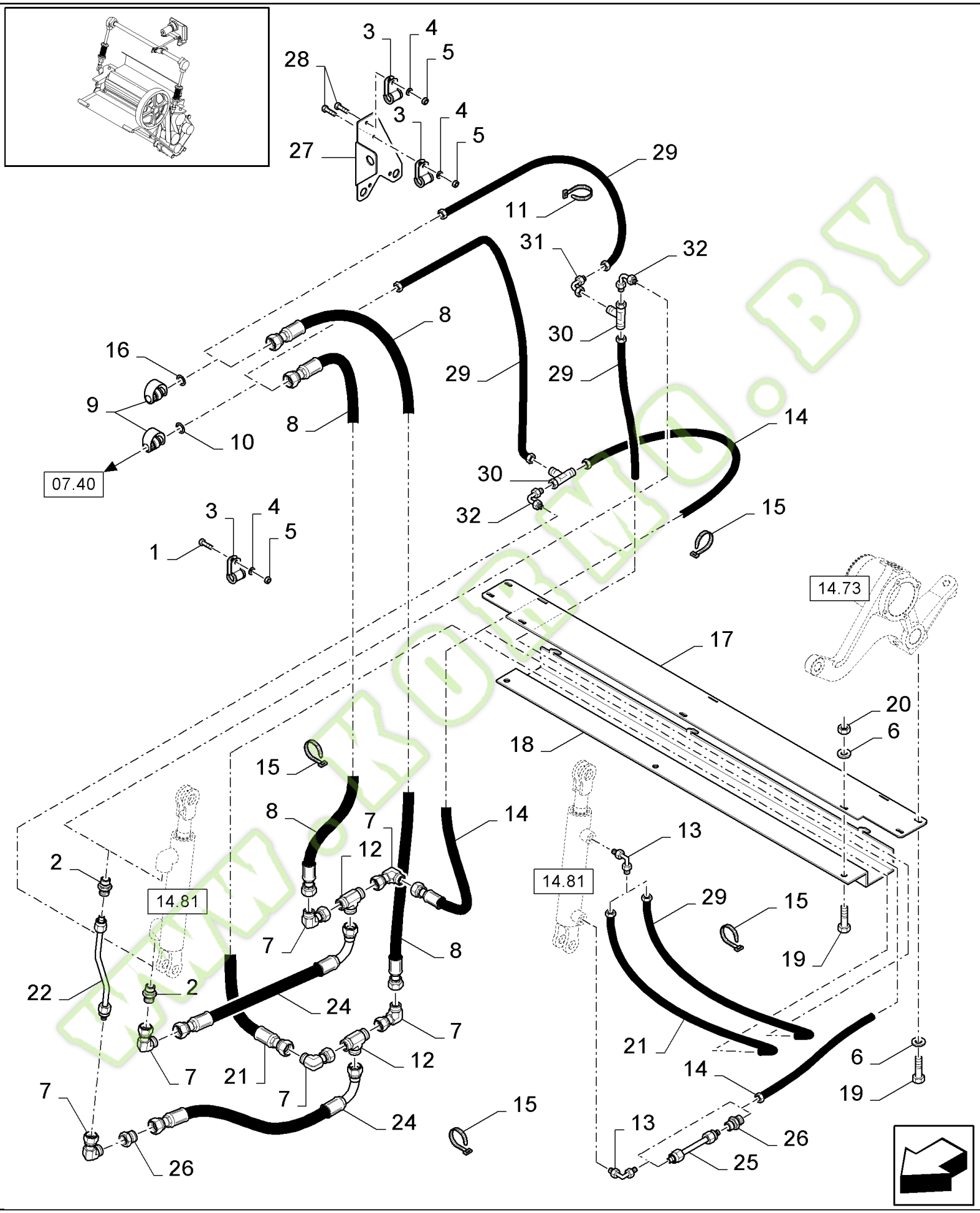

FX50 SELF-PROPELLED FORAGE HARVESTER (10/02-)

07.42A(01) CROP PRO PLUS TM, HYDRAULICS ON CROP PRO PLUS, BELT DRIVE

Ref	Part Number	Qty	Description
1	80043118	2	SCREW, M6x40, NOT FOR WHOLE CROP, ASN D326
1	80043118	2	SCREW, M6x40, ASN D323
2	84077400	2	CONNECTOR, HYD., , NOT FOR WHOLE CROP, ASN D326
2	84077400	2	CONNECTOR, HYD., , ASN D323
3	418407	3	CLAMP, {PP:80418407}
4	322357	AR	WASHER, LOCK, {PP:80322357} Belleville, M6, Belleville, M6
5	9706755	AR	NUT, {PP:89706755} M6, Cl 8, M6
6	322358	4	WASHER, LOCK, {PP:80322358} Belleville, M8, 8MM
7	418283	6	ELBOW, {PP:80418283}
8	84431376	2	HOSE, FLEXIBLE,
9	456012	2	COUPLING, QUICK, MALE, {PP:80456012}
10	747811	1	WASHER, {PP:80747811}
11	396718	3	STRAP, {PP:80396718} , NOT FOR WHOLE CROP, BSN C325
11	396718	3	STRAP, {PP:80396718} , BSN C322
12	84064562	2	CONNECTOR, HYD., , ASN D326
13	84018535	2	ELBOW, , ASN D326
14	84431376	1	HOSE, FLEXIBLE, , NOT FOR WHOLE CROP, BSN C325
14	424525	1	HOSE, FLEXIBLE, {PP:80424525} , NOT FOR WHOLE CROP, ASN D326
14	424526	1	HOSE, {PP:80424526} , BSN C322
14	424525	1	HOSE, FLEXIBLE, {PP:80424525} , ASN D323
15	323597	4	STRAP, {PP:80323597}
16	747812	1	WASHER, {PP:80747812}
17	84435732	1	PLATE,
18	84435728	1	SUPPORT,
19	120103	7	SCREW, {PP:80120103} Hex, M8 x 16, 8.8, M8x16
20	89706690	3	NUT, M8x1.25x13.0
21	84064464	1	HOSE, FLEXIBLE, , NOT FOR WHOLE CROP, ASN D326
21	84064464	1	HOSE, FLEXIBLE, , ASN D323
22	84455675	1	TUBE, , NOT FOR WHOLE CROP, ASN D326
22	84455675	1	TUBE, , BSN C325
23	379430	1	CONNECTION, 3 WAY, {PP:80379430} , NOT FOR WHOLE CROP, BSN C325
23	379430	1	CONNECTION, 3 WAY, {PP:80379430} , BSN C322
24	9839227	2	HOSE, {PP:89839227} , NOT FOR WHOLE CROP, ASN D326
24	9839227	2	HOSE, {PP:89839227} , ASN D323
25	84074556	1	TUBE, HYD, , NOT FOR WHOLE CROP, ASN D326
25	84074556	1	TUBE, HYD, , ASN D323
26	335172	2	CONNECTOR, HYD., {PP:80335172} , NOT FOR WHOLE CROP, ASN D326
26	335172	2	CONNECTOR, HYD., {PP:80335172} , ASN D323
27	84431461	1	SUPPORT, , NOT FOR WHOLE CROP, BSN C325
27	84431461	1	SUPPORT, , BSN C322
28	43117	2	SCREW, {PP:80043117} Hex, M6 x 30, 8.8, , NOT FOR WHOLE CROP, BSN C325
28	43117	2	SCREW, {PP:80043117} Hex, M6 x 30, 8.8, , BSN C322
29	84431386	3	HOSE, FLEXIBLE, , NOT FOR WHOLE CROP, BSN C325
29	84431386	3	HOSE, FLEXIBLE, , BSN C322
30	84064562	2	CONNECTOR, HYD., , NOT FOR WHOLE CROP, BSN C325

LAND ROBMO.BY

FX50 SELF-PROPELLED FORAGE HARVESTER (10/02-)

07.42A(01) CROP PRO PLUS TM, HYDRAULICS ON CROP PRO PLUS, BELT DRIVE

Ref	Part Number	Qty	Description
30	84064562	2	CONNECTOR, HYD., , BSN C322
31	418283	1	ELBOW, {PP:80418283} , NOT FOR WHOLE CROP, BSN C325
31	418283	1	ELBOW, {PP:80418283} , BSN C322
32	84018535	2	ELBOW, , NOT FOR WHOLE CROP, BSN C325
32	84018535	2	ELBOW, , BSN C322

WWW.KOBMO.BY

07.43(01) CROP PRO PLUS TM, HYDRAULICS ON BASE MACHINE FOR CYLINDER (BELT DRIVE VERSION)

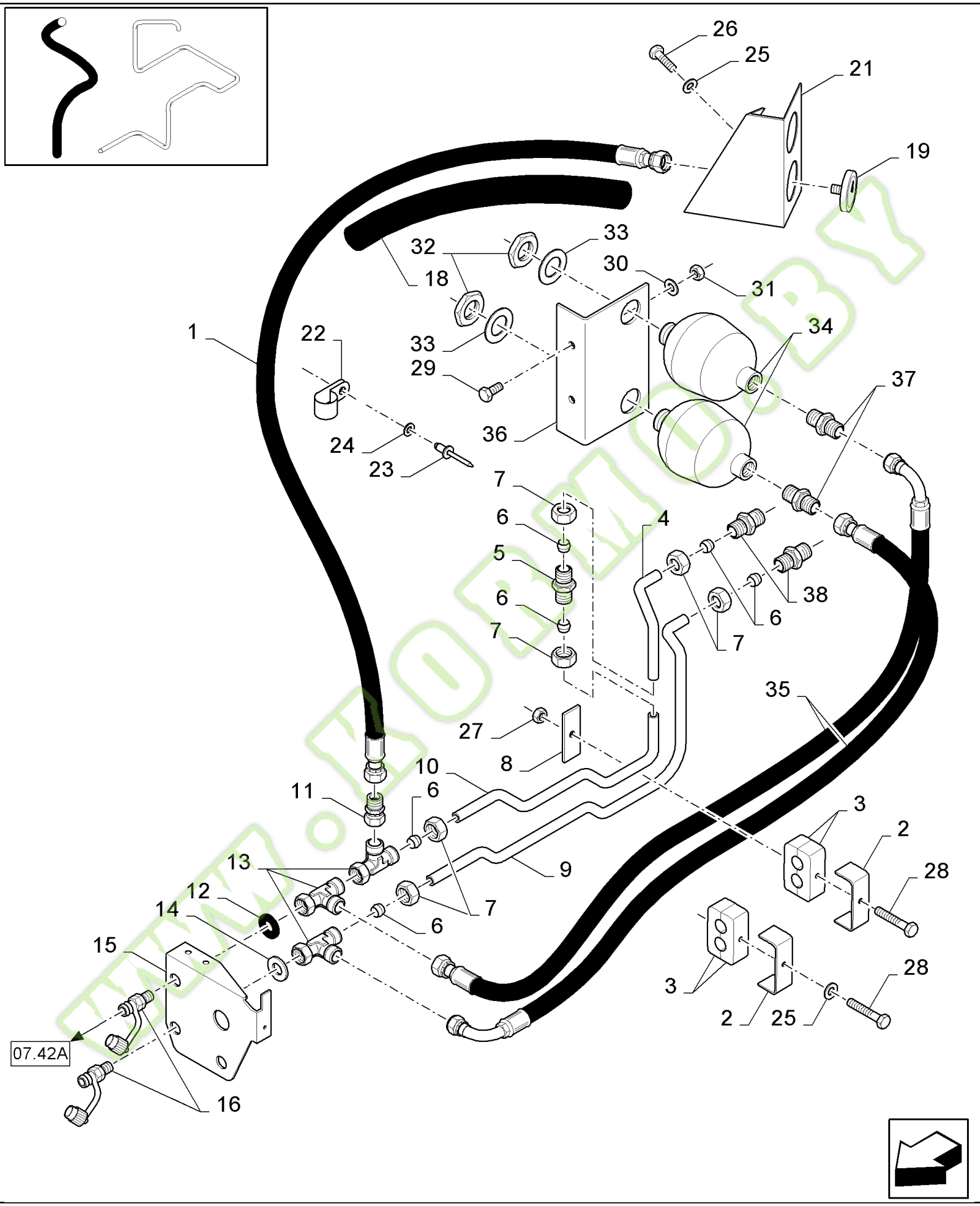

FX50 SELF-PROPELLED FORAGE HARVESTER (10/02-)

07.43(01) CROP PRO PLUS TM, HYDRAULICS ON BASE MACHINE FOR CYLINDER (BELT DRIVE VERSION)

Ref	Part Number	Qty	Description
1	84100169	2	HOSE, FLEXIBLE,
2	431941	3	SUPPORT, {PP:80431941}
3	430357	6	CLAMP, {PP:80430357}
4	84440830	1	TUBE, HYD,
5	335172	1	CONNECTOR, HYD., {PP:80335172}
6	335136	AR	FERRULE, {PP:80335136} 8MM
7	335135	AR	NUT, {PP:80335135} M8
8	434097	2	BRACKET, {PP:80434097}
9	84440832	1	TUBE, HYD,
10	84440835	AR	TUBE, HYD,
11	84431481	1	CONNECTOR, HYD.,
12	747812	1	WASHER, {PP:80747812}
13	84064562	3	CONNECTOR, HYD.,
14	747811	1	WASHER, {PP:80747811}
15	84443780	1	SUPPORT,
16	456017	2	COUPLING, QUICK, MALE, {PP:80456017}
18	84806687	1	SHEATH, FLEXIBLE,
19	9513115	1	INSTRUMENT, MEASURING, {PP:89513115}
21	84431490	1	SUPPORT,
22	9507808	1	CLAMP, {PP:89507808}
23	NS	1	NOT SERVICED,
24	140182	1	WASHER, {PP:80140182} M5 x 18 x 2, DIA. 5.5MM
25	322357	4	WASHER, LOCK, {PP:80322357} Belleville, M6, Belleville, M6
26	86508568	2	SCREW, Hex, M6 x 16, 8.8, M16x16
27	412152	3	NUT, {PP:80412152} M6 x 1, Cl 8.8, M16
28	80043118	4	SCREW, M6x40
29	43128	2	SCREW, {PP:80043128} Hex, M8 x 30, 8.8, M8x25
30	322358	2	WASHER, LOCK, {PP:80322358} Belleville, M8, DIA. 8MM
31	89706690	2	NUT, M8
32	308823	2	NUT, {PP:80308823} M28 x 1.5, Cl 8, M28
33	140110	2	WASHER, {PP:80140110} DIA. 28MM
34	84018412	2	ACCUMULATOR,
35	84446090	2	HOSE, FLEXIBLE,
36	84447003	1	SUPPORT,
37	386215	2	CONNECTOR, HYD., {PP:80386215}
38	396162	2	CONNECTOR, HYD., {PP:80396162}

WWW.KORMO.BY

07.44(01) CROP PRO PLUS TM, HYDRAULICS ON BASE MACHINE (BELT DRIVE VERSION)

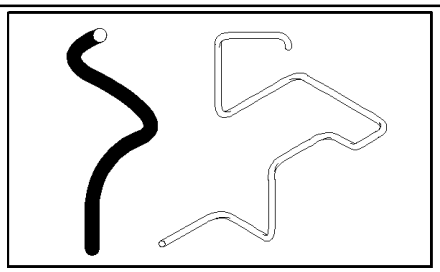

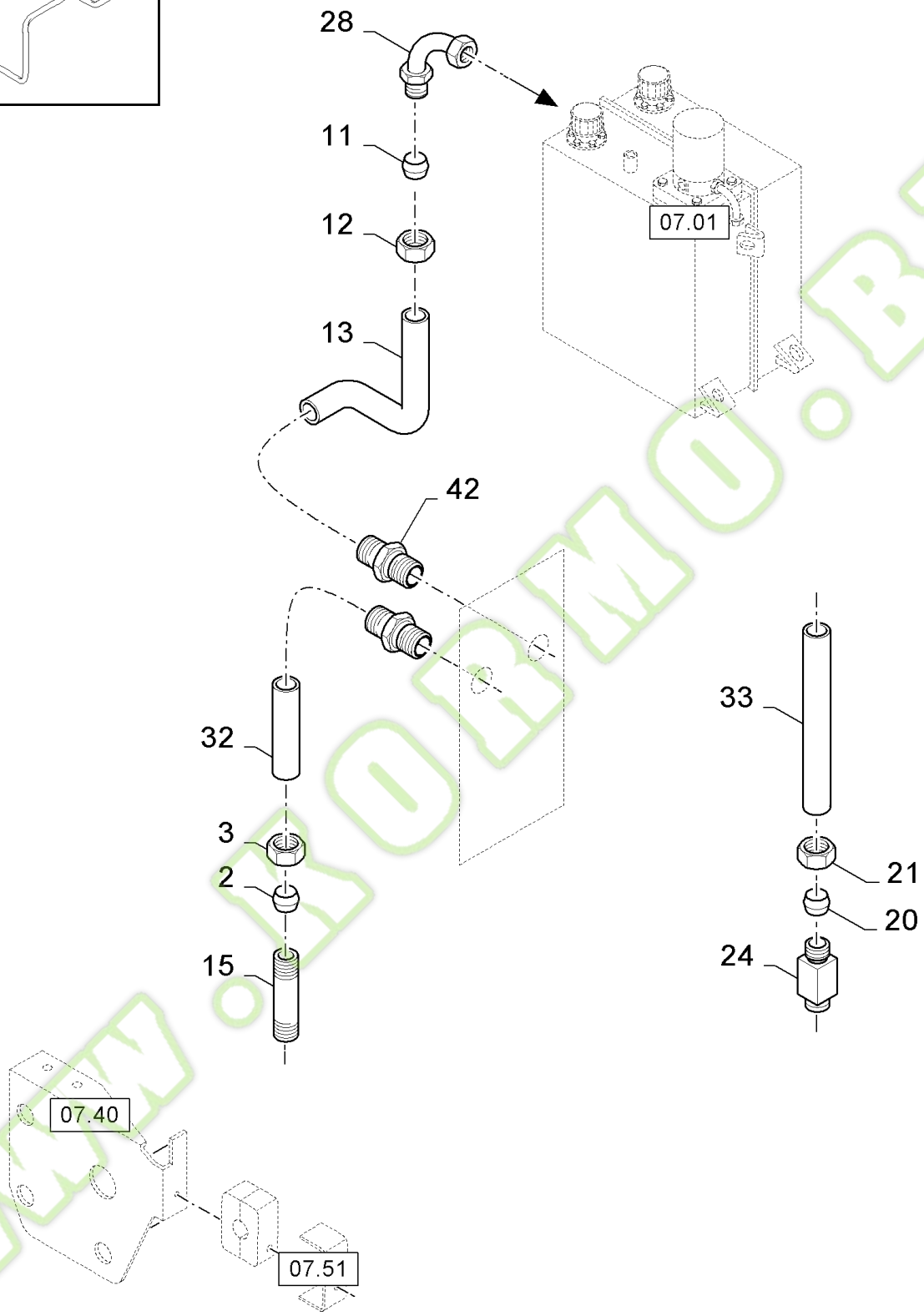

WWW.KOBMO.BY

FX50 SELF-PROPELLED FORAGE HARVESTER (10/02-)

07.44(01) CROP PRO PLUS TM, HYDRAULICS ON BASE MACHINE (BELT DRIVE VERSION)

Ref	Part Number	Qty	Description
2	335169	AR	FERRULE, {PP:80335169} 16MM
3	335171	AR	NUT, {PP:80335171} M16
11	335168	AR	FERRULE, {PP:80335168} 18MM
12	335170	AR	NUT, {PP:80335170} M18
13	84435144	AR	TUBE, HYD,
15	335174	1	CONNECTOR, HYD., {PP:80335174}
20	150014	AR	FERRULE, {PP:80150014} 10MM
21	86548975	AR	NUT, M10
24	150017	1	CONNECTOR, HYD., {PP:80150017}
28	447770	1	CONNECTOR, HYD., {PP:80447770}
32	84429997	AR	TUBE, HYD,
33	84432318	AR	TUBE, HYD,
42	394373	1	CONNECTOR, HYD., {PP:80394373}

www.KOBMO.BY

07.51(01) TUBE CLAMPS AND HYDRAULIC TUBES

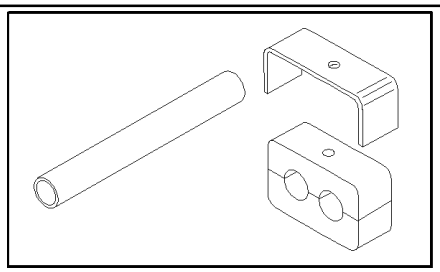

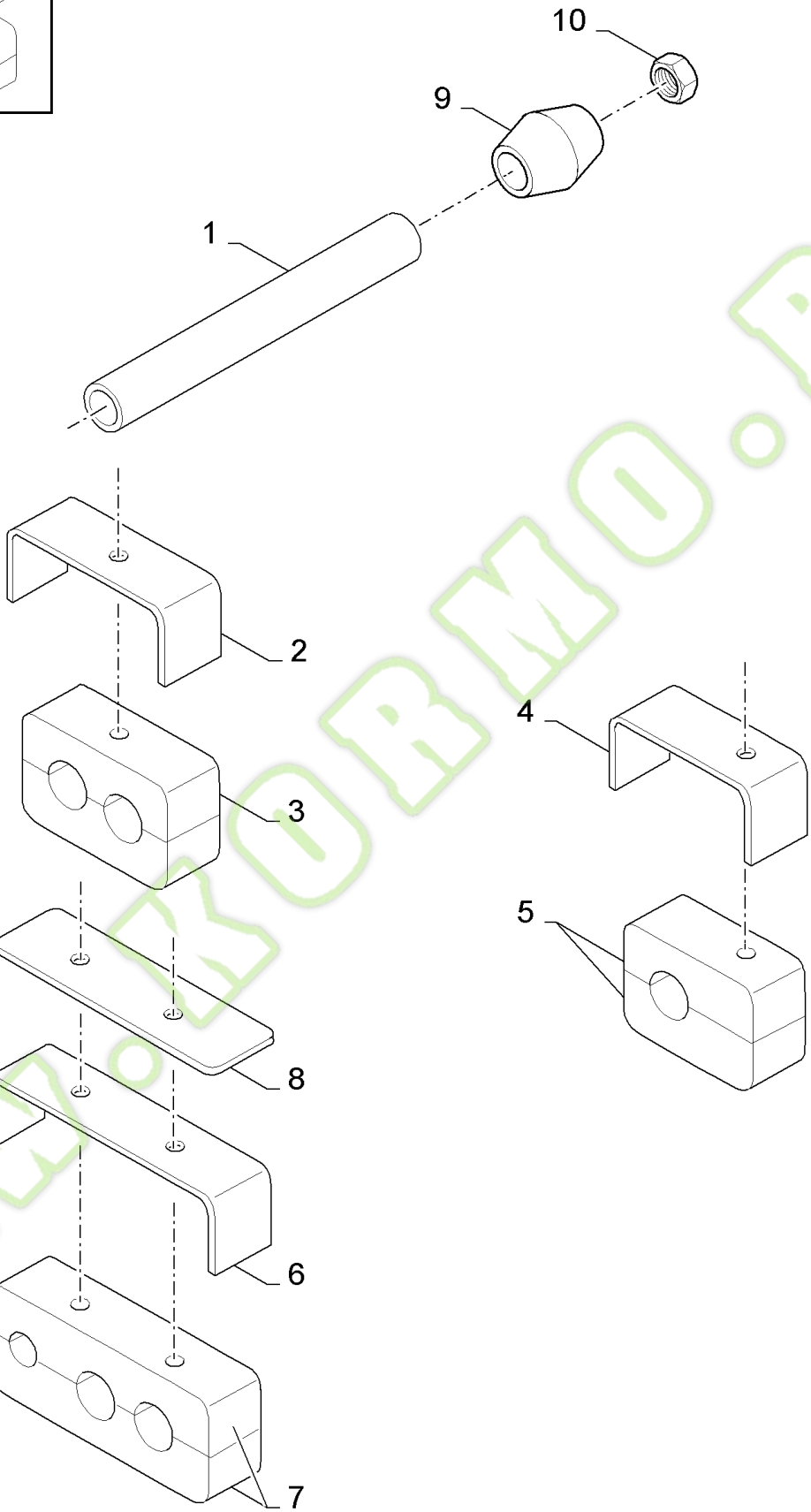

www.KOBMO.BY

FX50 SELF-PROPELLED FORAGE HARVESTER (10/02-)

07.51(01) TUBE CLAMPS AND HYDRAULIC TUBES

Ref	Part Number	Qty	Description
1	371540	AR	TUBE, RIGID, {PP:80371540} D=8MM,L=2M
1	371539	AR	TUBE, RIGID, {PP:80371539} D=10MM,L=2M
1	9513719	AR	TUBE, RIGID, {PP:89513719} D=12MMX1.5,L=2M
1	371536	AR	TUBE, RIGID, {PP:80371536} D=16MM,L=2M
1	371534	AR	TUBE, RIGID, {PP:80371534} D=18MM,L=2M
1	9811333	AR	TUBE, RIGID, {PP:89811333} D=28MM,L=2M
1	75931	AR	TUBE, RIGID, {PP:80075931} D=3/8",L=48"
1	75932	AR	TUBE, RIGID, {PP:80075932} D=1/2",L=48"
1	75933	AR	TUBE, RIGID, {PP:80075933} D=5/8",L=48"
1	75934	AR	TUBE, RIGID, {PP:80075934} D=3/4",L=48"
2	431941	AR	SUPPORT, {PP:80431941} 8-12MM
2	431942	AR	SUPPORT, {PP:80431942} Hex Hd, #10-32 x 1/2", 16MM-3/4"
2	743320	AR	SUPPORT, {PP:80743320} 28MM
3	430356	AR	CLAMP, {PP:80430356} 16MM-3/4"
3	430357	AR	CLAMP, {PP:80430357} 8-12MM
3	457547	AR	CLAMP, {PP:80457547} 28MM
4	433100	AR	SUPPORT, {PP:80433100} 16MM-3/4"
4	433101	AR	SUPPORT, {PP:80433101} 8-10MM
4	442340	AR	SUPPORT, {PP:80442340} 12MM
4	743318	AR	SUPPORT, {PP:80743318} 28MM
5	433007	AR	CLAMP, {PP:80433007} 16MM-3/4"
5	433008	AR	CLAMP, {PP:80433008} 8-12MM
5	457546	AR	CLAMP, {PP:80457546} 28MM
6	455533	AR	CLAMP, {PP:80455533}
7	455534	AR	SUPPORT, {PP:80455534}
8	434103	AR	PLATE, {PP:80434103} 20x3
9	150015	AR	FERRULE, {PP:80150015} 12MM
9	335136	AR	FERRULE, {PP:80335136} 8MM
9	150014	AR	FERRULE, {PP:80150014} 10MM
9	335169	AR	FERRULE, {PP:80335169} 16MM
9	412528	AR	FERRULE, {PP:80412528} 28MM
10	86548976	AR	NUT, M12
10	335135	AR	NUT, {PP:80335135} M8
10	100042	AR	NUT, {PP:80100042} M10
10	335171	AR	NUT, {PP:80335171} M16
10	412527	AR	NUT, {PP:80412527} M28

WWW.SOBMO.BY

SHEET METAL/DECALS	REVÊTEMENTS EN TÔLE DÉCALCOMANIE	CHAPEADOS/CALCOMANÍAS	METALPLADEBEKLÆDN. MÆRKATER
LAMIERATI DECALCOMANIE	BLECHVERKLEIDUNGEN ABZIEHBILDER	REVESTIMENTOS EM CHAPAS/DECALCOMANIAS	METALEN PLATEN PLAKPLAATJES

SEC. 8

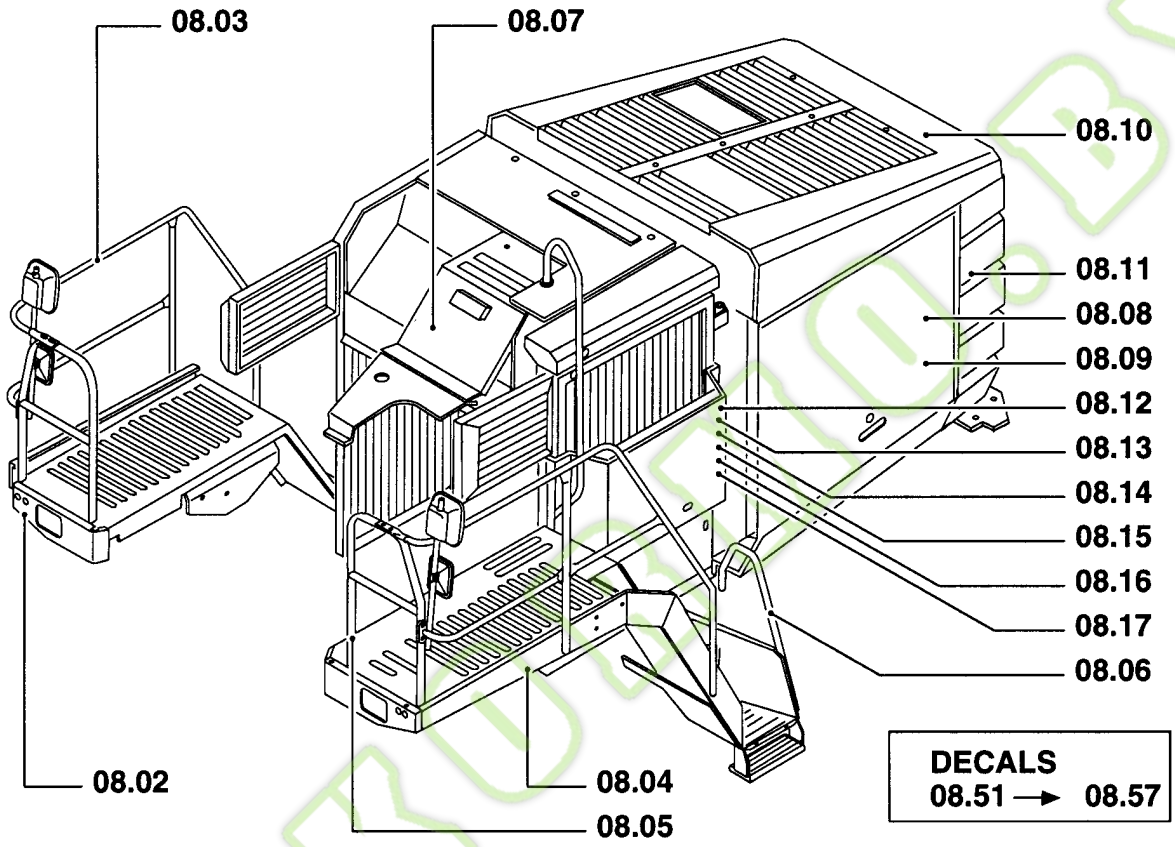

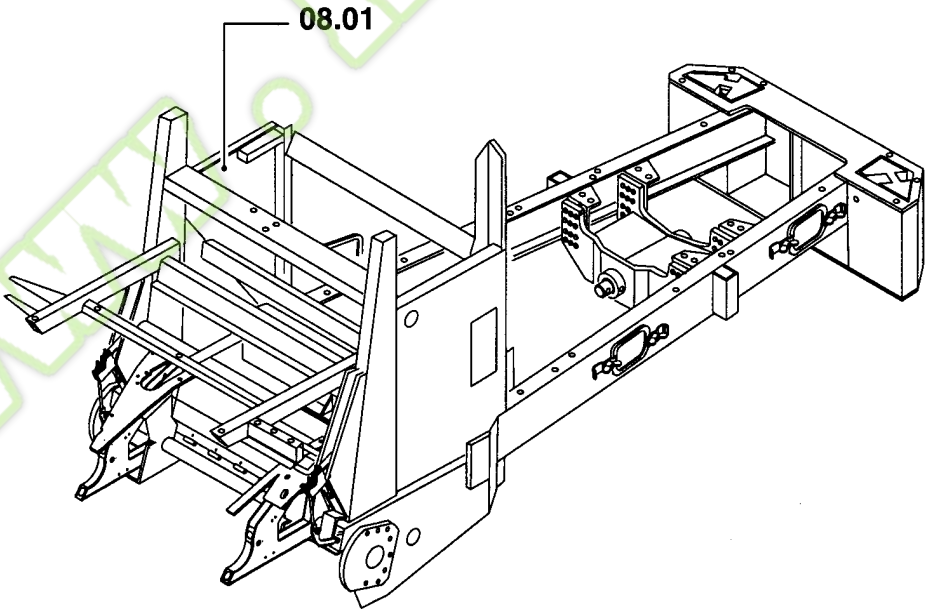

08.000(01) SECTION LIST 8

Ref	Part Number	Qty	Description

WWW.KORMO.BY

08.01(01) BATTERY BOX

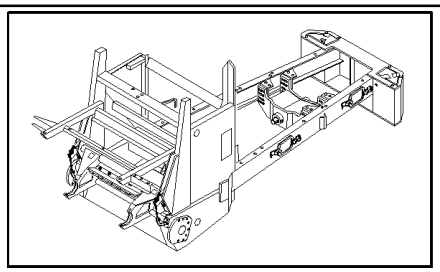

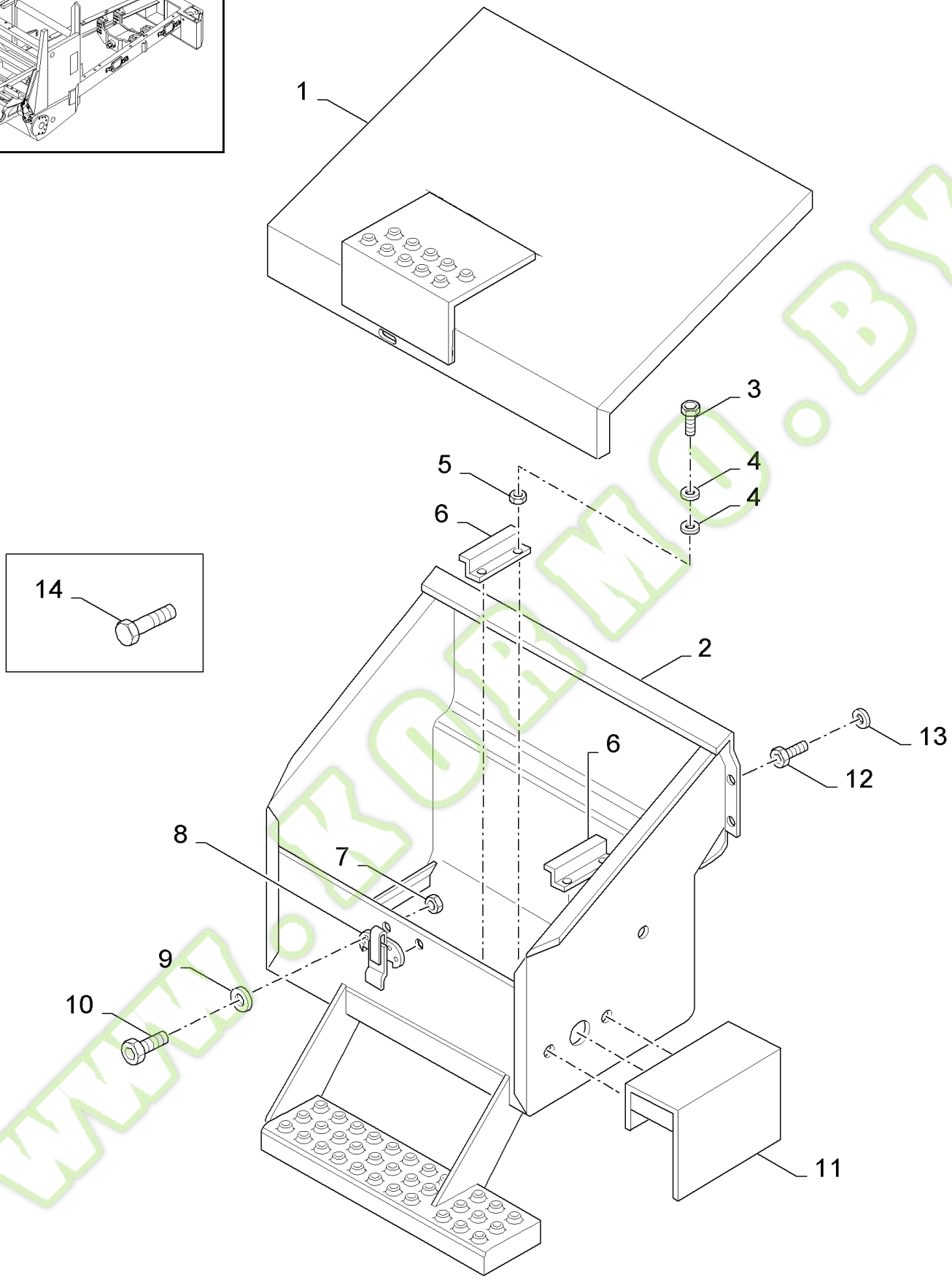

www.kormo.by

FX50 SELF-PROPELLED FORAGE HARVESTER (10/02-)

08.01(01) BATTERY BOX

Ref	Part Number	Qty	Description
1	84011991	1	COVER,
2	84011996	1	TRAY, BATTERY,
3	120100	4	BOLT, {PP:80120100} Hex, M6 x 20, 8.8, M6x20
4	322357	8	WASHER, LOCK, {PP:80322357} Belleville, M6, Belleville, M6
5	9706755	4	NUT, {PP:89706755} M6, Cl 8, M6
6	80422831	2	SUPPORT,
7	86508813	2	NUT, M4, Cl 8, M5
8	244457	1	CLAMP, {PP:80244457}
9	322356	2	WASHER, LOCK, {PP:80322356} 5MM
10	412483	2	SCREW, {PP:80412483} Cross Pan Hd, M5 x 10, M5x10
11	84011994	1	COVER,
12	120109	6	SCREW, {PP:80120109} Hex, M10 x 20, 8.8, Full Thd, M10x20
13	140045	6	WASHER, LOCK, {PP:80140045} Belleville, M10, 10MM
14	84062747	1	BOLT, Hex, M30 x 150, 8.8, Full Thd, , TOOL FOR PTO

www.KOBMO.BY

08.02(01) OPERATOR'S PLATFORM, RH

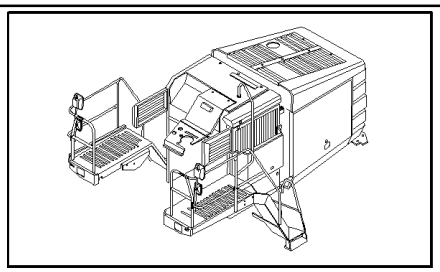

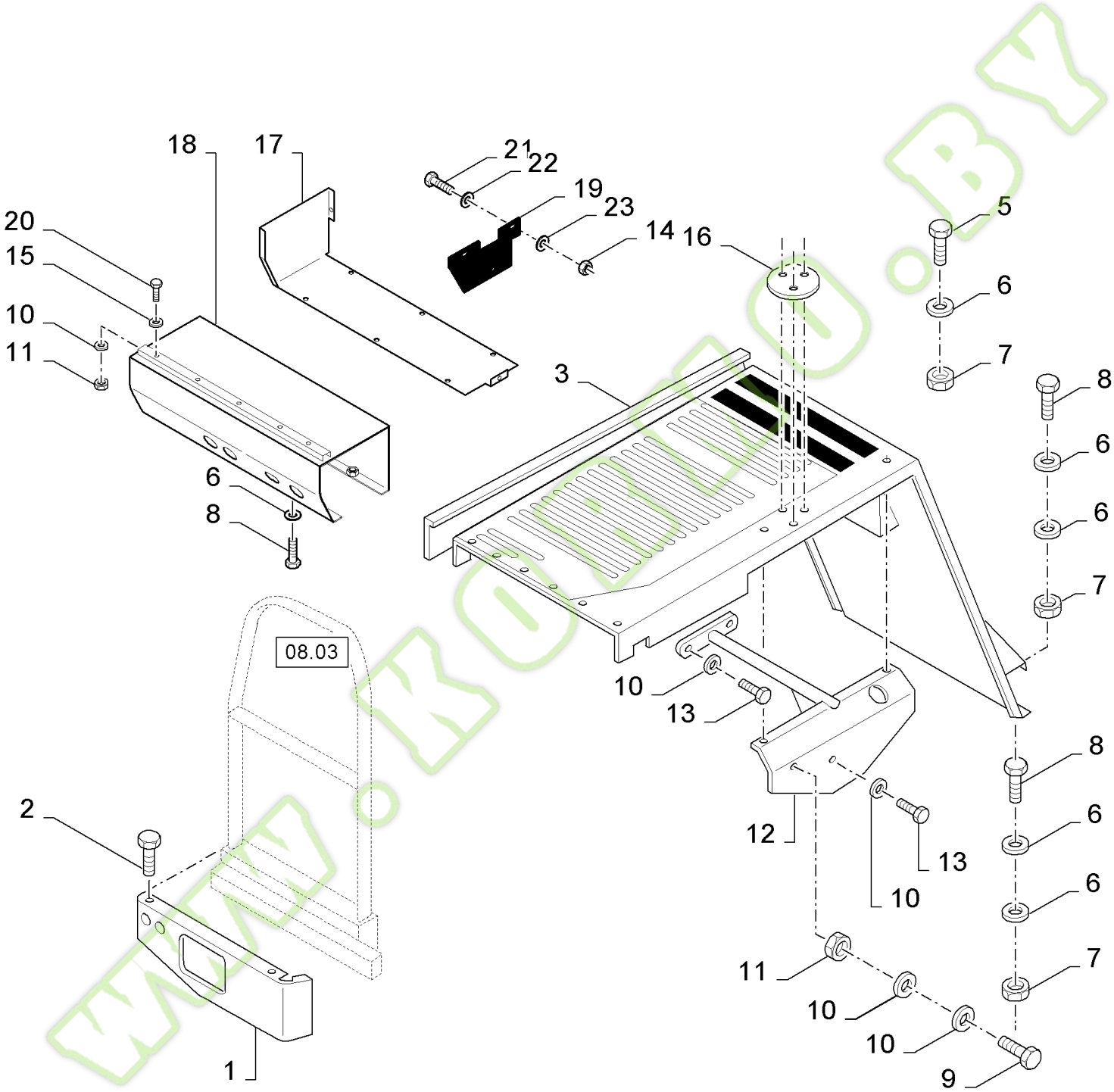

www.ROMTO.BY

FX50 SELF-PROPELLED FORAGE HARVESTER (10/02-)

08.02(01) OPERATOR'S PLATFORM, RH

Ref	Part Number	Qty	Description
1	84001237	1	PLATE,
2	N605772S36	4	SCREW, {PP:83910242}
3	84432129	1	PLATFORM,
4	401502	AR	STRIP, ANTI-SKID, {PP:80401502} 51mm x 18.3 Roll - Cut to Size
5	120037	2	BOLT, {PP:80120037} Short NK, M8 x 20, Cl8.8, Full Thd, M8x20
6	322358	15	WASHER, LOCK, {PP:80322358} Belleville, M8, 8MM
7	89706690	6	NUT, CL 8, M8 x 1.25 x 13.0
8	80120104	9	SCREW, M8x20
9	120109	2	SCREW, {PP:80120109} Hex, M10 x 20, 8.8, Full Thd, M10x20
10	140045	AR	WASHER, LOCK, {PP:80140045} Belleville, M10, 10MM
11	100016	AR	NUT, {PP:80100016} M10, Cl 8, M10
12	84001730	1	SUPPORT,
13	43140	3	BOLT, {PP:80043140} Hex, M10 x 30, 8.8, M10x30
14	9706755	AR	NUT, {PP:89706755} M6, Cl 8, M6
15	140011	5	WASHER, LOCK, {PP:80140011} 10MM
16	84038104	1	COVER,
17	84432355	1	COVER,
18	84442982	1	SHIELD, , BSN C305
18	84449787	1	SHIELD, , ASN D306
19	84432559	1	SEAL, , NOT FOR NA
19	84432333	1	SEAL, , FOR NA ONLY
20	120068	5	SCREW, {PP:80120068} Hex, M10 x 40, 8.8, Full Thd, M10x40
21	120100	AR	BOLT, {PP:80120100} Hex, M6 x 20, 8.8, M6x20
22	140040	AR	WASHER, {PP:80140040} M6 x 22 x 2, 6MM
23	322357	AR	WASHER, LOCK, {PP:80322357} Belleville, M6, Belleville, M6

www.KORMO.BY

08.03(01) MIRRORS AND HAND-RAIL, RH

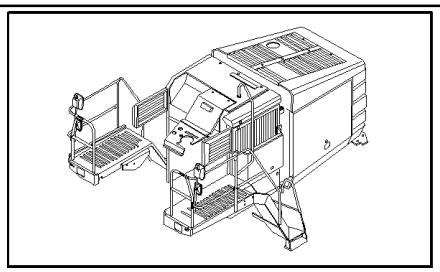

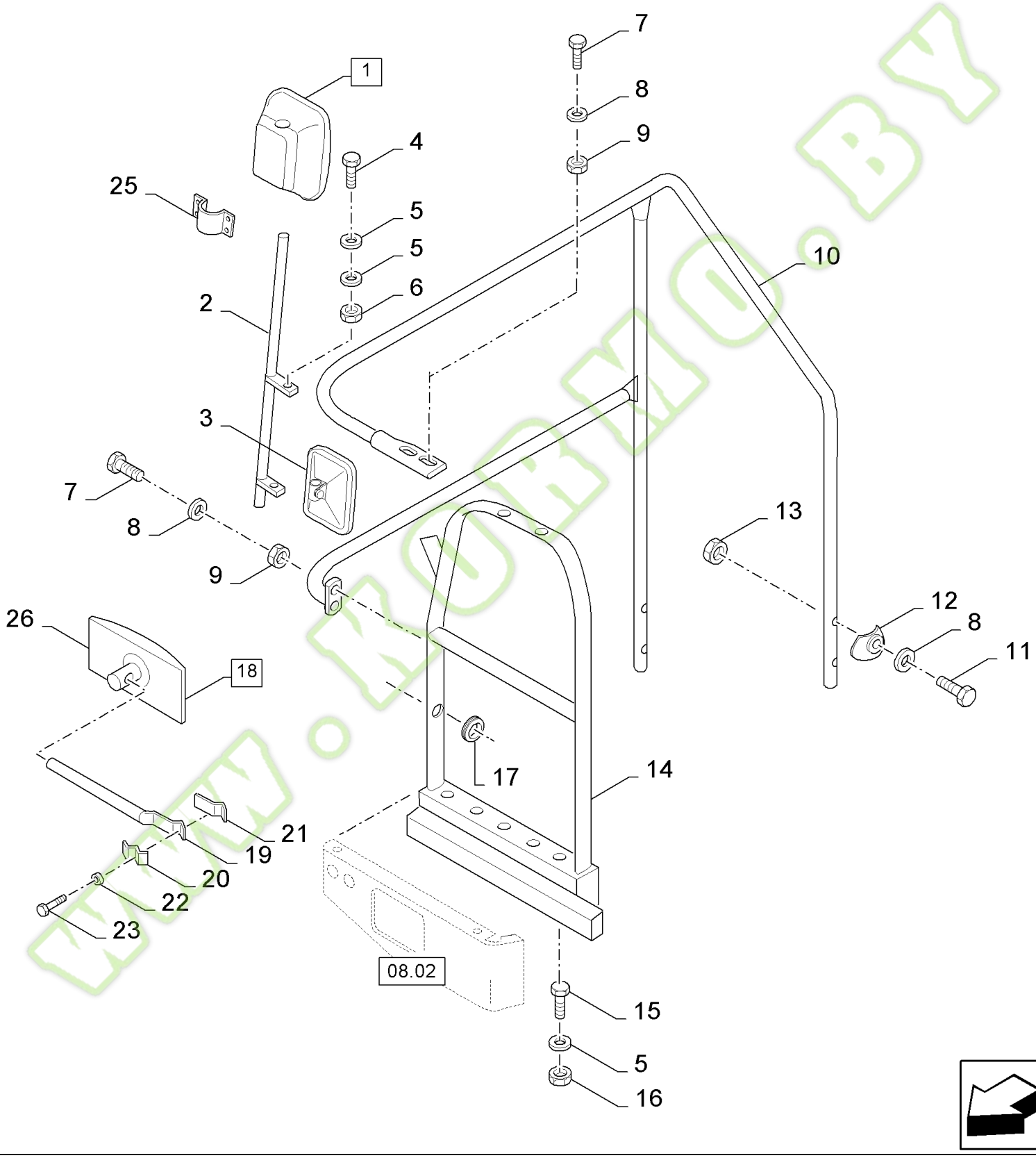

www.ROBMO.BY

FX50 SELF-PROPELLED FORAGE HARVESTER (10/02-)

08.03(01) MIRRORS AND HAND-RAIL, RH

Ref	Part Number	Qty	Description
1	9501005	1	MIRROR, REAR-VIEW, {PP:89501005} (24,25)
2	84019723	1	SUPPORT,
3	437650	1	MIRROR, REAR-VIEW, {PP:80437650} LH
4	43140	2	BOLT, {PP:80043140} Hex, M10 x 30, 8.8, M10x30
5	140045	9	WASHER, LOCK, {PP:80140045} Belleville, M10, 10MM
6	100037	2	NUT, {PP:80100037} M10 x 1.5, Cl 8, M10
7	120060	4	SCREW, {PP:80120060} Hex, M8 x 50, 8.8, M8x50
8	322358	4	WASHER, LOCK, {PP:80322358} Belleville, M8, 8MM
9	89706690	4	NUT, CL 8, M8 x 1.25 x 13.0
10	84001727	1	HANDRAIL,
11	120106	4	SCREW, {PP:80120106} Hex, M8 x 40, 8.8, Full Thd, Hex, M8 x 40, 8.8, Full Thd
12	333962	4	CLAMP, {PP:80333962}
13	100067	4	NUT, {PP:80100067} M8 x 1.25", Cl 8, M8
14	89818337	1	HANDRAIL,
15	120245	5	SCREW, {PP:80120245} Short NK, M10 x 30, Cl8.8, Full Thd, M10x30
16	100016	5	NUT, {PP:80100016} M10, Cl 8, M10
17	190067	1	BUSHING, RUBBER, {PP:80190067}
18	84011599	1	MIRROR, REAR-VIEW, (26), FOR GERMANY ONLY
19	84021090	1	TUBE, RIGID, , FOR GERMANY ONLY
20	84007508	1	CLAMP, , FOR GERMANY ONLY
21	84007510	1	CLAMP, , FOR GERMANY ONLY
22	322357	1	WASHER, LOCK, {PP:80322357} Belleville, M6, Belleville, M6, FOR GERMANY ONLY
23	86977786	1	BOLT, Hex, M6 x 25, 8.8, M6x25, FOR GERMANY ONLY
24	84036577	1	COVER, Back
25	84037250	2	CLAMP,
26	84036693	1	GLASS, , FOR GERMANY ONLY

www.KORMO.BY

08.04(01) OPERATOR'S PLATFORM, LH

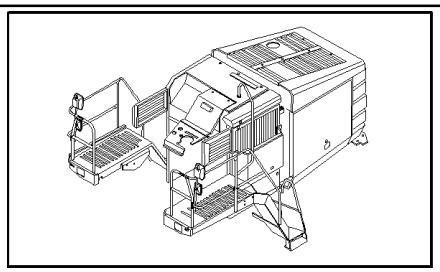

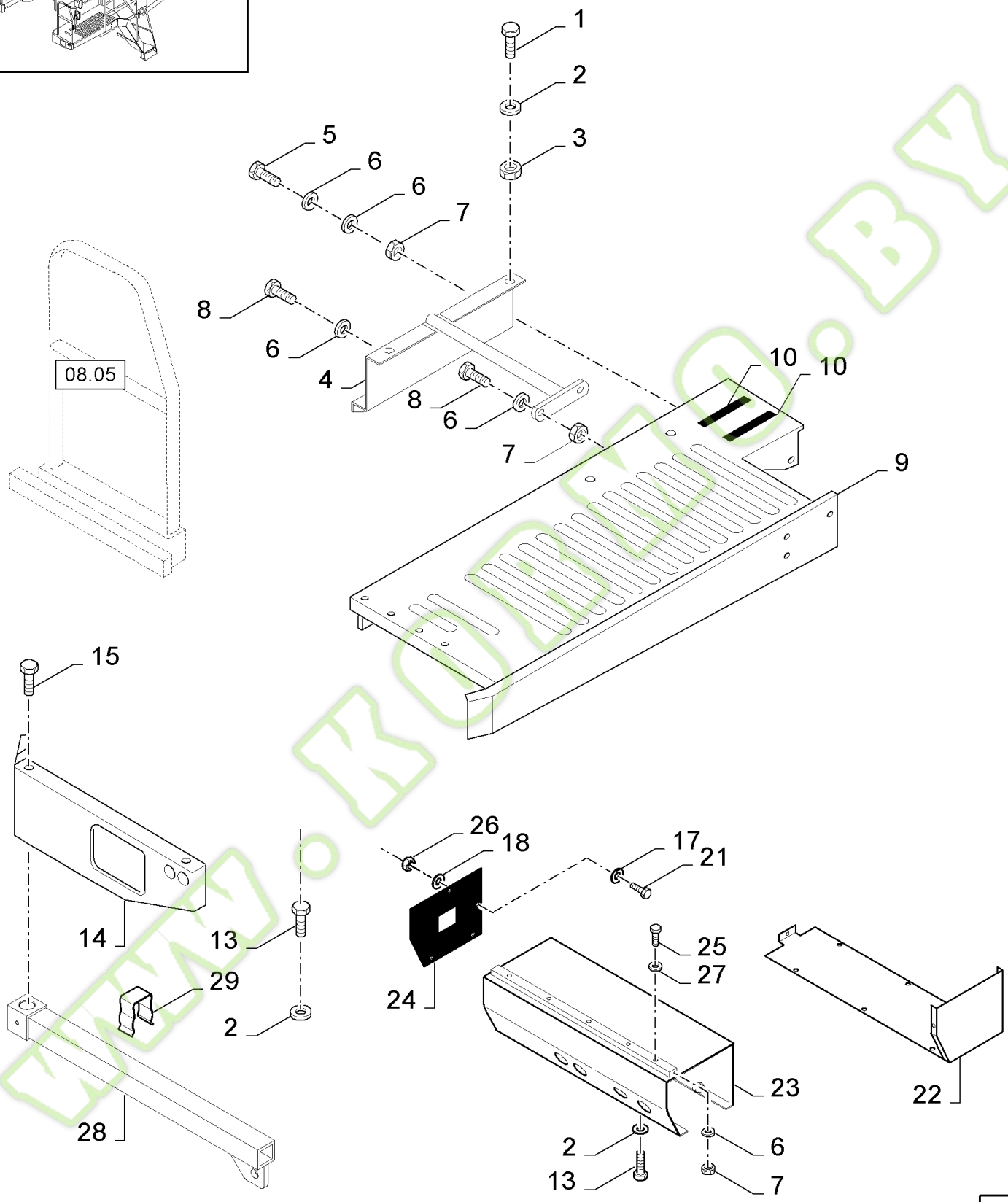

www.KOMTO.BY

FX50 SELF-PROPELLED FORAGE HARVESTER (10/02-)

08.04(01) OPERATOR'S PLATFORM, LH

Ref	Part Number	Qty	Description
1	120037	2	BOLT, {PP:80120037} Short NK, M8 x 20, Cl8.8, Full Thd, M8x20
2	322358	9	WASHER, LOCK, {PP:80322358} Belleville, M8, 8MM
3	89706690	2	NUT, CL 8, M8 x 1.25 x 13.0
4	84442622	1	SUPPORT,
5	120109	2	SCREW, {PP:80120109} Hex, M10 x 20, 8.8, Full Thd, M10x20
6	140045	AR	WASHER, LOCK, {PP:80140045} Belleville, M10, 10MM
7	100016	AR	NUT, {PP:80100016} M10, Cl 8, M10
8	43140	2	BOLT, {PP:80043140} Hex, M10 x 30, 8.8, M10x30
9	84432130	1	PLATFORM,
10	401502	AR	STRIP, ANTI-SKID, {PP:80401502} 51mm x 18.3 Roll - Cut to Size
13	80120104	5	SCREW, M8x20
14	84001236	1	PLATE, COVER,
15	N605772S36	4	SCREW, {PP:83910242}
17	140040	AR	WASHER, {PP:80140040} M6 x 22 x 2,
18	322357	AR	WASHER, LOCK, {PP:80322357} Belleville, M6, Belleville, M6
21	120100	AR	BOLT, {PP:80120100} Hex, M6 x 20, 8.8, M6x20
22	84442159	1	COVER,
23	84442172	1	GUARD,
24	84442185	1	SEAL, RUBBER,
25	120068	5	SCREW, {PP:80120068} Hex, M10 x 40, 8.8, Full Thd, M10x40
26	9706755	AR	NUT, {PP:89706755} M6, Cl 8, M6
27	140017	5	WASHER, LOCK, {PP:80140017} M10 x 20 x 2, 10MM
28	84442178	1	ARM,
29	84446872	1	CLIP,

www.KOBMO.BY

08.05(01) MIRRORS AND HAND-RAIL, LH

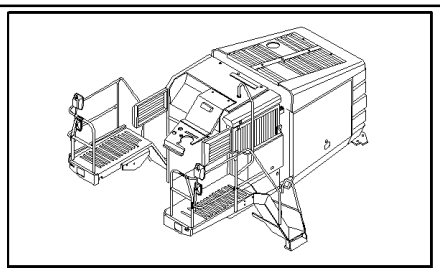

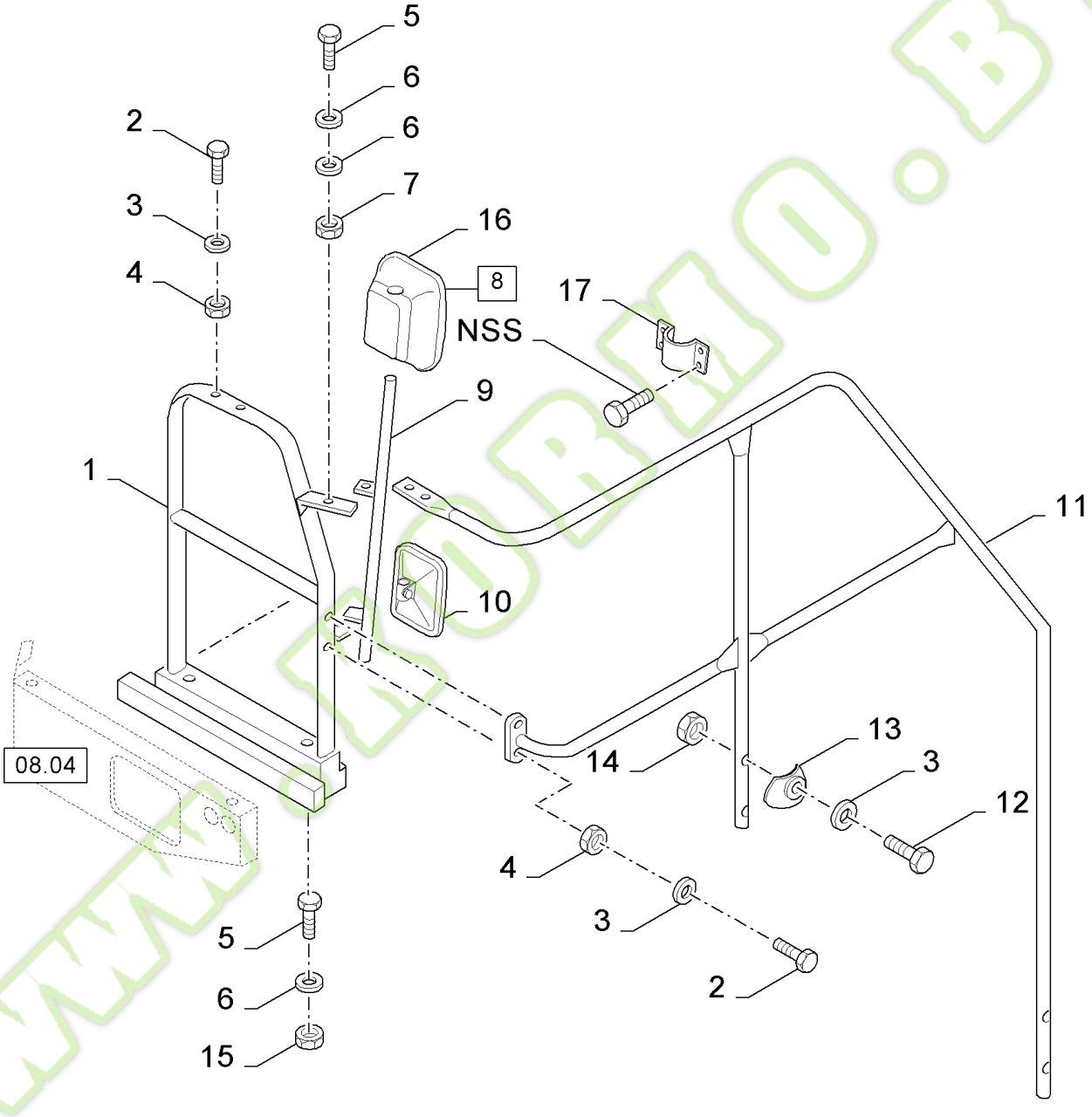

www.FORMO.BY

FX50 SELF-PROPELLED FORAGE HARVESTER (10/02-)

08.05(01) MIRRORS AND HAND-RAIL, LH

Ref	Part Number	Qty	Description
1	84442614	1	GUIDE,
2	120060	4	SCREW, {PP:80120060} Hex, M8 x 50, 8.8, M8x60
3	322358	8	WASHER, LOCK, {PP:80322358} Belleville, M8, 8MM
4	89706690	4	NUT, CL 8, M8 x 1.25 x 13.0
5	43140	2	BOLT, {PP:80043140} Hex, M10 x 30, 8.8, M10x30
6	140045	9	WASHER, LOCK, {PP:80140045} Belleville, M10, 10MM
7	100037	2	NUT, {PP:80100037} M10 x 1.5, Cl 8, M10
8	9501005	1	MIRROR, REAR-VIEW, {PP:89501005} LH(16,17)
9	84019723	1	SUPPORT,
10	437650	1	MIRROR, REAR-VIEW, {PP:80437650}
11	84002314	1	HANDRAIL,
12	120106	4	SCREW, {PP:80120106} Hex, M8 x 40, 8.8, Full Thd, Hex, M8 x 40, 8.8, Full Thd
13	333962	4	CLAMP, {PP:80333962}
14	100067	4	NUT, {PP:80100067} M8 x 1.25", Cl 8, M8
15	100016	5	NUT, {PP:80100016} M10, Cl 8, M10
16	84036577	1	COVER,
17	84037250	2	CLAMP,

www.KOBMO.BY

08.06(01) LADDER

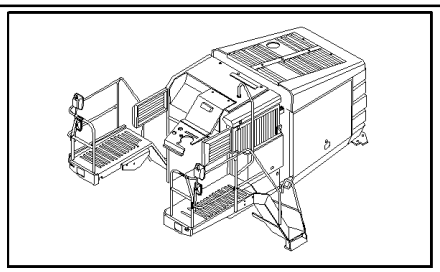

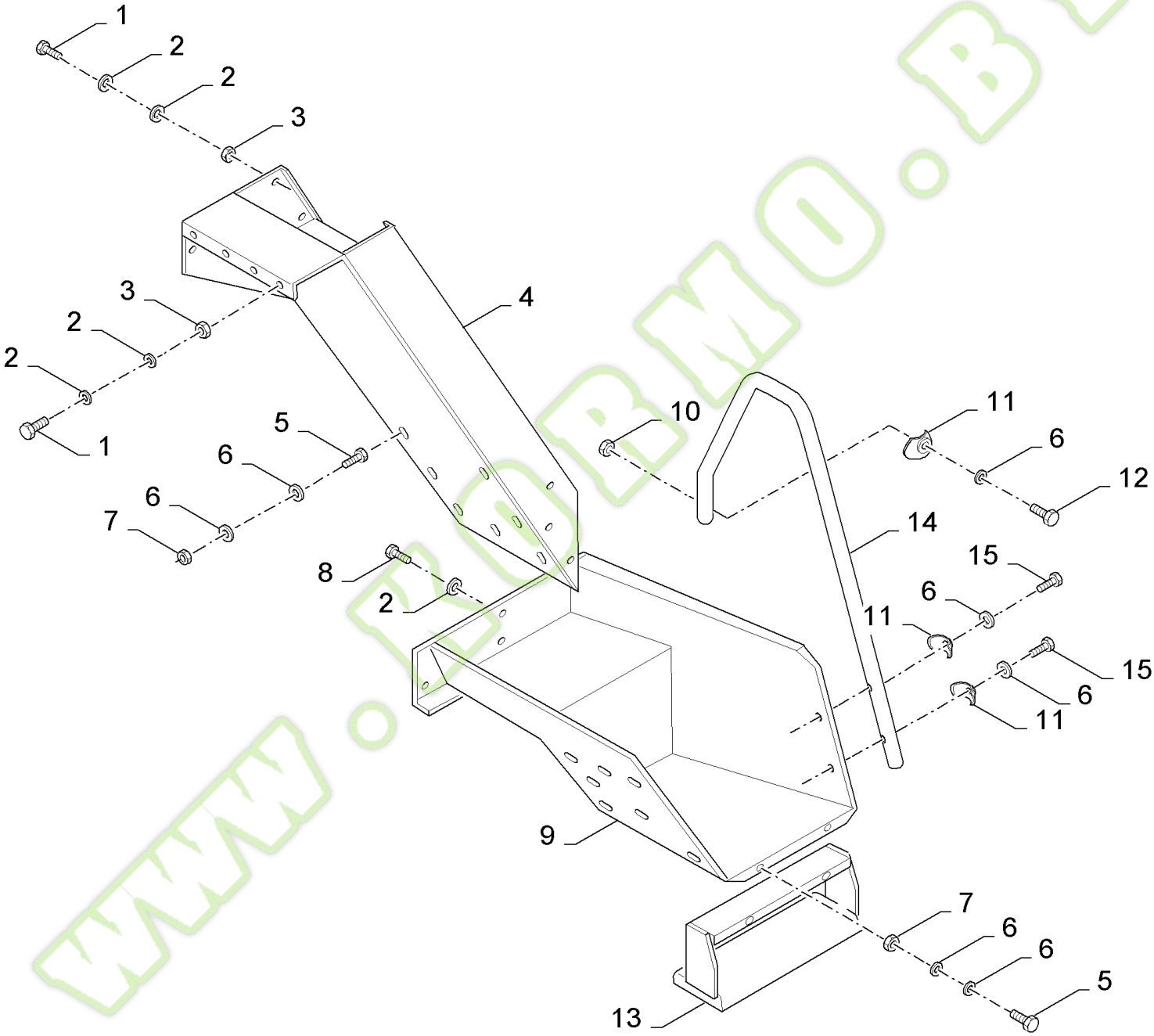

www.BOBMO.BY

FX50 SELF-PROPELLED FORAGE HARVESTER (10/02-)

08.06(01) LADDER

Ref	Part Number	Qty	Description
1	120109	7	SCREW, {PP:80120109} Hex, M10 x 20, 8.8, Full Thd, M10x20
2	140045	16	WASHER, LOCK, {PP:80140045} Belleville, M10, 10MM
3	100016	7	NUT, {PP:80100016} M10, Cl 8, M10
4	84432138	1	LADDER,
5	80120104	9	SCREW, M8x20
6	322358	13	WASHER, LOCK, {PP:80322358} Belleville, M8, 8MM
7	89706690	9	NUT, CL 8, M8 x 1.25 x 13.0
8	43140	6	BOLT, {PP:80043140} Hex, M10 x 30, 8.8, M10x30
9	84432139	1	PLATFORM,
10	100067	2	NUT, {PP:80100067} M8 x 1.25", Cl 8, M8
11	333962	3	CLAMP, {PP:80333962}
12	120106	1	SCREW, {PP:80120106} Hex, M8 x 40, 8.8, Full Thd, Hex, M8 x 40, 8.8, Full Thd
13	84001737	1	STEP,
14	84442523	1	TUBE, , BSN C291
14	84447039	1	TUBE, , ASN D292
15	120191	2	BOLT, {PP:80120191} Short NK, M8 x 40, Cl8.8, Full Thd, M8x40

www.KOBMO.BY

08.07(01) SHIELDS

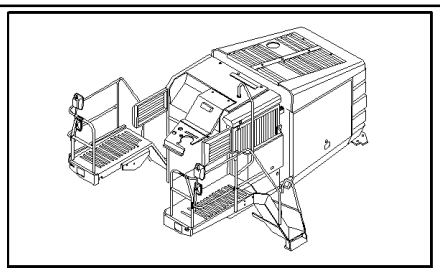

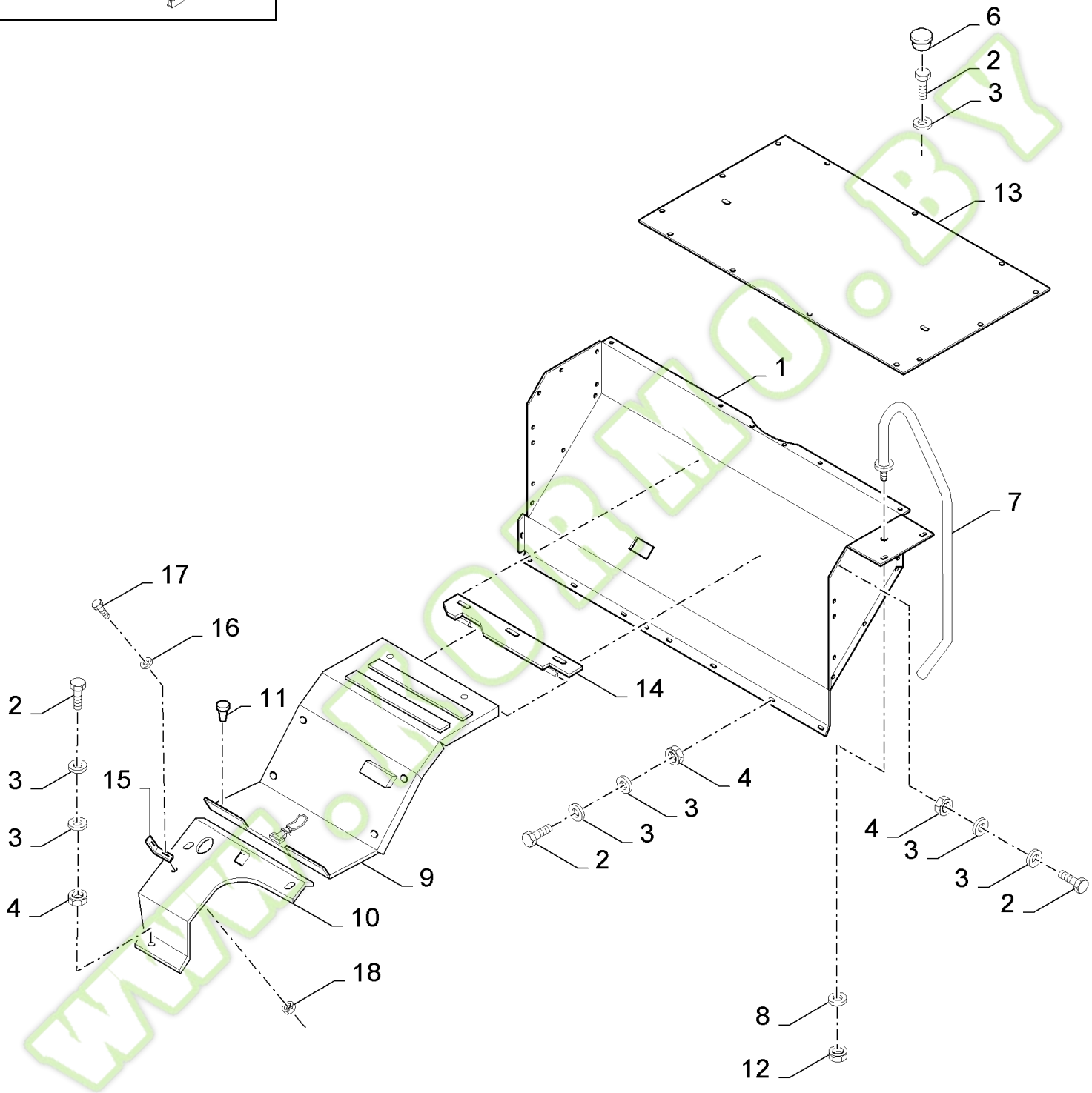

FX50 SELF-PROPELLED FORAGE HARVESTER (10/02-)

08.07(01) SHIELDS

Ref	Part Number	Qty	Description
1	84443542	1	PLATE,
2	80120104	AR	SCREW, M8x20
3	322358	AR	WASHER, LOCK, {PP:80322358} Belleville, M8, 8MM
4	89706690	AR	NUT, CL 8, M8 x 1.25 x 13.0
5	401502	AR	STRIP, ANTI-SKID, {PP:80401502} 51mm x 18.3 Roll - Cut to Size
6	433314	3	PLUG, {PP:80433314}
7	84441538	1	HANDRAIL,
8	140045	1	WASHER, LOCK, {PP:80140045} Belleville, M10, 10MM
9	84061681	1	PLATE,
10	84061683	1	PLATE,
11	331233	1	PLUG, {PP:80331233}
12	100016	1	NUT, {PP:80100016} M10, Cl 8, M10
13	84989053	1	PLATE,
14	84061685	1	SUPPORT,
15	84064409	1	BRACKET,
16	322358	2	WASHER, LOCK, {PP:80322358} Belleville, M8,
17	86507486	2	BOLT (CARRIAGE), Short NK, M8 x 20, Cl8.8, Full Thd,
18	89706690	2	NUT, CL 8, M8 x 1.25 x 13.0

www.KOBMO.BY

08.08(01) SHIELDS, RH

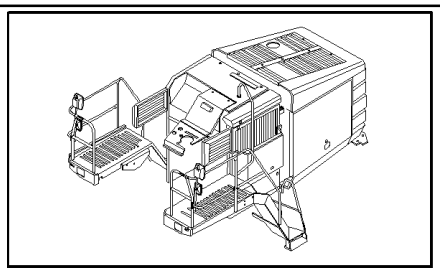

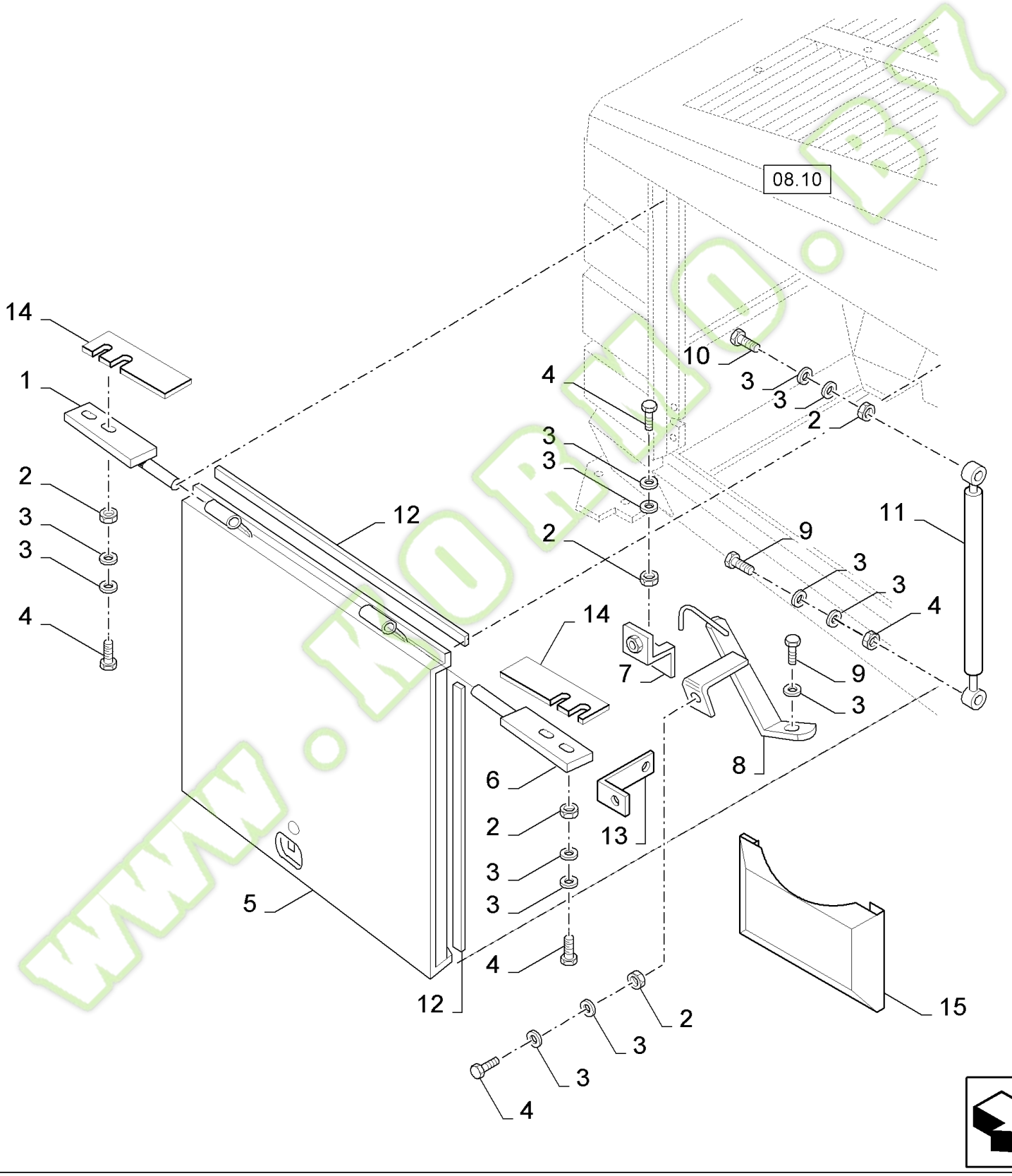

FX50 SELF-PROPELLED FORAGE HARVESTER (10/02-)

08.08(01) SHIELDS, RH

Ref	Part Number	Qty	Description
1	89812798	1	HINGE,
2	89706690	7	NUT, CL 8, M8 x 1.25 x 13.0
3	322358	17	WASHER, LOCK, {PP:80322358} Belleville, M8, 8MM
4	80120104	7	SCREW, M8x20
5	84432140	1	SHIELD,
6	89812799	1	HINGE,
7	84015292	1	LOCK,
8	84001909	1	SUPPORT,
9	43128	2	SCREW, {PP:80043128} Hex, M8 x 30, 8.8, Cap, HH, CL 8.8, M8 x 1.25 x 30
10	120106	1	SCREW, {PP:80120106} Hex, M8 x 40, 8.8, Full Thd, Hex, M8 x 40, 8.8, Full Thd
11	84015664	1	SHOCK ABSORBER,
12	84056062	AR	SEAL PROTECTION, L=6000MM
13	84035131	1	BRACKET,
14	84071345	2	SHIM,
15	84440629	1	SHIELD,

www.KOBMO.BY

08.09(01) SHIELDS, LH

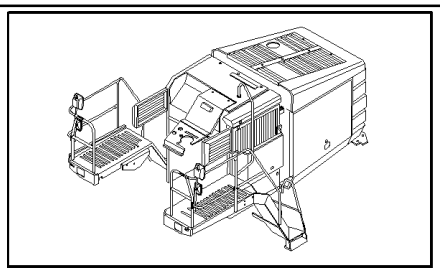

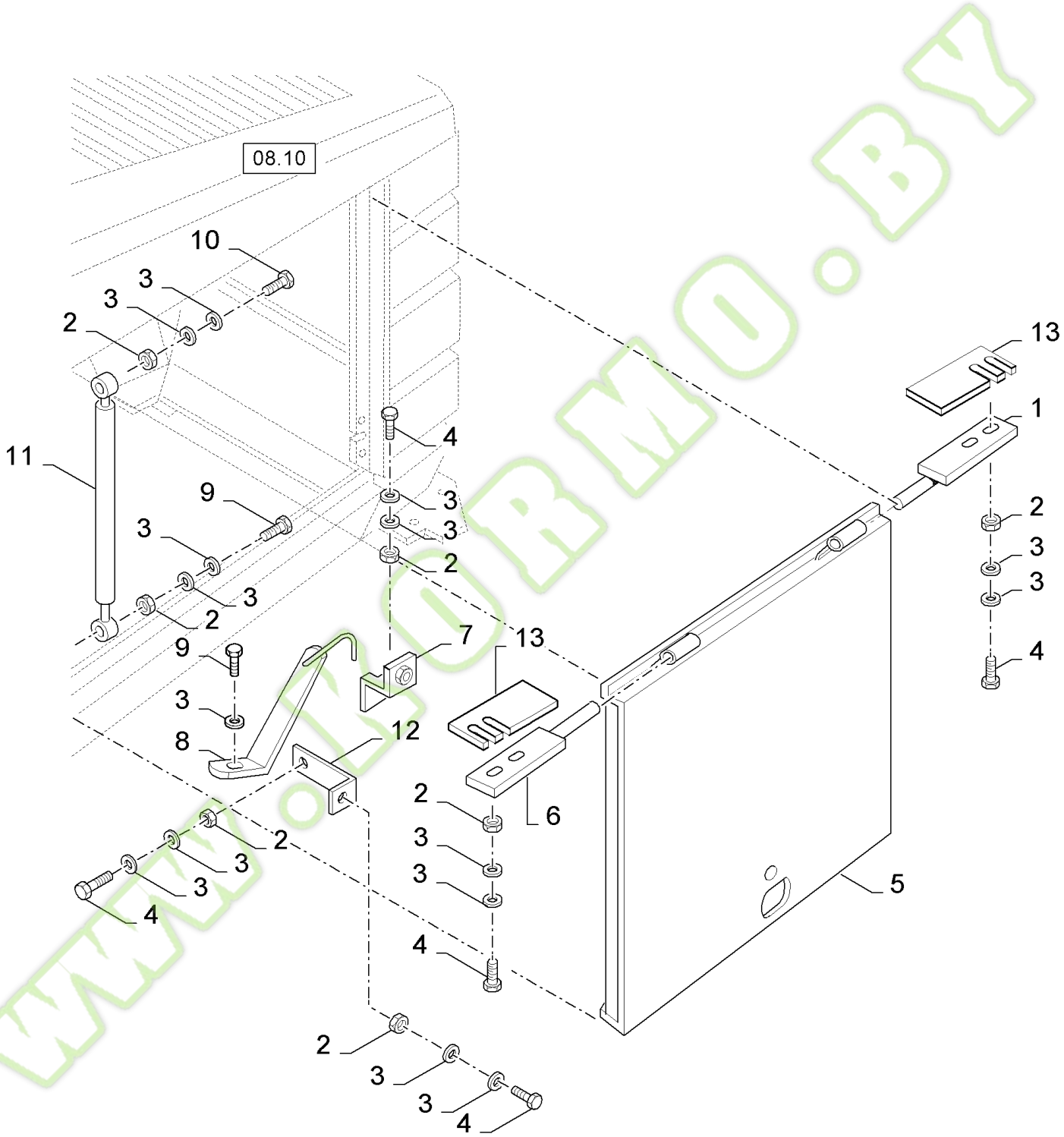

www.ZOBMO.BY

FX50 SELF-PROPELLED FORAGE HARVESTER (10/02-)

08.09(01) SHIELDS, LH

Ref	Part Number	Qty	Description
1	89812798	1	HINGE,
2	89706690	8	NUT, CL 8, M8 x 1.25 x 13.0
3	322358	19	WASHER, LOCK, {PP:80322358} Belleville, M8, 8MM
4	80120104	8	SCREW, M8x20
5	84432137	1	SHIELD,
6	89812799	1	HINGE,
7	84015292	1	LOCK,
8	84001908	1	SUPPORT,
9	43128	2	SCREW, {PP:80043128} Hex, M8 x 30, 8.8, Cap, HH, CL 8.8, M8 x 1.25 x 30
10	120106	1	SCREW, {PP:80120106} Hex, M8 x 40, 8.8, Full Thd, Hex, M8 x 40, 8.8, Full Thd
11	84015664	1	SHOCK ABSORBER,
12	84035131	1	BRACKET,
13	84071345	2	SHIM,

WWW.KOBMO.BY

08.10(01) SHIELDS, ENGINE

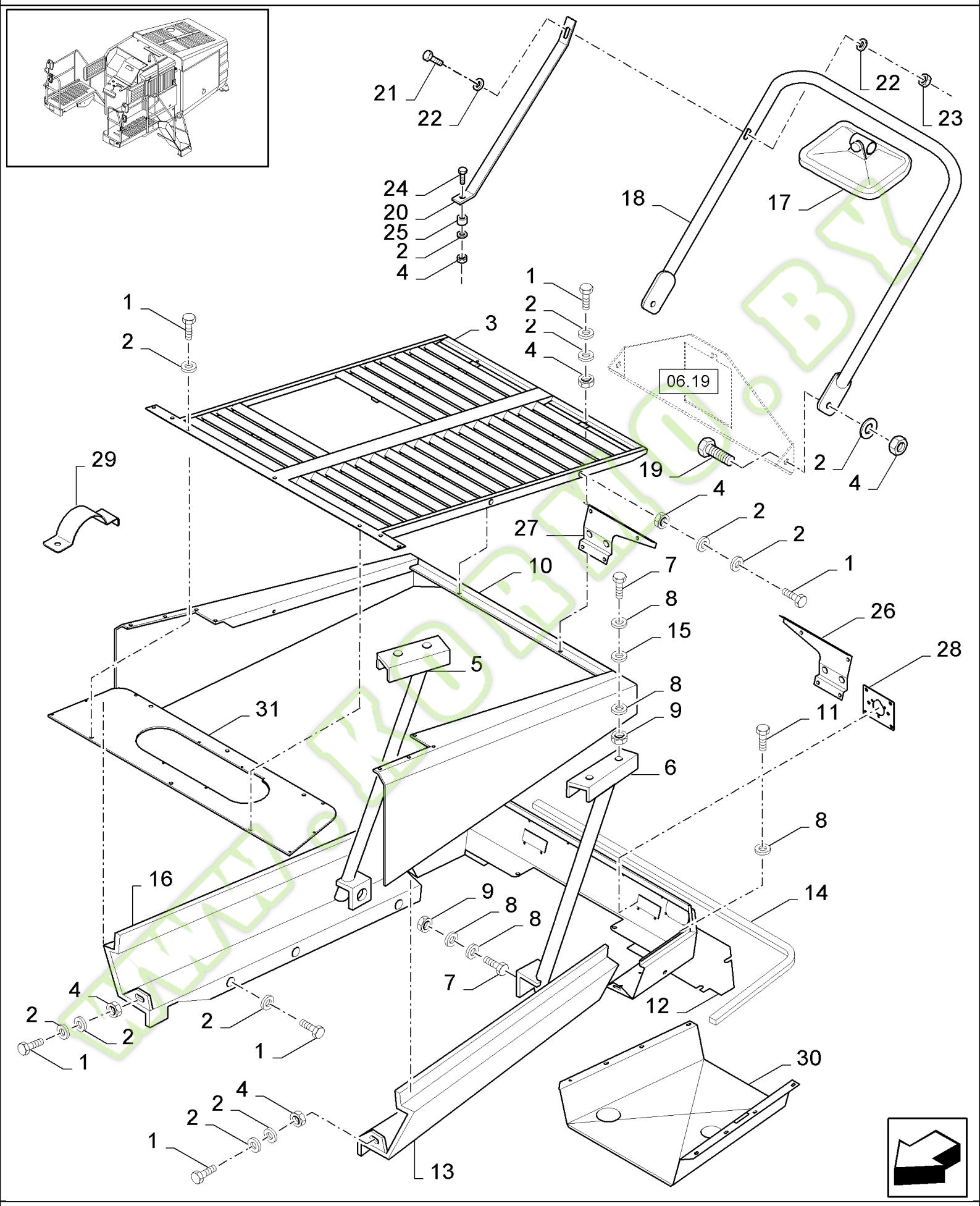

FX50 SELF-PROPELLED FORAGE HARVESTER (10/02-)

08.10(01) SHIELDS, ENGINE

Ref	Part Number	Qty	Description
1	80120104	21	SCREW, M8x20
2	322358	33	WASHER, LOCK, {PP:80322358} Belleville, M8, 8MM
3	84076176	1	GRILLE,
4	89706690	12	NUT, CL 8, M8 x 1.25 x 13.0
5	84434029	1	SUPPORT, , FOR FX30-40-50 ONLY
5	84052841	1	SUPPORT, , FOR FX60 ONLY
6	84434013	1	SUPPORT, , FOR FX30-40-50 ONLY
6	84052835	1	SUPPORT, , FOR FX60 ONLY
7	43140	6	BOLT, {PP:80043140} Hex, M10 x 30, 8.8, M10x30
8	140045	20	WASHER, LOCK, {PP:80140045} Belleville, M10, 10MM
9	100016	6	NUT, {PP:80100016} M10, Cl 8, 10MM
10	84073284	1	PLATE,
11	120109	6	SCREW, {PP:80120109} Hex, M10 x 20, 8.8, Full Thd, M10x20
12	84434033	1	GUARD, , NOT FOR NA
12	84446571	1	GUARD, , FOR NA ONLY
13	84001904	1	PROFILE,
14	84056062	AR	SEAL PROTECTION, L=6000MM
15	378244	AR	WASHER, LOCK, {PP:80378244} 10MM
16	84001905	1	PROFILE,
17	437650	1	MIRROR, REAR-VIEW, {PP:80437650} , FOR NA ONLY
18	447006	1	SUPPORT, {PP:80447006} , FOR NA ONLY
20	84989435	2	SUPPORT, , FOR NA ONLY
21	43117	2	SCREW, {PP:80043117} Hex, M6 x 30, 8.8, M6x30
22	140045	4	WASHER, LOCK, {PP:80140045} Belleville, M10, 6MM
23	353308	2	NUT, {PP:80353308} M6 x 1, Cl 8, M6
24	43130	2	SCREW, {PP:80043130} Hex, M8 x 50, 8.8, M8x50
25	84064463	2	BUSHING,
26	84434015	1	PLATE, LH
27	84434012	1	PLATE, RH
28	84434010	1	PLATE,
29	84435832	4	CLAMP,
30	84434269	1	GUARD, , FOR FX30-40-50 ONLY
30	84434832	1	GUARD, , FOR FX60 ONLY
31	84073308	1	PLATE,
19	16043224	2	SCREW, Hex, M8 x 16, 8.8, Full Thd, M8x16

www.KUBMO.BY

08.11(01) REAR SHIELDS

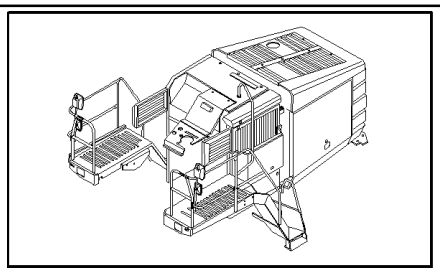

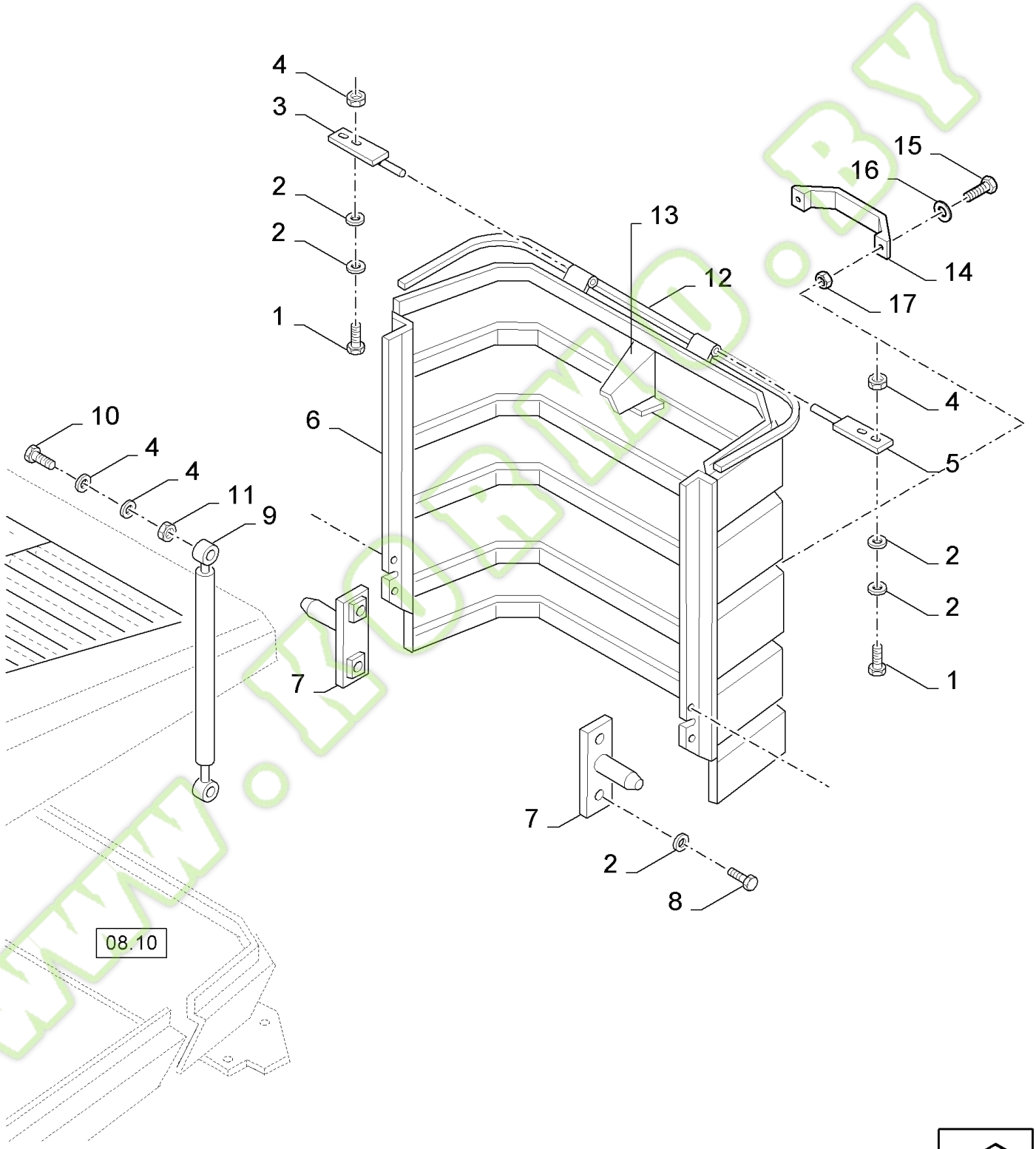

www.KOBMO.BY

FX50 SELF-PROPELLED FORAGE HARVESTER (10/02-)

08.11(01) REAR SHIELDS

Ref	Part Number	Qty	Description
1	80120104	4	SCREW, M8x20
2	322358	10	WASHER, LOCK, {PP:80322358} Belleville, M8, 8MM
3	89812799	1	HINGE,
4	89706690	4	NUT, CL 8, M8 x 1.25 x 13.0
5	89812798	1	HINGE,
6	84433410	1	GUARD,
7	84001228	2	BRACKET,
9	89814770	1	SHOCK ABSORBER,
10	43128	2	SCREW, {PP:80043128} Hex, M8 x 30, 8.8, Cap, HH, CL 8.8, M8 x 1.25 x 30
11	100067	2	NUT, {PP:80100067} M8 x 1.25", Cl 8, M8
12	84056062	AR	SEAL PROTECTION, L=6000MM
13	84437037	1	SUPPORT,
14	89837395	1	HANDLE,
15	80043118	2	SCREW, Cap, HH, CL 8.8, M6 x 1 x 40
16	322357	2	WASHER, LOCK, {PP:80322357} Belleville, M6, Belleville, M6
17	9706755	2	NUT, {PP:89706755} M6, Cl 8, M6
8	16043224	4	SCREW, Hex, M8 x 16, 8.8, Full Thd, M8x16

www.KOBMO.BY

08.12(01) ROTARY SCREEN, SHIELDS, LH

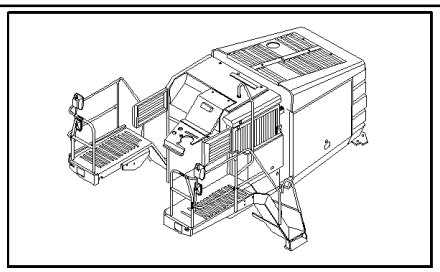

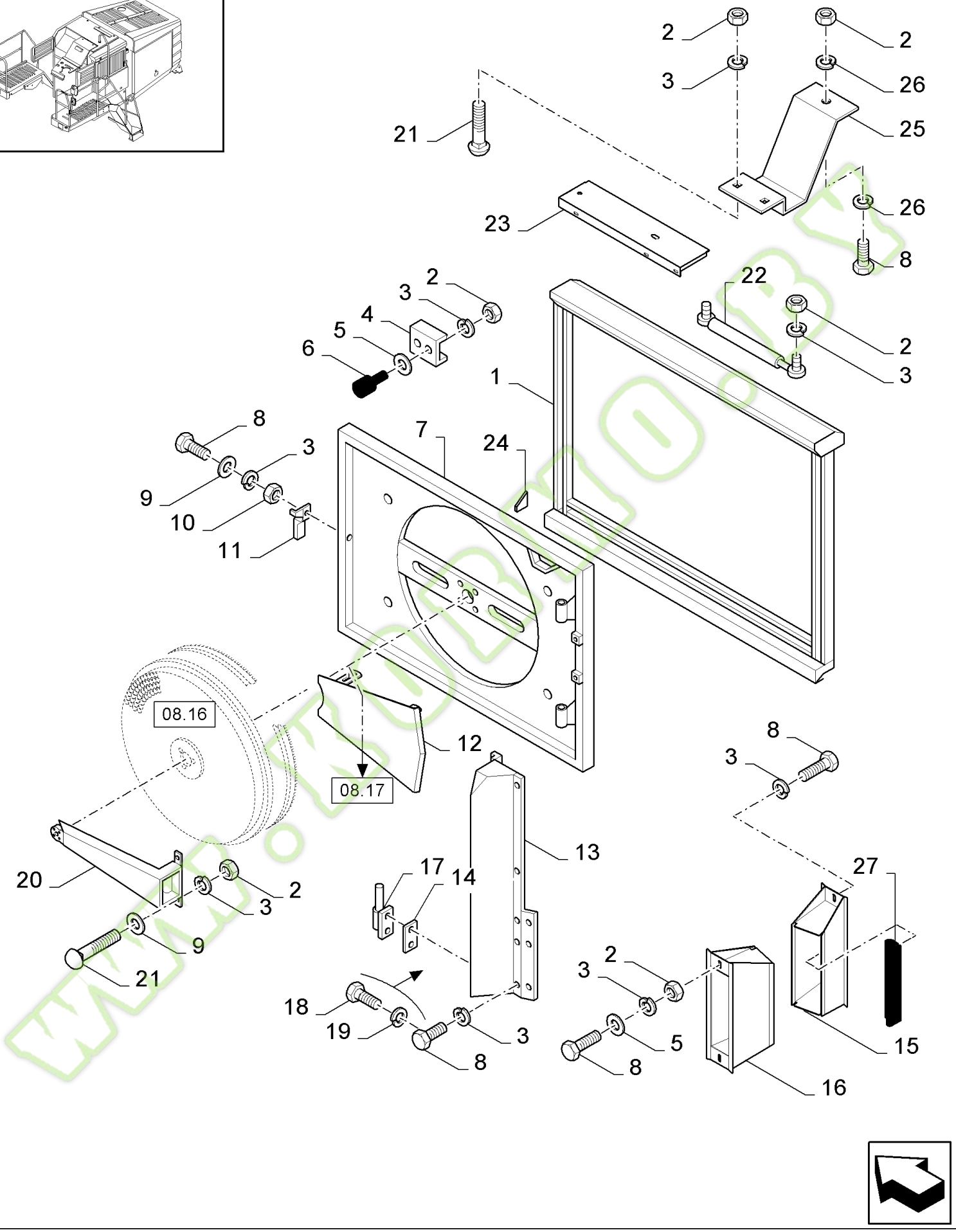

FX50 SELF-PROPELLED FORAGE HARVESTER (10/02-)

08.12(01) ROTARY SCREEN, SHIELDS, LH

Ref	Part Number	Qty	Description
1	84334667	1	FRAME,
2	89706690	AR	NUT, CL 8, M8 x 1.25 x 13.0
3	322358	AR	WASHER, LOCK, {PP:80322358} Belleville, M8, 8MM
4	84022302	2	SUPPORT,
5	140042	AR	WASHER, LOCK, {PP:80140042} M10 x 34 x 3, 10MM
6	84023516	2	SHOCK ABSORBER,
7	84062434	1	DOOR,
8	80120104	6	SCREW, M8x20
9	378243	3	WASHER, {PP:80378243} 8MM
10	100067	1	NUT, {PP:80100067} M8 x 1.25", Cl 8, M8
11	84062306	1	HANDLE,
12	84435758	1	SHIELD,
13	84334114	1	SHIELD,
14	84062404	AR	SHIM,
15	84806133	1	TUBE, , FOR FX60 ONLY
16	84806138	1	CASE, , FOR FX60 ONLY
17	84021281	2	HINGE,
18	43140	4	BOLT, {PP:80043140} Hex, M10 x 30, 8.8, M10x30, FOR NA ONLY
19	140045	4	WASHER, LOCK, {PP:80140045} Belleville, M10, 10MM
20	84031690	1	DUCT, AIR,
21	120037	AR	BOLT, {PP:80120037} Short NK, M8 x 20, Cl8.8, Full Thd, M8x20
22	9812214	1	SHOCK ABSORBER, {PP:89812214}
23	84442295	1	PLATE,
24	84001344	AR	PLATE, COVER,
25	84441908	1	SUPPORT,
26	412650	AR	WASHER, LOCK, {PP:80412650} Belleville, M8, 8MM
27	84056063	AR	SEAL PROTECTION, L=6000MM

www.KOMO.BY

08.13(01) ROTARY SCREEN, SHIELDS, RH

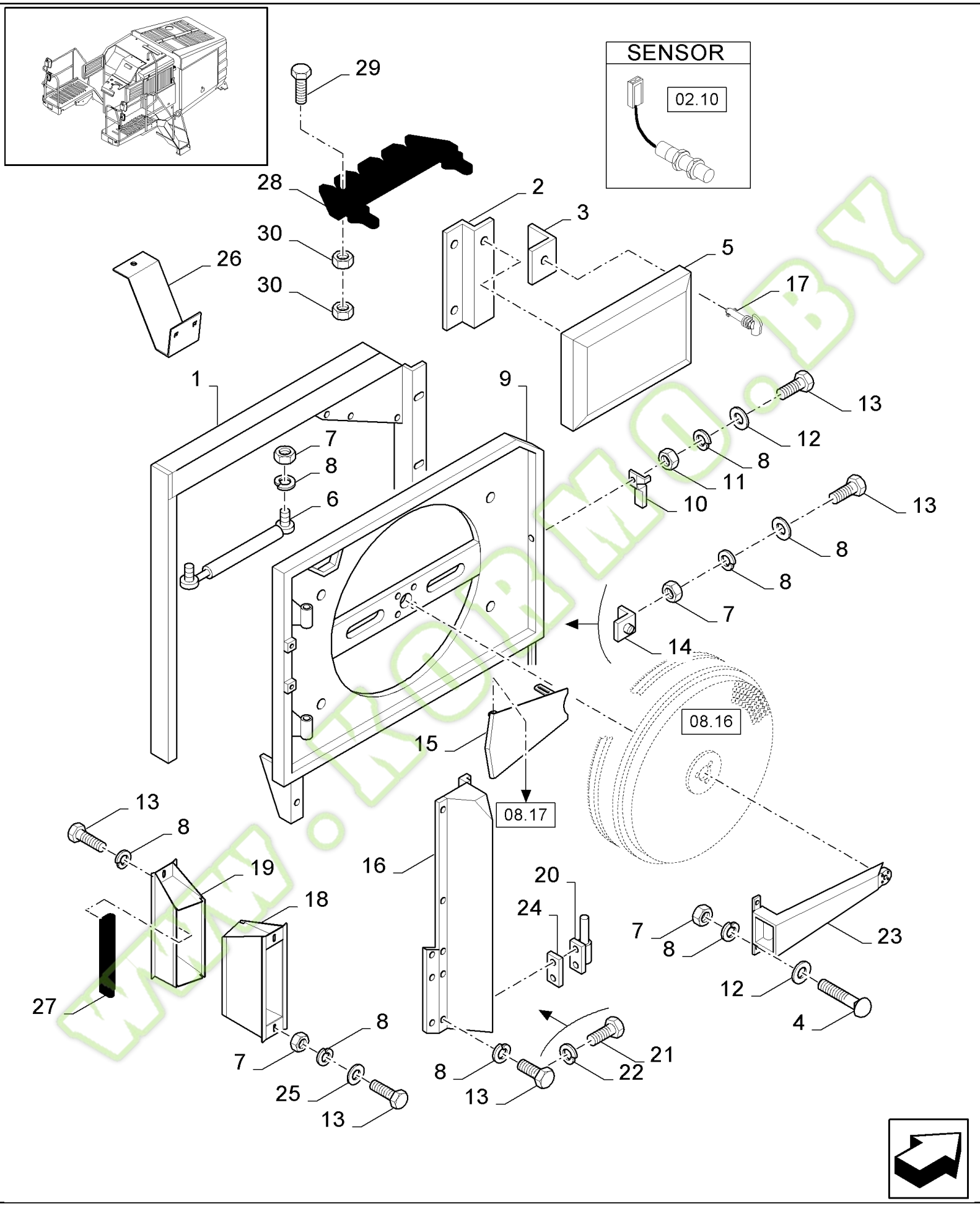

FX50 SELF-PROPELLED FORAGE HARVESTER (10/02-)

08.13(01) ROTARY SCREEN, SHIELDS, RH

Ref	Part Number	Qty	Description
1	84434723	1	FRAME,
2	84002398	1	BRACKET,
3	84002396	1	BRACKET,
4	120037	2	BOLT, {PP:80120037} Short NK, M8 x 20, Cl8.8, Full Thd, M8x20
5	84002404	1	COVER,
6	9812214	1	SHOCK ABSORBER, {PP:89812214}
7	89706690	9	NUT, CL 8, M8 x 1.25 x 13.0
8	322358	9	WASHER, LOCK, {PP:80322358} Belleville, M8, 8MM
9	84062433	1	DOOR,
10	84062307	1	HANDLE,
11	100067	1	NUT, {PP:80100067} M8 x 1.25", Cl 8, M8
12	378243	AR	WASHER, {PP:80378243} 8MM
13	80120104	7	SCREW, M8x20
14	84015292	1	LOCK,
15	84435758	1	SHIELD,
16	84334115	1	SHIELD,
17	9831581	1	LOCK, {PP:89831581}
18	84806138	1	CASE, , FOR FX60 ONLY
19	84806133	1	TUBE, , FOR FX60 ONLY
20	84021282	2	HINGE,
21	43140	4	BOLT, {PP:80043140} Hex, M10 x 30, 8.8, M10x30, FOR FX60 ONLY
22	140045	4	WASHER, LOCK, {PP:80140045} Belleville, M10, 10MM
23	84031690	1	DUCT, AIR,
24	84062404	3	SHIM,
25	140042	2	WASHER, LOCK, {PP:80140042} M10 x 34 x 3,
26	84442881	1	SUPPORT,
27	84056063	1	SEAL PROTECTION, L=6000MM
28	52367	1	UTILITY HOLDER, {PP:80052367}
29	80536887	4	SCREW, SHEAR
30	9706755	8	NUT, {PP:89706755} M6, Cl 8, M6

www.KOMO.BY

08.14(01) ROTARY SCREEN, SHIELDS, LH

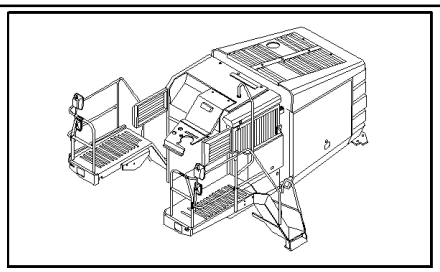

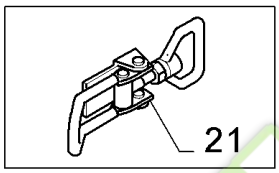

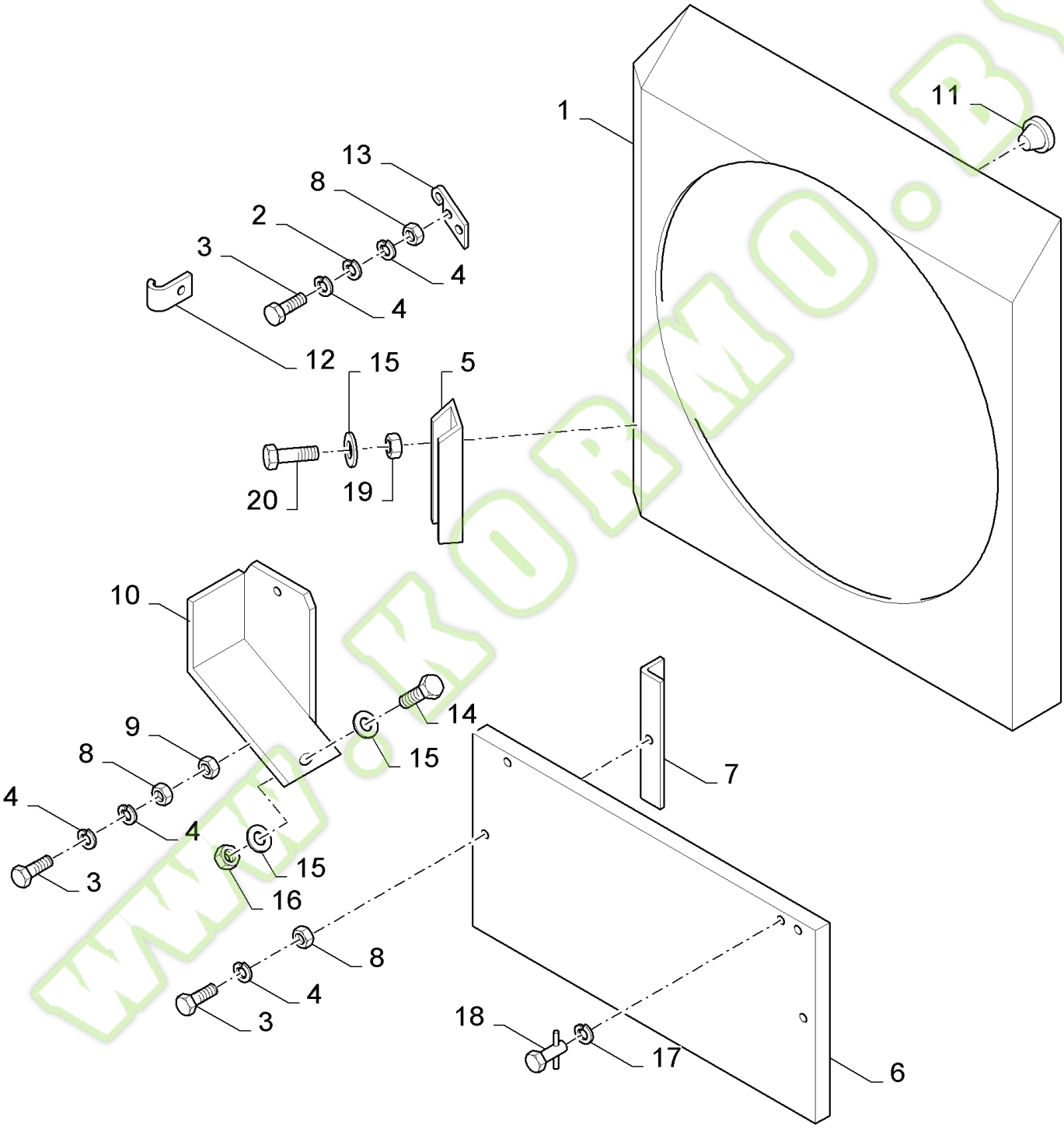

www.KOBMO.BY

FX50 SELF-PROPELLED FORAGE HARVESTER (10/02-)

08.14(01) ROTARY SCREEN, SHIELDS, LH

Ref	Part Number	Qty	Description
1	84062270	1	DOOR,
2	378243	4	WASHER, {PP:80378243}
3	80120104	10	SCREW, M8x20
4	322358	20	WASHER, LOCK, {PP:80322358} Belleville, M8, 8MM
5	89837395	1	HANDLE,
6	84057312	1	SHIELD,
7	84002727	2	BRACKET,
8	89706690	8	NUT, CL 8, M8 x 1.25 x 13.0
9	100067	2	NUT, {PP:80100067} M8 x 1.25", Cl 8, M8
10	84442948	1	PLATE, COVER,
11	331233	AR	PLUG, {PP:80331233}
12	84429117	1	HOOK,
13	84023084	1	HOOK,
14	120100	1	BOLT, {PP:80120100} Hex, M6 x 20, 8.8, M6x20
15	322357	2	WASHER, LOCK, {PP:80322357} Belleville, M6, Belleville, M6
16	100004	1	NUT, WING, {PP:80100004} M6
17	9514605	AR	RING, LOCKING, {PP:89514605}
18	89514603	AR	LOCK,
19	9706755	2	NUT, {PP:89706755} M6, Cl 8, M6
20	80120099	2	SCREW, Hex, M6 x 16, 8.8, M6x16
21	84043033	1	CLAMP,

www.KOBMO.BY

08.15(01) ROTARY SCREEN, SHIELDS, RH

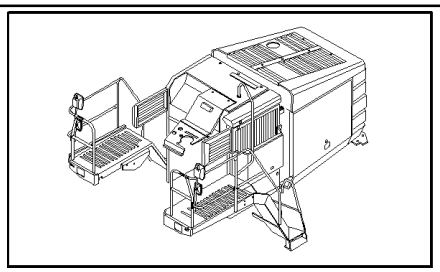

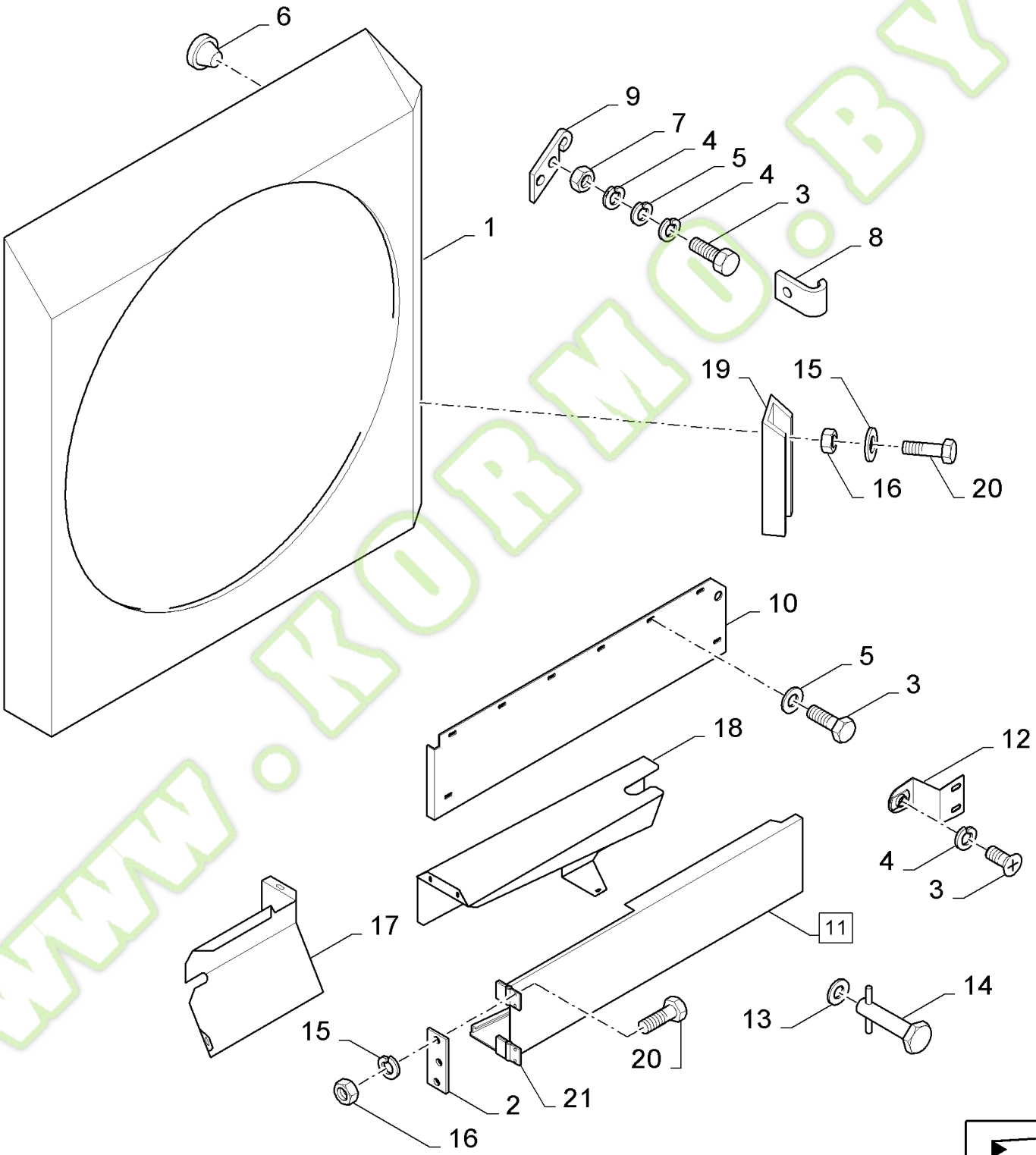

www.KOBMO.BY

FX50 SELF-PROPELLED FORAGE HARVESTER (10/02-)

08.15(01) ROTARY SCREEN, SHIELDS, RH

Ref	Part Number	Qty	Description
1	84062269	1	DOOR,
2	84045345	2	PLATE, COVER,
3	80120104	AR	SCREW, M8x20
4	322358	AR	WASHER, LOCK, {PP:80322358} Belleville, M8, 8MM
5	378243	6	WASHER, {PP:80378243} 8MM
6	331233	AR	PLUG, {PP:80331233}
7	89706690	4	NUT, CL 8, M8 x 1.25 x 13.0
8	84429117	1	HOOK,
9	84023085	1	HOOK,
10	84039179	1	PLATE,
11	84045351	1	DOOR, (21)
12	84045338	1	SUPPORT,
13	9514605	1	RING, LOCKING, {PP:89514605}
14	89514603	1	LOCK,
15	322357	4	WASHER, LOCK, {PP:80322357} Belleville, M6, Belleville, M6
16	9706755	4	NUT, {PP:89706755} M6, Cl 8, M6
17	84334152	1	GUARD, , FOR FX30-40-50 ONLY, BSN C305
17	84448457	1	GUARD, , FOR FX30-40-50 ONLY, ASN D306
17	84039120	1	GUARD, , FOR FX60 ONLY, BSN C305
17	84446424	1	GUARD, , FOR FX60 ONLY, ASN D306
18	84039142	1	PLATE, COVER, , BSN C322
18	84446420	1	PLATE, COVER, , ASN D323
19	89837395	1	HANDLE,
20	80120099	AR	SCREW, Hex, M6 x 16, 8.8, M6x16
21	9833212	2	HINGE, {PP:89833212}

www.KUBMO.BY

08.16(01) ROTARY SCREEN DRIVE

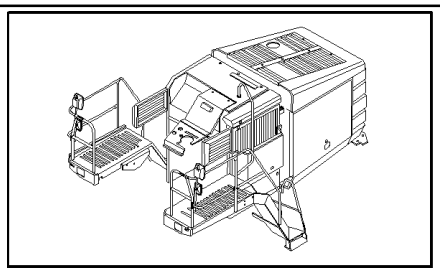

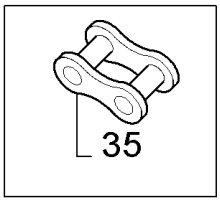

25
23
22
30
23
22
06.10
28
29
27
26
24
23
22
2
1
20
21
18
31
19
17
16
12
13
15
14
10
9
13
12
33
32
11
36
10
2
1
8
7
33
4
3
2
1
6
5
34

WWW.BOBMOBY.COM

FX50 SELF-PROPELLED FORAGE HARVESTER (10/02-)

08.16(01) ROTARY SCREEN DRIVE

Ref	Part Number	Qty	Description
1	80120099	24	SCREW, Hex, M6 x 16, 8.8, M6x16
2	322357	24	WASHER, LOCK, {PP:80322357} Belleville, M6, Belleville, M6
3	9706755	6	NUT, {PP:89706755} M6, Cl 8, M6
4	100095	2	NUT, {PP:80100095} Thin, M16 x 2, Cl 04, M16
5	365018	2	FLANGE, {PP:80365018}
6	362804	2	BEARING, BALL, {PP:80362804}
7	140048	2	WASHER, LOCK, {PP:80140048} Belleville, M16, 16MM
8	753576	2	SUPPORT, {PP:80753576}
9	84062422	2	COVER,
10	84041694	2	BRUSH,
11	84021441	2	HUB,
12	443898	4	BEARING ASSY, {PP:80443898}
13	370011	4	CIRCLIP, {PP:80370011}
14	84021443	2	HOUSING, BEARING,
15	84017221	2	BUSHING,
16	100016	8	NUT, {PP:80100016} M10, Cl 8, M10
17	140045	8	WASHER, LOCK, {PP:80140045} Belleville, M10, 10MM
18	43140	8	BOLT, {PP:80043140} Hex, M10 x 30, 8.8, M10x30
19	84041168	2	SPROCKET, DRIVEN,
20	86508584	2	SCREW, Hex, M16 x 170, 8.8, M16x170
21	84041170	2	CHAIN, (35)
22	89706690	10	NUT, CL 8, M8 x 1.25 x 13.0
23	322358	10	WASHER, LOCK, {PP:80322358} Belleville, M8, 8MM
24	84026005	2	SPROCKET, DRIVEN,
25	120037	4	BOLT, {PP:80120037} Short NK, M8 x 20, Cl8.8, Full Thd, M8x20
26	84038950	2	MOTOR, ELECTRIC,
27	84002282	1	HARNESS, WIRE,
28	84041166	2	SUPPORT,
29	84041942	1	SHIELD, RH
29	84041943	1	SHIELD, LH
30	120109	AR	SCREW, {PP:80120109} Hex, M10 x 20, 8.8, Full Thd, M8x20
31	84041177	2	BUSHING,
32	84062380	2	PLATE, RETAINING,
33	378246	AR	WASHER, {PP:80378246} 16MM
34	100039	2	NUT, {PP:80100039} M16 x 2, Cl 8, M16
35	362816	AR	CONNECTOR, HYD., {PP:80362816}
36	84062382	2	PLATE, COVER,

www.KORMO.BY

08.17(01) CLEANING BRUSH

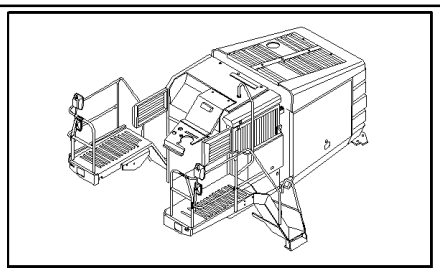

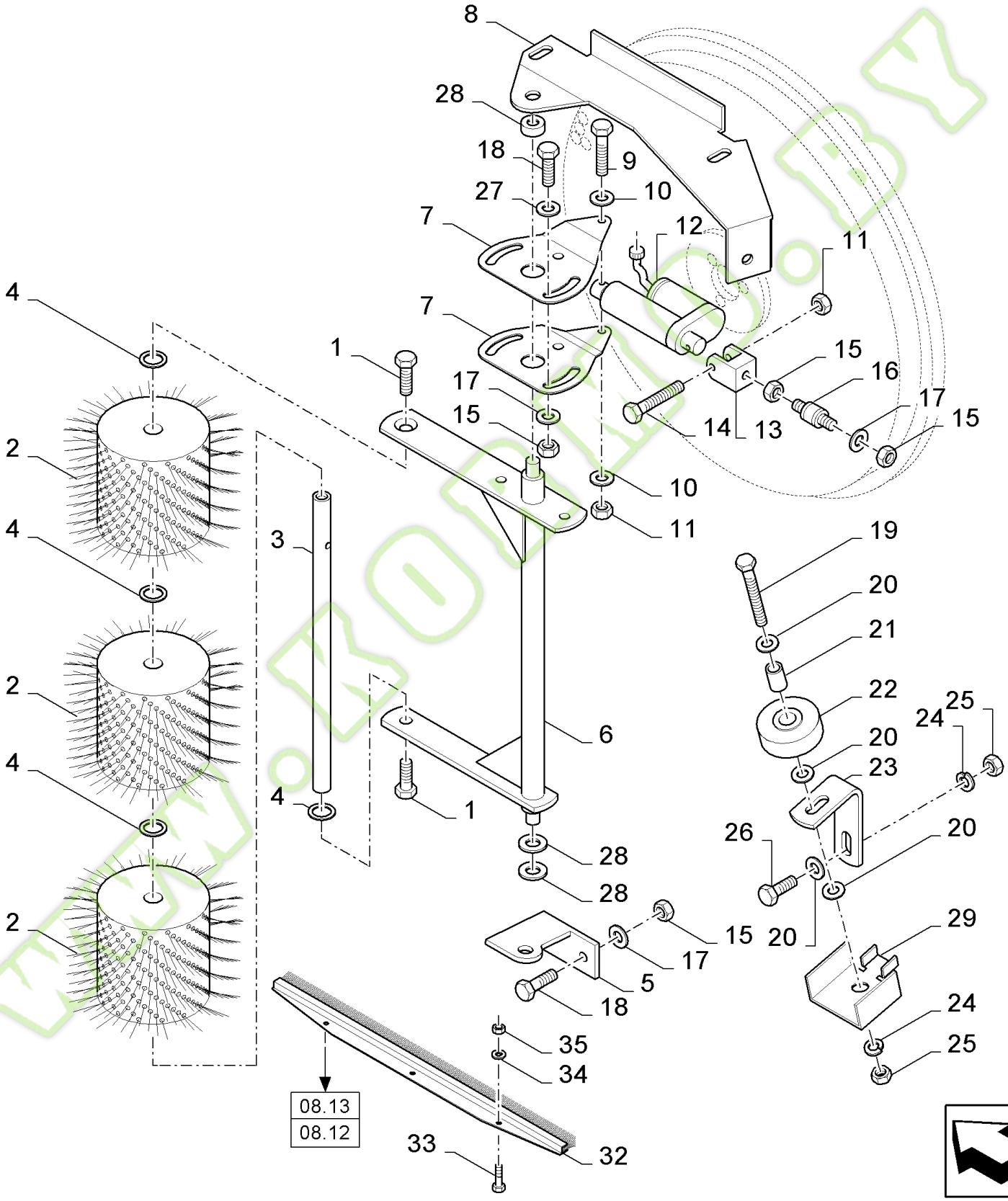

FX50 SELF-PROPELLED FORAGE HARVESTER (10/02-)

08.17(01) CLEANING BRUSH

Ref	Part Number	Qty	Description
1	393698	4	SCREW, {PP:80393698} Hex Soc Flat Hd, M10 x 25, 8.8,
2	84041623	6	BRUSH,
3	84032419	2	SHAFT,
4	84042957	6	WASHER,
5	84077353	2	BRACKET,
6	84032410	2	SUPPORT,
7	84041713	4	PLATE, COVER,
8	84073428	1	SUPPORT, LH
8	84073430	1	SUPPORT, RH
9	120056	2	SCREW, {PP:80120056} Hex, M6 x 50, 8.8, M6X50
10	140015	4	WASHER, {PP:80140015} 6MM
11	353308	4	NUT, {PP:80353308} M6 x 1, Cl 8, M6
12	84077516	2	ACTUATOR,
13	84026054	2	SUPPORT,
14	80120102	2	SCREW, M6X40
15	89706690	14	NUT, CL 8, M8 x 1.25 x 13.0
16	84057804	2	DAMPER,
17	322358	12	WASHER, LOCK, {PP:80322358} Belleville, M8, 8MM
18	80120104	10	SCREW, M8X20
19	120069	4	SCREW, {PP:80120069} Hex, M10 x 50, 8.8, M10X50
20	378244	16	WASHER, LOCK, {PP:80378244} 10MM
21	921989	4	SPACER, {PP:80921989}
22	84041753	4	ROLLER,
23	84041762	4	BRACKET,
24	140045	8	WASHER, LOCK, {PP:80140045} Belleville, M10, 10MM
25	100016	8	NUT, {PP:80100016} M10, Cl 8, M10
26	120109	4	SCREW, {PP:80120109} Hex, M10 x 20, 8.8, Full Thd, M10X20
27	378243	6	WASHER, {PP:80378243} 8MM
28	378245	AR	WASHER, {PP:80378245} 12MM
29	84062383	4	SHIELD,
32	84432110	2	BRUSH,
33	86585706	6	SCREW, Cross Pan Hd, M4 x 10, M4x10
34	322355	6	WASHER, LOCK, {PP:80322355} Belleville, M4, 4MM
35	100012	6	NUT, {PP:80100012} M4, Cl 8, M4

WWW.NOBEMO.BY

08.51(01) DECALS - FOR NA ONLY

1

3

4

2

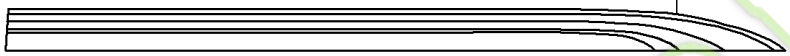

11

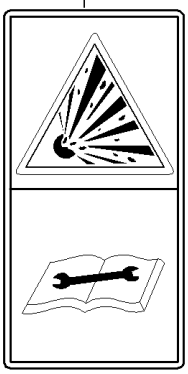

5

6

7

8

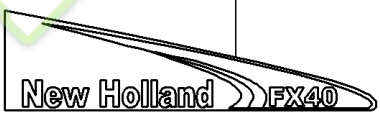

9

10

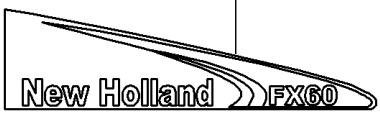

12

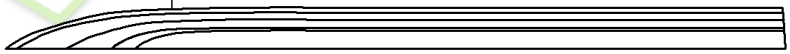

13

www.KOBMO.BY

FX50 SELF-PROPELLED FORAGE HARVESTER (10/02-)

08.51(01) DECALS - FOR NA ONLY

Ref	Part Number	Qty	Description
1	86531886	1	DECAL,
2	84444218	1	DECAL,
3	86630510	3	DECAL,
4	84002583	1	EMBLEM, , BSN C305
4	86992672	1	EMBLEM, , ASN D306
5	84444209	1	DECAL,
6	84444210	1	DECAL,
7	84444211	1	DECAL,
8	84444212	1	DECAL,
9	84444215	1	DECAL,
10	84444216	1	DECAL,
11	84005363	3	DECAL,
12	84444217	1	DECAL,
13	86631200	1	DECAL,

www.KOBMO.BY

08.52(01) DECALS - FOR NA ONLY

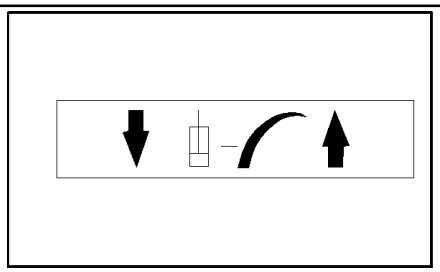

1

2

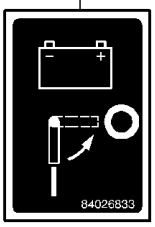

3

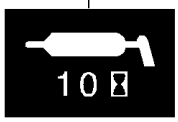

4

5

6

7

8

9

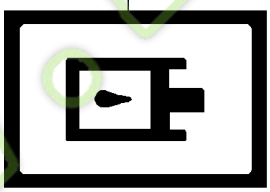

11

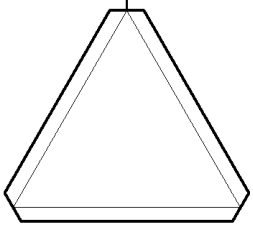

12

13

14

15

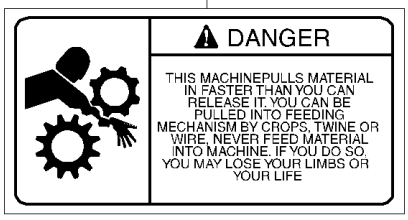

FX50 SELF-PROPELLED FORAGE HARVESTER (10/02-)

08.52(01) DECALS - FOR NA ONLY

Ref	Part Number	Qty	Description
1	86531883	2	DECAL,
2	84026833	1	DECAL,
3	266578	1	DECAL, {PP:80266578}
4	86541948	1	DECAL,
5	688443	2	DECAL, {PP:80688443}
6	87015483	1	DECAL,
7	86622073	1	DECAL,
8	9806879	1	DECAL, {PP:89806879}
9	922220	2	DECAL, {PP:80922220}
11	86547710	1	WARNING TRIANGLE,
12	174117	1	DECAL, {PP:80174117}
13	86626958	4	DECAL,
14	86630943	5	DECAL,
15	9806448	1	DECAL, {PP:89806448}

WWW.KOBMO.BY

08.53(01) DECALS - FOR NA ONLY

1

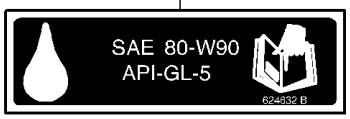

2

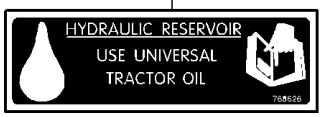

3

4

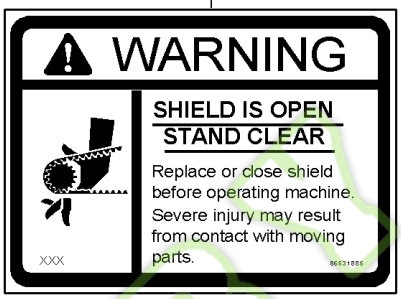

5

6

7

8

9

METALERT *III*

10

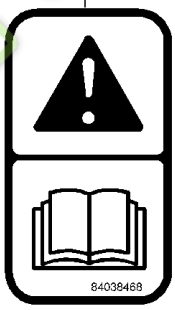

11

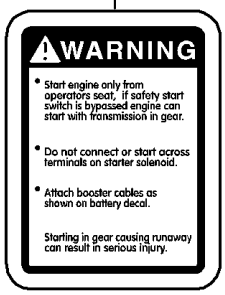

12

13

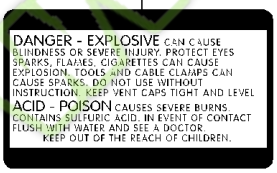

14

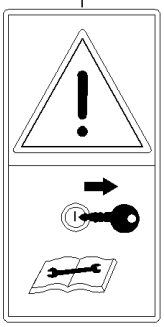

15

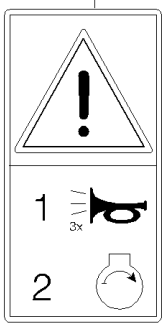

16

HydroLoc

www.ROBMS.BY

FX50 SELF-PROPELLED FORAGE HARVESTER (10/02-)

08.53(01) DECALS - FOR NA ONLY

Ref	Part Number	Qty	Description
1	624632	5	DECAL, {PP:80624632}
2	768626	2	DECAL, {PP:80768626}
3	849472	1	DECAL, {PP:80849472}
4	86626959	1	DECAL,
5	164372	1	DECAL, {PP:80164372}
6	256302	1	DECAL, {PP:80256302}
7	86534702	2	DECAL,
8	84015359	1	DECAL,
9	84039546	2	DECAL,
10	84038468	1	DECAL,
11	E1NN16A901EA	1	DECAL, {PP:83929338}
12	84038581	1	DECAL,
13	84038582	1	DECAL,
14	84012893	1	DECAL,
15	84012892	1	DECAL,
16	84444219	1	DECAL,

www.KOBMO.BY

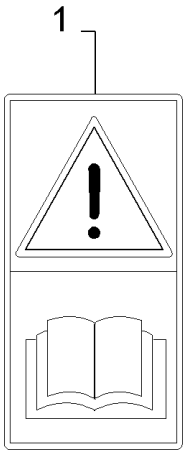
1

2

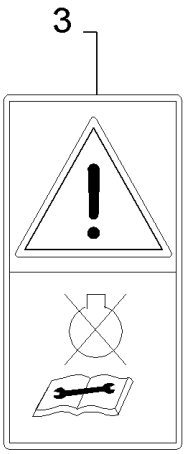
3

4

5

6

7

8

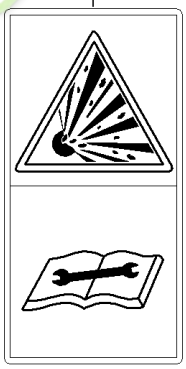
9

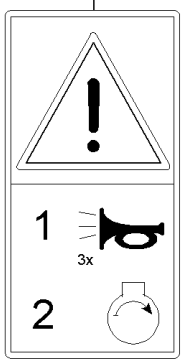

10

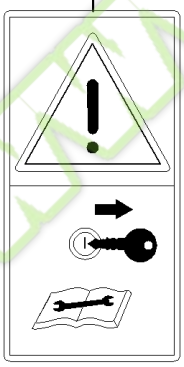
11

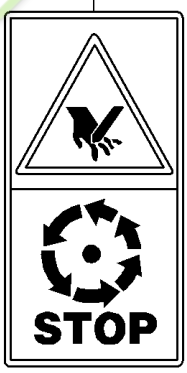

12

13

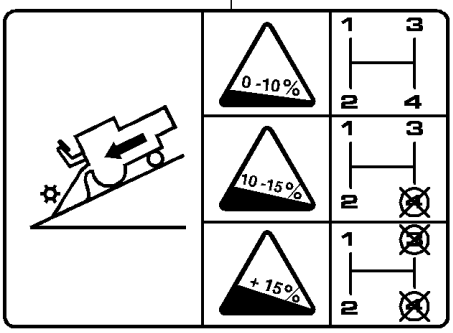

14

FX50 SELF-PROPELLED FORAGE HARVESTER (10/02-)

08.54(01) DECALS

Ref	Part Number	Qty	Description
1	84004731	AR	DECAL,
2	84004732	AR	DECAL,
3	84004733	AR	DECAL,
4	84004734	AR	DECAL,
5	84004735	AR	DECAL,
6	84004738	AR	DECAL,
7	84004742	AR	DECAL,
8	84011346	AR	DECAL,
9	84005363	AR	DECAL,
10	84012892	AR	DECAL,
11	84012893	AR	DECAL, BACKGROUND TRANSPARENT
11	84004744	AR	DECAL, BACKGROUND YELLOW
12	84014117	AR	DECAL,
13	84015359	AR	DECAL,
14	80426052	AR	DECAL,

www.KOBMO.BY

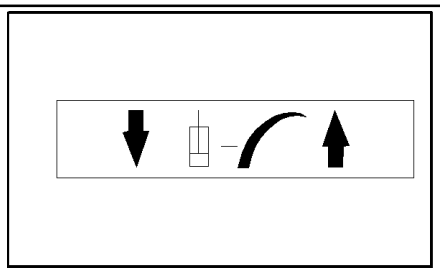

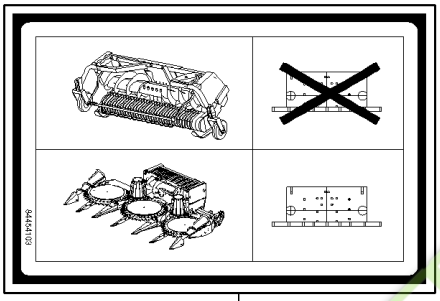

16

1

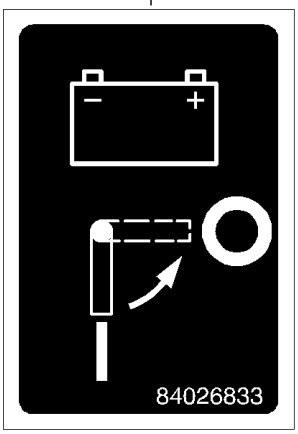

2

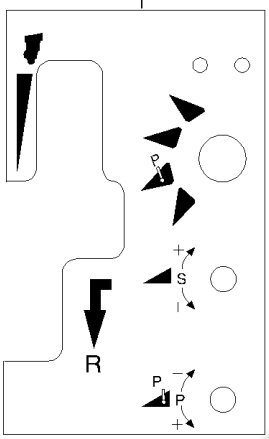

3

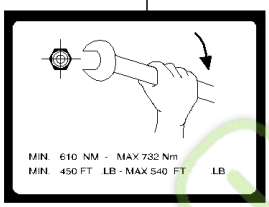

4

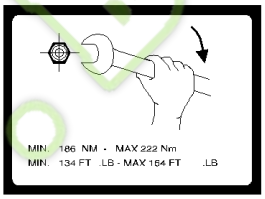

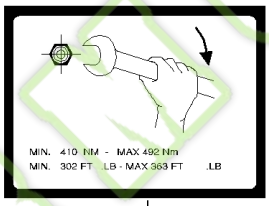

5

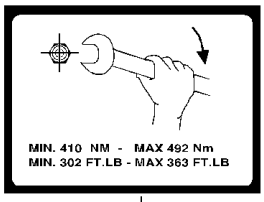

6

7

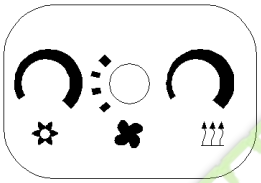

8

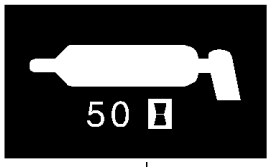

9

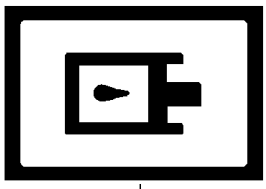

10

11

12

15

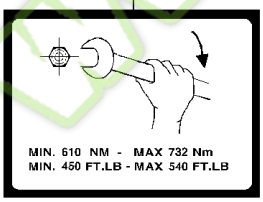

14

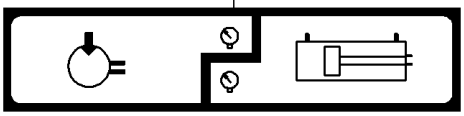

13

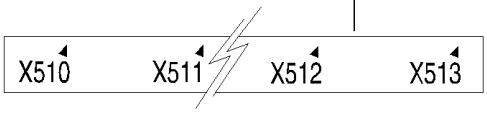

FX50 SELF-PROPELLED FORAGE HARVESTER (10/02-)

08.55(01) DECALS

Ref	Part Number	Qty	Description
1	84026833	AR	DECAL,
2	84018052	AR	DECAL,
3	84011653	AR	DECAL, , BSN C305
4	84011654	AR	DECAL,
5	84011655	AR	DECAL, , BSN C322
6	84989141	AR	DECAL, , ASN D323
7	9815065	AR	DECAL, {PP:89815065}
8	266578	AR	DECAL, {PP:80266578}
9	266579	AR	DECAL, {PP:80266579}
10	922220	AR	DECAL, {PP:80922220}
11	84001715	AR	DECAL,
12	84001929	AR	DECAL,
13	84002734	AR	DECAL,
14	84431498	AR	DECAL,
15	84989135	AR	DECAL, , ASN D306
16	84454103	AR	DECAL,

www.KOBMO.BY

08.56(01) DECALS

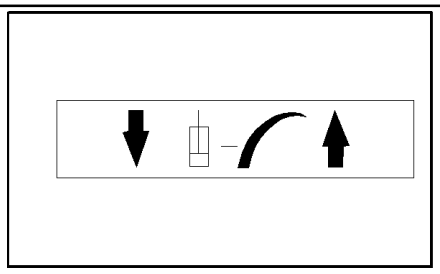

17

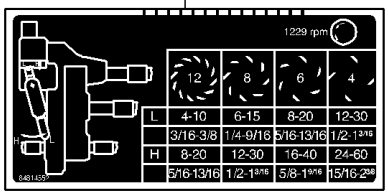

18

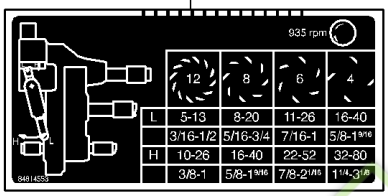

1

2

3

4

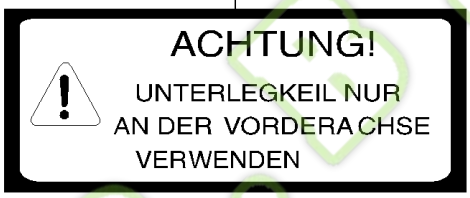

5

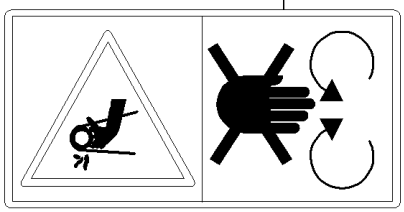

6

7

8

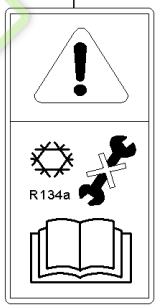

9

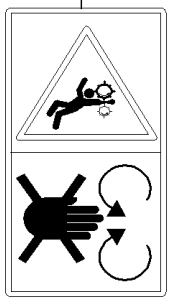

10

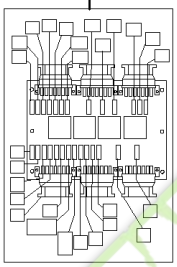

11

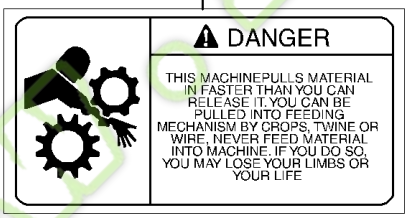

12

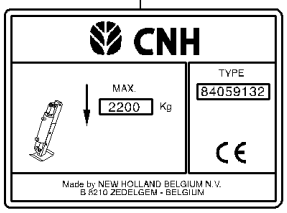

13

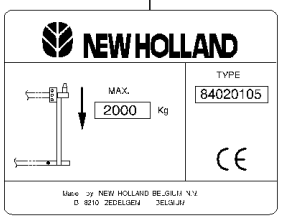

14

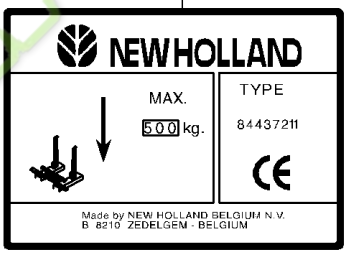

15

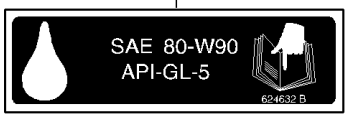

16

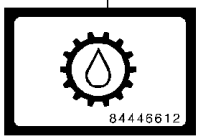

FX50 SELF-PROPELLED FORAGE HARVESTER (10/02-)

08.56(01) DECALS

Ref	Part Number	Qty	Description
1	449973	AR	DECAL, {PP:80449973}
2	84078384	AR	DECAL,
3	84100296	AR	DECAL,
4	449927	AR	DECAL, {PP:80449927}
5	84011345	AR	DECAL,
6	89513272	AR	DECAL,
7	84039535	AR	DECAL,
8	84012596	AR	DECAL,
9	84021304	AR	DECAL,
10	84022555	AR	DECAL,
11	9806448	AR	DECAL, {PP:89806448}
12	84819595	AR	DECAL,
13	84023345	AR	DECAL, 2000Kg
13	84442655	AR	DECAL, 2500Kg
14	NS	AR	NOT SERVICED,
15	624632	AR	DECAL, {PP:80624632}
16	84446612	AR	DECAL,
17	84814552	AR	DECAL,
18	84814553	AR	DECAL,

www.KOBMO.BY

08.57(01) DECALS

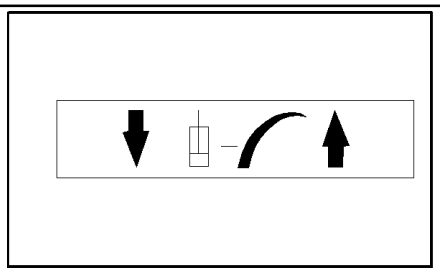

1

2
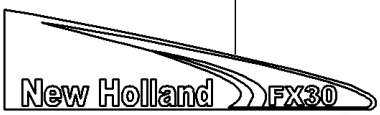

3

4

15

5

6
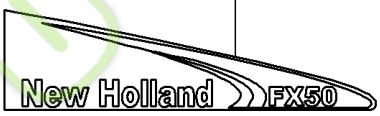

16
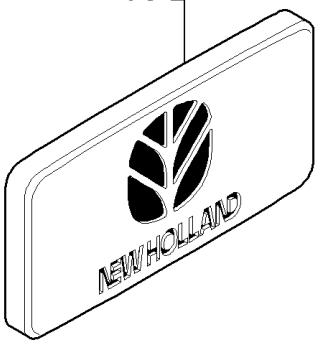

7

8
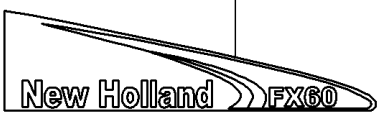

9
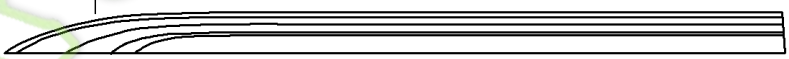

10
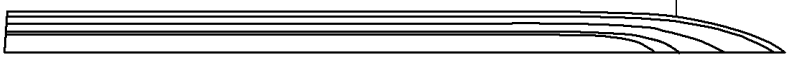

11

12
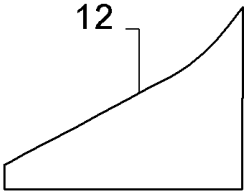

13
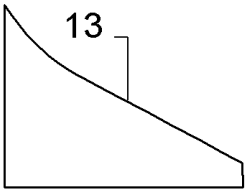

14

www.RORMO.BY

FX50 SELF-PROPELLED FORAGE HARVESTER (10/02-)

08.57(01) DECALS

Ref	Part Number	Qty	Description
1	84444209	1	DECAL,
2	84444210	1	DECAL,
3	84444211	1	DECAL,
4	84444212	1	DECAL,
5	84444213	1	DECAL,
6	84444214	1	DECAL,
7	84444215	1	DECAL,
8	84444216	1	DECAL,
9	84444217	1	DECAL,
10	84444218	1	DECAL,
11	84444219	1	DECAL,
12	84429738	1	DECAL,
13	84429737	1	DECAL,
14	84002583	1	EMBLEM,
15	82031728	AR	DECAL, Branding
16	87802951	1	EMBLEM, , BSN C327
16	87802965	1	EMBLEM, , ASN D328

www.KOBMO.BY

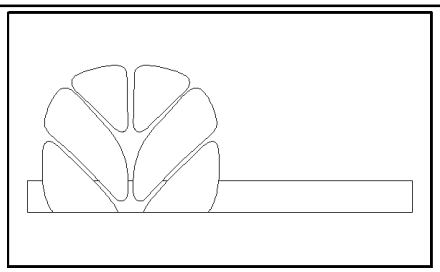

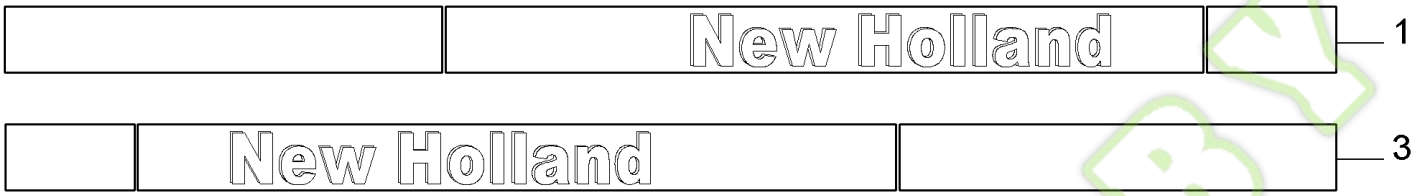

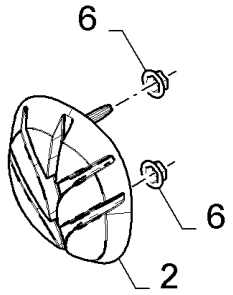

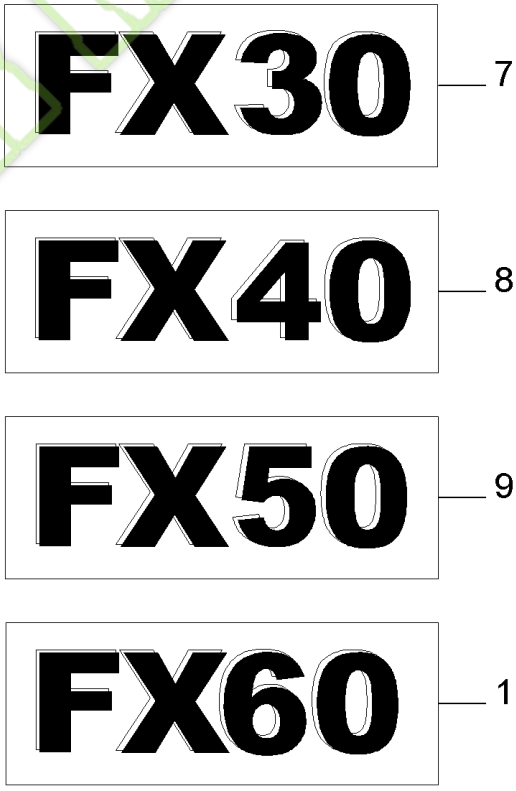

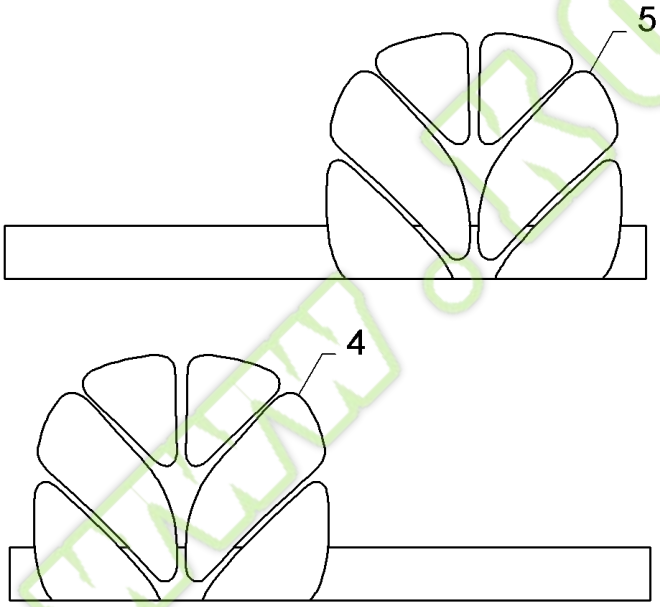

WWW.TROBMO.BY

FX50 SELF-PROPELLED FORAGE HARVESTER (10/02-)

08.58(01) DECALS

Ref	Part Number	Qty	Description
1	84458031	1	DECAL, LH
2	86992672	1	EMBLEM,
3	84458030	1	DECAL, RH
4	84458033	1	DECAL, LH
5	84458032	1	DECAL, RH
6	86625060	2	NUT,
7	84458025	1	DECAL,
8	84458026	1	DECAL,
9	84458028	1	DECAL,
10	84458029	1	DECAL,

WWW.KOBMO.BY

LUBRICATION	**LUBRIFICATRICE**	**LUBRIFICAR**	**SMØRING**
LUBRIFICANTE	**SCHMIERING**	**LUBRIFICANTE**	**SMERING**

SEC. 9

09.01 - 09.15

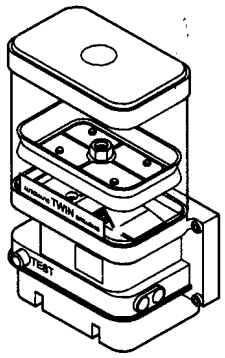

09.02 → 09.06

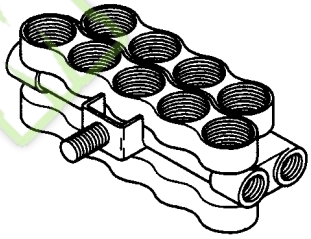

09.07 → 09.14

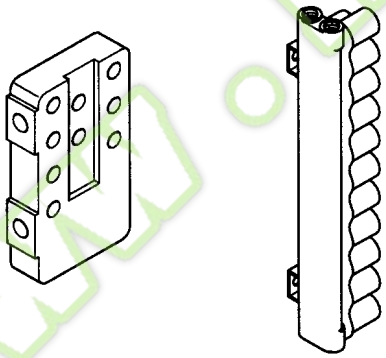

09.15

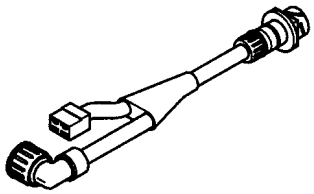

09.16

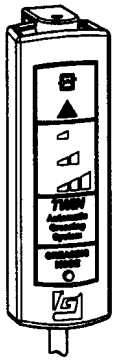

WWW.KOBMO.BY

Ref	Part Number	Qty	Description

www.KOBMO.BY

09.01(01) AUTOMATIC LUBRICATION, TWIN-PUMP

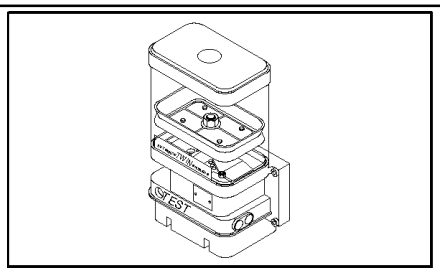

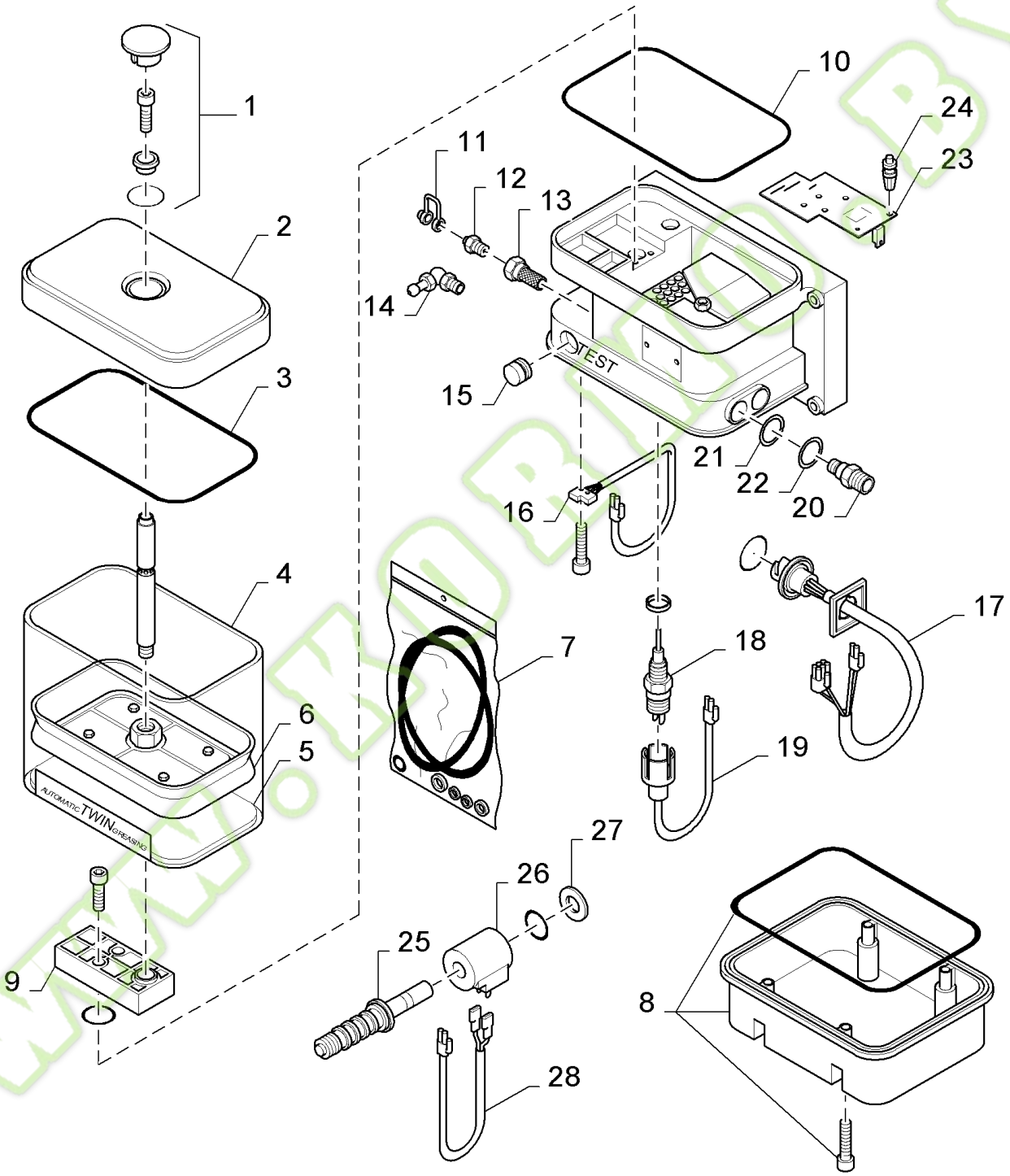

FX50 SELF-PROPELLED FORAGE HARVESTER (10/02-)

09.01(01) AUTOMATIC LUBRICATION, TWIN-PUMP

Ref	Part Number	Qty	Description
	84443956	1	PUMP, ENGINE OIL, (1 to 28), 4L TWIN-PUMP
1	84039107	1	TAB, LOCKING,
2	84039108	1	COVER,
3	84039109	1	O-RING,
4	84053106	1	PIN, , 4L TWIN-PUMP
5	84053107	1	RESERVOIR, HYDRAULIC OIL, , 4L TWIN-PUMP
6	84053108	1	PISTON, , 4L TWIN-PUMP
7	84039113	1	KIT, SEALS,
8	84039114	1	PROTECTING COVER,
9	84039115	1	BLOCK, CONNECTING,
10	84039116	1	O-RING,
11	84039121	1	DUST CAP,
12	84039122	1	CONNECTOR, HYD.,
13	84039123	1	FILTER,
14	84039124	1	NIPPLE, LUBE, 45°
14	84039125	1	NIPPLE, LUBE, 90°
15	84039126	1	PUSH BUTTON,
16	84039127	1	SWITCH, ASSY,
17	84039128	1	HARNESS, WIRE,
18	84039129	1	LEVEL GAUGE CONTROL,
19	84039130	1	HARNESS, WIRE,
20	84039131	2	CONNECTOR, HYD.,
21	84039134	2	O-RING,
22	84039135	2	O-RING,
23	84062355	1	PRINTED CIRCUIT BOARD, 12V
24	84039137	4	CLAMP,
25	84039138	1	VALVE, HYDRAULIC,
26	84039143	1	ELECTROMAGNET,
27	84039144	1	RING,
28	84039145	1	HARNESS, WIRE,

WWW.KOBMO.BY

09.02(01) AUTOMATIC LUBRICATION, MANIFOLDS AND REDUCERS

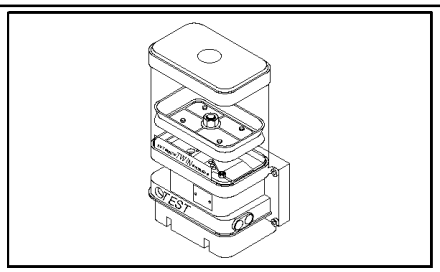

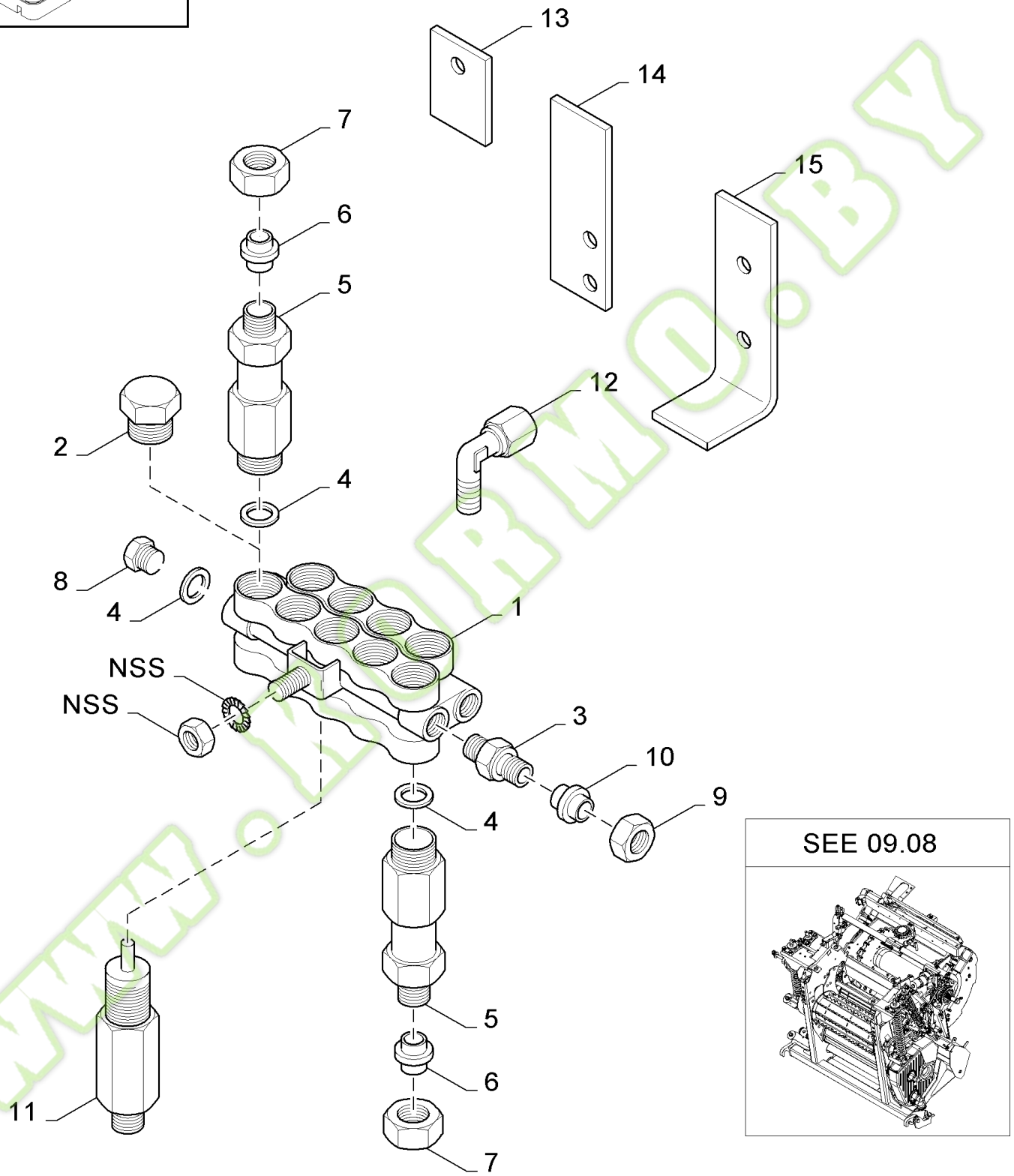

SEE 09.08

www.KOBMOBY

FX50 SELF-PROPELLED FORAGE HARVESTER (10/02-)

09.02(01) AUTOMATIC LUBRICATION, MANIFOLDS AND REDUCERS

Ref	Part Number	Qty	Description
1	84056853	AR	MANIFOLD, 4 Port block, FOR 2WD ONLY
1	84056856	AR	MANIFOLD, 9 Port block
1	84320323	AR	MANIFOLD, , WITHOUT THREATED ROD
1	84056855	AR	MANIFOLD, 12 Port block
1	84817701	AR	MANIFOLD, 18 Port block
1	84320328	AR	MANIFOLD, 21 Port block
1	84807415	AR	MANIFOLD, 22 Port block
2	84039103	AR	PLUG,
3	84037365	AR	CONNECTOR, HYD., 10 1/4 NPT
3	84037397	AR	CONNECTOR, HYD., 8 1/4 NPT
4	84039238	AR	RING,
4	84037357	AR	WASHER, SEALING,
5	84039095	AR	REDUCER, Number 0
5	84039096	AR	REDUCER, Number 1
5	84039099	AR	REDUCER, Number 2
5	84062349	AR	REDUCER, Number 3
5	84039097	AR	REDUCER, Number 4
5	84039101	AR	REDUCER, Number 8
5	84074951	AR	REDUCER, Number 8,5
5	84039100	AR	REDUCER, Number 9
5	84078356	AR	REDUCER, Number 10
6	84039133	AR	FERRULE, D=6MM
7	84039132	AR	NUT, D=6MM
8	84037358	AR	PLUG,
9	84039171	AR	NUT, D=8MM
9	84039172	AR	NUT, D=10MM
10	84039173	AR	FERRULE, D=8MM
10	84039174	AR	FERRULE, D=10MM
11	84039104	AR	SWITCH, PRESSURE, 100 Bar
12	84037398	AR	CONNECTOR, HYD.,
13	84038919	AR	PLATE,
14	84320317	AR	SUPPORT,
15	84320318	AR	SUPPORT,

www.KOBMO.BY

09.03(01) AUTOMATIC LUBRICATION, BASIC

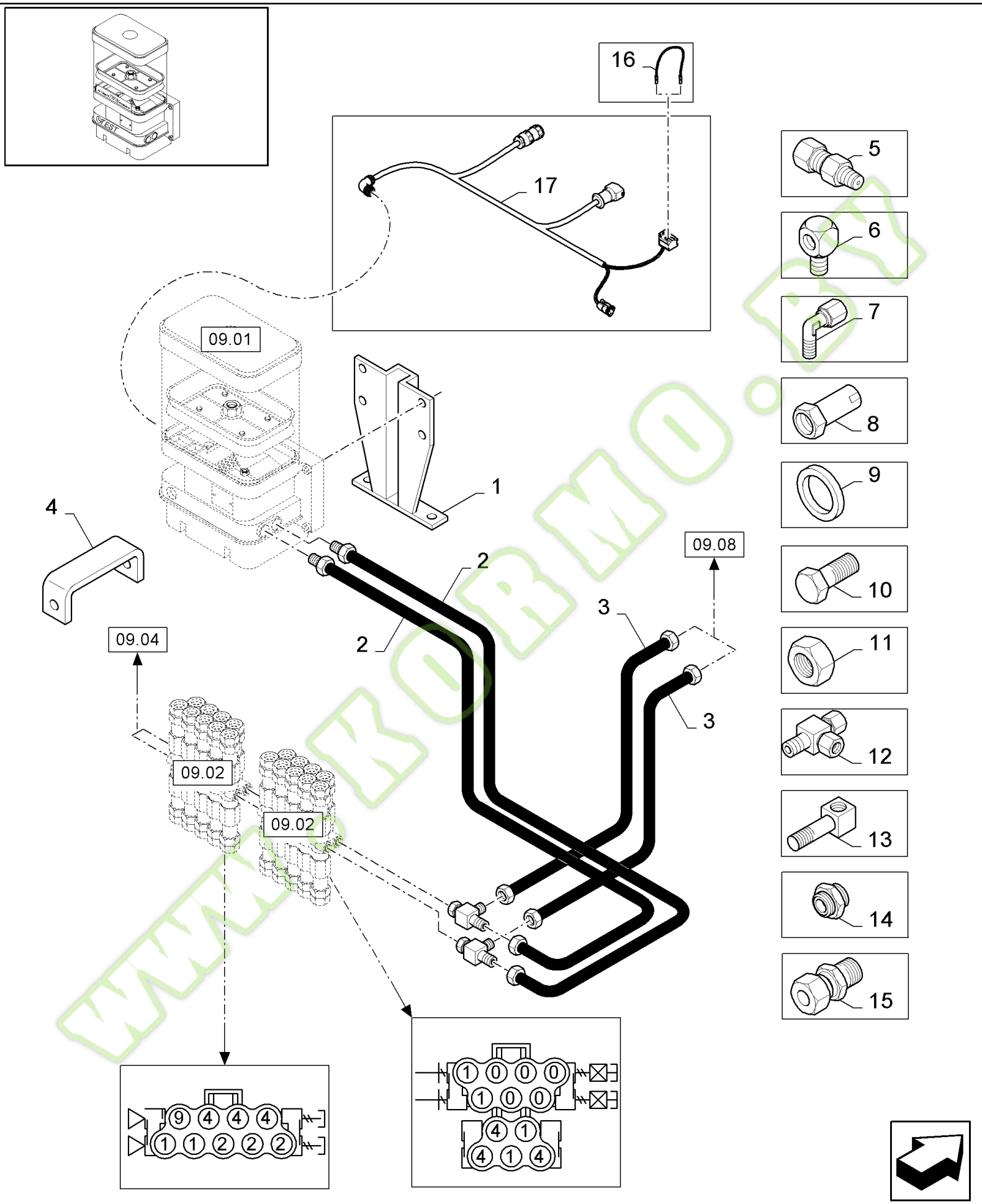

FX50 SELF-PROPELLED FORAGE HARVESTER (10/02-)

09.03(01) AUTOMATIC LUBRICATION, BASIC

Ref	Part Number	Qty	Description
1	84037348	1	BRACKET,
2	84817761	2	HOSE, FLEXIBLE, L=1550
3	84817749	2	HOSE, FLEXIBLE, L=2500
4	84807337	1	SUPPORT,
5	84037349	AR	CONNECTOR, HYD., 1/8"-6MM
5	84037361	AR	CONNECTOR, HYD., D=6MM-M6x1
5	84037362	AR	CONNECTOR, HYD., D=6MM-M8x1
5	84037365	2	CONNECTOR, HYD., D=10MM-1/4"
5	84037366	2	CONNECTOR, HYD., 1/4"
5	84042355	2	CONNECTOR, HYD., 1/8"
6	84037355	6	ELBOW, M6x1-M8x1
7	84037363	2	ELBOW, D=6MM-M6x1
8	84037373	2	COUPLING, QUICK, MALE, Female
9	9824326	AR	WASHER, {PP:89824326} M5, 5MM
9	378243	8	WASHER, {PP:80378243} 8MM
9	140078	2	WASHER, {PP:80140078} 10MM
9	86511324	4	WASHER, M12 x 24 x 2.5, 14MM
9	322356	2	WASHER, LOCK, {PP:80322356} 5MM
9	140045	2	WASHER, LOCK, {PP:80140045} Belleville, M10, 10MM
10	43139	2	SCREW, {PP:80043139} Hex, M10 x 25, 8.8, Full Thd, M10x25
10	120107	4	SCREW, {PP:80120107} Hex, M8 x 50, 8.8, Full Thd, Hex, M8 x 50, 8.8, Full Thd
10	84037379	2	SCREW, M5x40
10	43140	2	BOLT, {PP:80043140} Hex, M10 x 30, 8.8, M10x30
10	331619	AR	SCREW, {PP:80331619} M5x10
10	43138	AR	SCREW, {PP:80043138} Hex, M10 x 20, 8.8, Full Thd, M10x20
11	86629542	4	NUT, M8 x 1.25", Cl 8, M8
11	100016	2	NUT, {PP:80100016} M10, Cl 8, M10
11	86508813	2	NUT, M4, Cl 8, M5
12	84037364	2	CONNECTOR, HYD., D=8MM,1/4" NPT
12	84062125	AR	CONNECTION, 3 WAY, D=8MM, 1/4"
13	84320273	1	CONNECTOR, HYD.,
14	84790421	9	CONNECTOR, HYD.,
15	84790422	9	CONNECTOR, HYD.,
16	84042352	1	HARNESS, WIRE,
17	84443954	1	HARNESS, WIRE,

WWW.KUBMO.BY

09.04(01) AUTOMATIC LUBRICATION, TWO WHEEL DRIVE

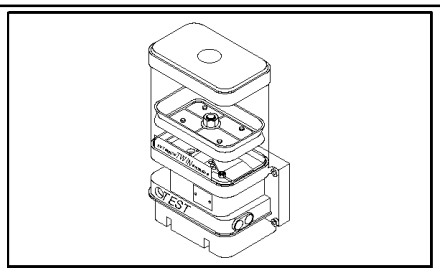

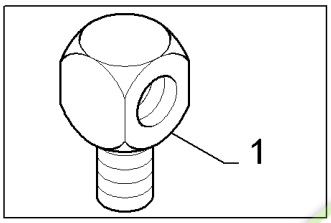

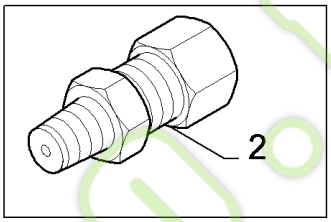

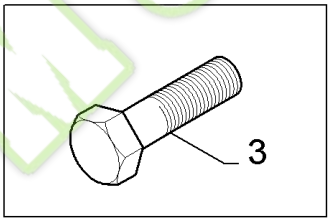

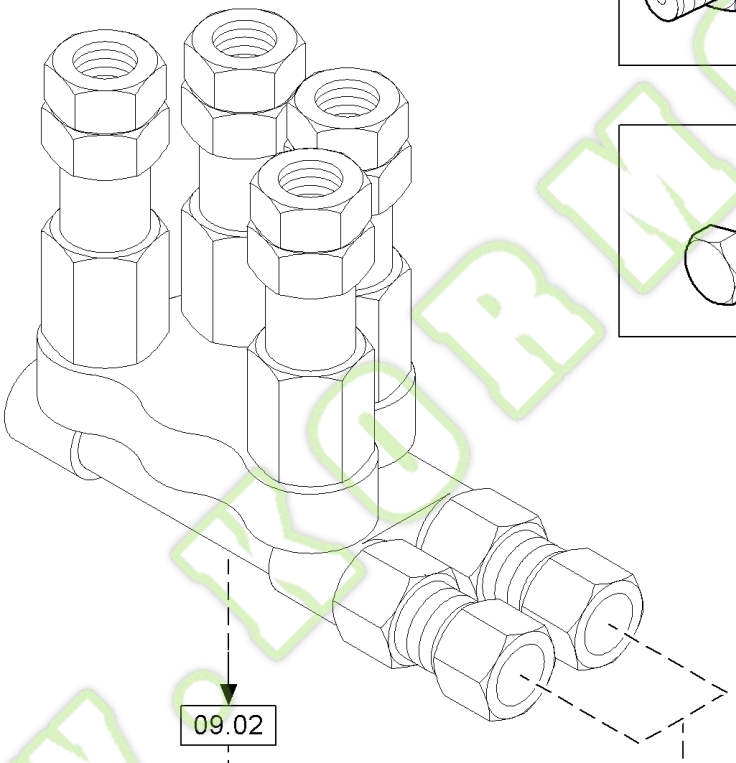

09.02

09.03

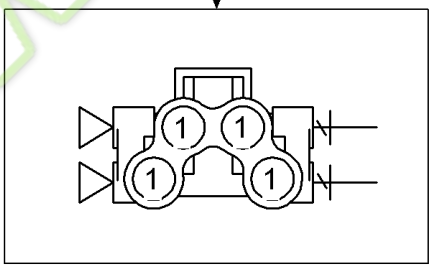

www.KOBMO.BY

FX50 SELF-PROPELLED FORAGE HARVESTER (10/02-)

09.04(01) AUTOMATIC LUBRICATION, TWO WHEEL DRIVE

Ref	Part Number	Qty	Description
1	84037355	4	ELBOW, M6x1,M8x1
1	84037392	4	ELBOW, M8x1 CON-M8x1
2	84037361	1	CONNECTOR, HYD., 6MM-M6x1"
2	84037362	4	CONNECTOR, HYD., 6MM-M8x1"
2	84037365	2	CONNECTOR, HYD., 10MM-1/4"
2	84037366	2	CONNECTOR, HYD., 1/4"
3	331619	AR	SCREW, {PP:80331619} M5x10

www.KOBMO.BY

09.05(01) AUTOMATIC LUBRICATION: TUBES

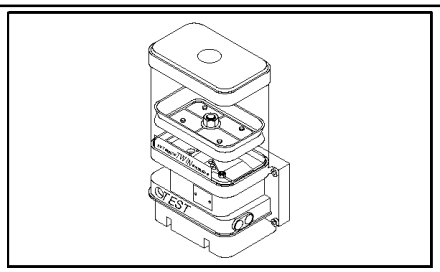

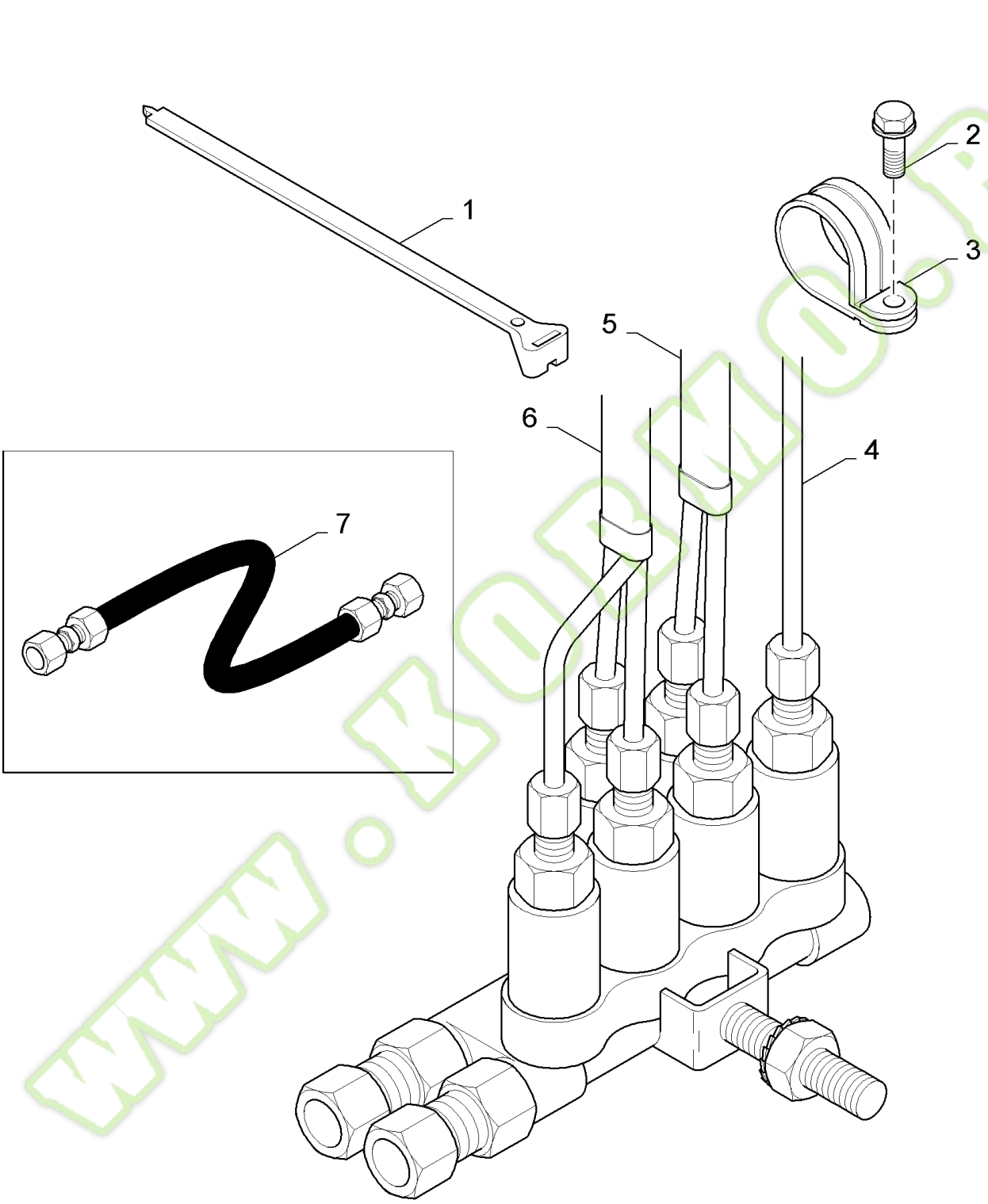

www.KOBMOBY

FX50 SELF-PROPELLED FORAGE HARVESTER (10/02-)

09.05(01) AUTOMATIC LUBRICATION: TUBES

Ref	Part Number	Qty	Description
1	396718	AR	STRAP, {PP:80396718} Black (L=338MM)
1	9818147	AR	CLAMP, {PP:89818147} Black (L=186MM)
2	331619	AR	SCREW, {PP:80331619} M5x10
3	675162	AR	CLAMP, WIRE, {PP:80675162} 6MM
3	84038916	AR	CLAMP, 8MM
3	9507809	AR	CLAMP, {PP:89507809} 10MM
3	431352	AR	CLAMP, {PP:80431352} 12MM
3	84320321	AR	CLAMP, 14MM
3	334697	AR	CLAMP, {PP:80334697} 20MM
3	84038383	AR	CLAMP, 16MM
3	84038384	AR	CLAMP, 18MM
3	356331	AR	CLAMP, {PP:80356331} 18x15MM
4	84039176	AR	TUBE, RIGID, L=3M
5	84039177	AR	TUBE, RIGID, L=3M
6	84039178	AR	TUBE, RIGID, L=3M
7	84807174	AR	KIT, REPAIR, L=500MM, DIA.=6MM

www.KOBMO.BY

09.06(01) AUTOMATIC AND CENTRAL LUBRICATION SYSTEM, CHOPPERBODY

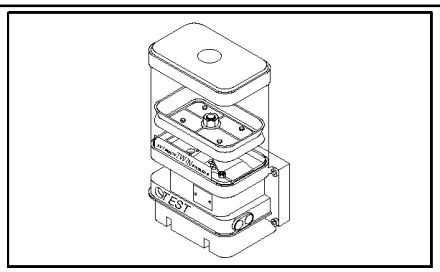

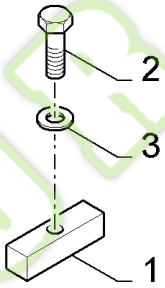

www.KOBMO.BY

09.06(01) AUTOMATIC AND CENTRAL LUBRICATION SYSTEM, CHOPPERBODY

Ref	Part Number	Qty	Description
1	84056184	1	MANIFOLD,
2	120110	5	SCREW, {PP:80120110} Hex, M10 x 25, 8.8, Full Thd, M10x25
3	140045	AR	WASHER, LOCK, {PP:80140045} Belleville, M10, 10MM

WWW.KOBMO.BY

09.07(01) CENTRAL LUBRICATION, CHOPPERBODY

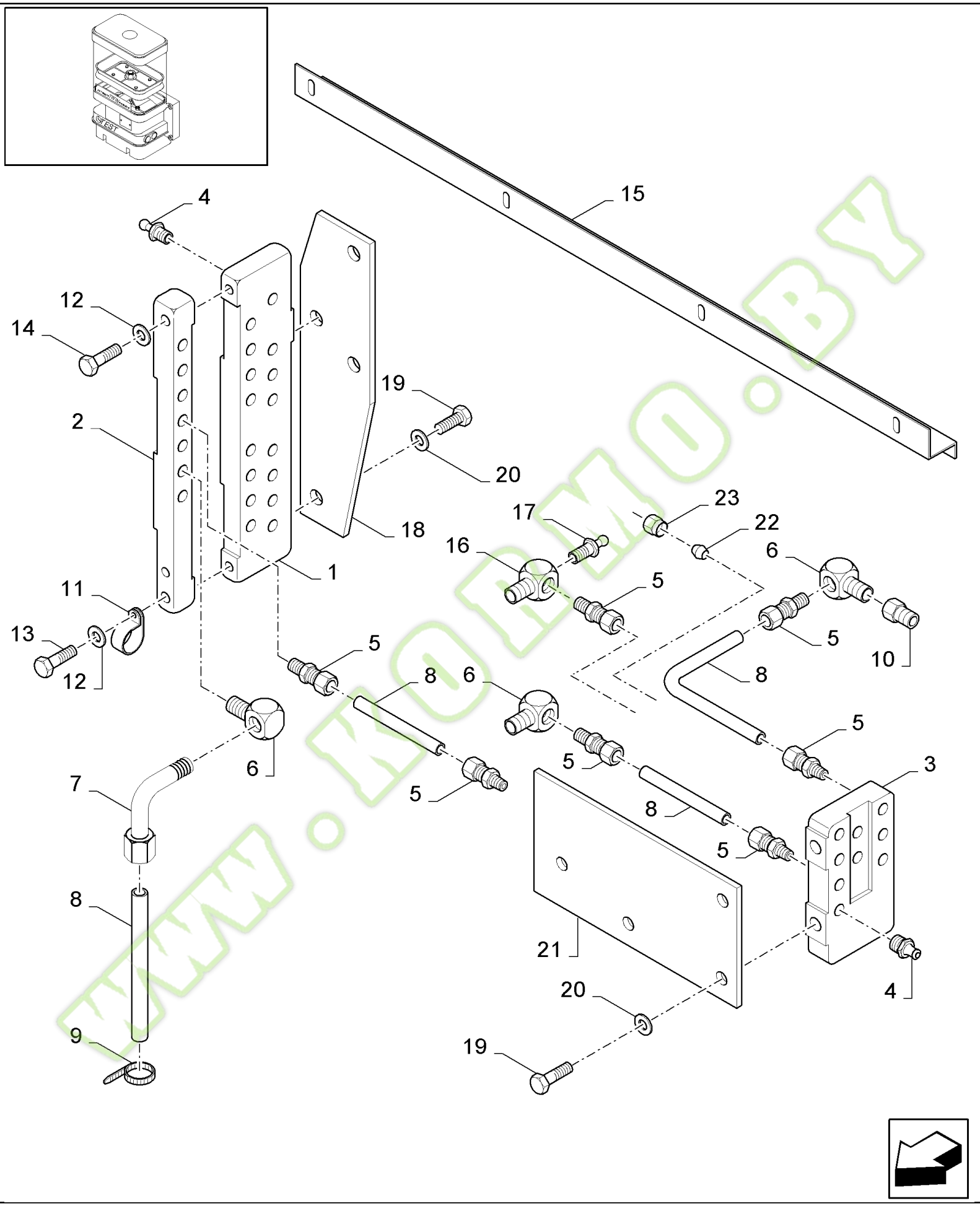

www.kombo.by

FX50 SELF-PROPELLED FORAGE HARVESTER (10/02-)

09.07(01) CENTRAL LUBRICATION, CHOPPERBODY

Ref	Part Number	Qty	Description
1	84053753	1	MANIFOLD, Chopperbody
2	84053530	1	MANIFOLD, Crop processor
3	84053764	1	MANIFOLD, Feeder module
4	9838669	AR	NIPPLE, LUBE, {PP:89838669} G1/8
5	84037349	AR	CONNECTOR, HYD., G1/8,6MM
6	84053211	AR	CONNECTOR, HYD., R1/8,G1/8
7	84037391	AR	ELBOW, R1/8,6MM
8	84078092	AR	TUBE, L=5M,6MM
9	323597	AR	STRAP, {PP:80323597}
10	84058728	1	ADAPTER, G1/8,R1/8
11	9827902	AR	CLAMP, {PP:89827902}
12	322358	AR	WASHER, LOCK, {PP:80322358} Belleville, M8, 8MM
13	80120104	AR	SCREW, M8x20
14	300381	2	SCREW, {PP:80300381} Hex, M8 x 35, 8.8, M8x35
15	84443798	1	COVER,
16	84062396	AR	CONNECTION, 3 WAY,
17	9838669	AR	NIPPLE, LUBE, {PP:89838669}
18	84442528	1	PLATE,
19	80300383	AR	SCREW, M10x16
20	140045	AR	WASHER, LOCK, {PP:80140045} Belleville, M10, 10MM
21	84442535	1	PLATE,
22	84039133	AR	FERRULE, 6MM
23	84039132	AR	NUT, M6

www.KOBMO.BY

09.08(01) AUTOMATIC LUBRICATION, CHOPPERBODY

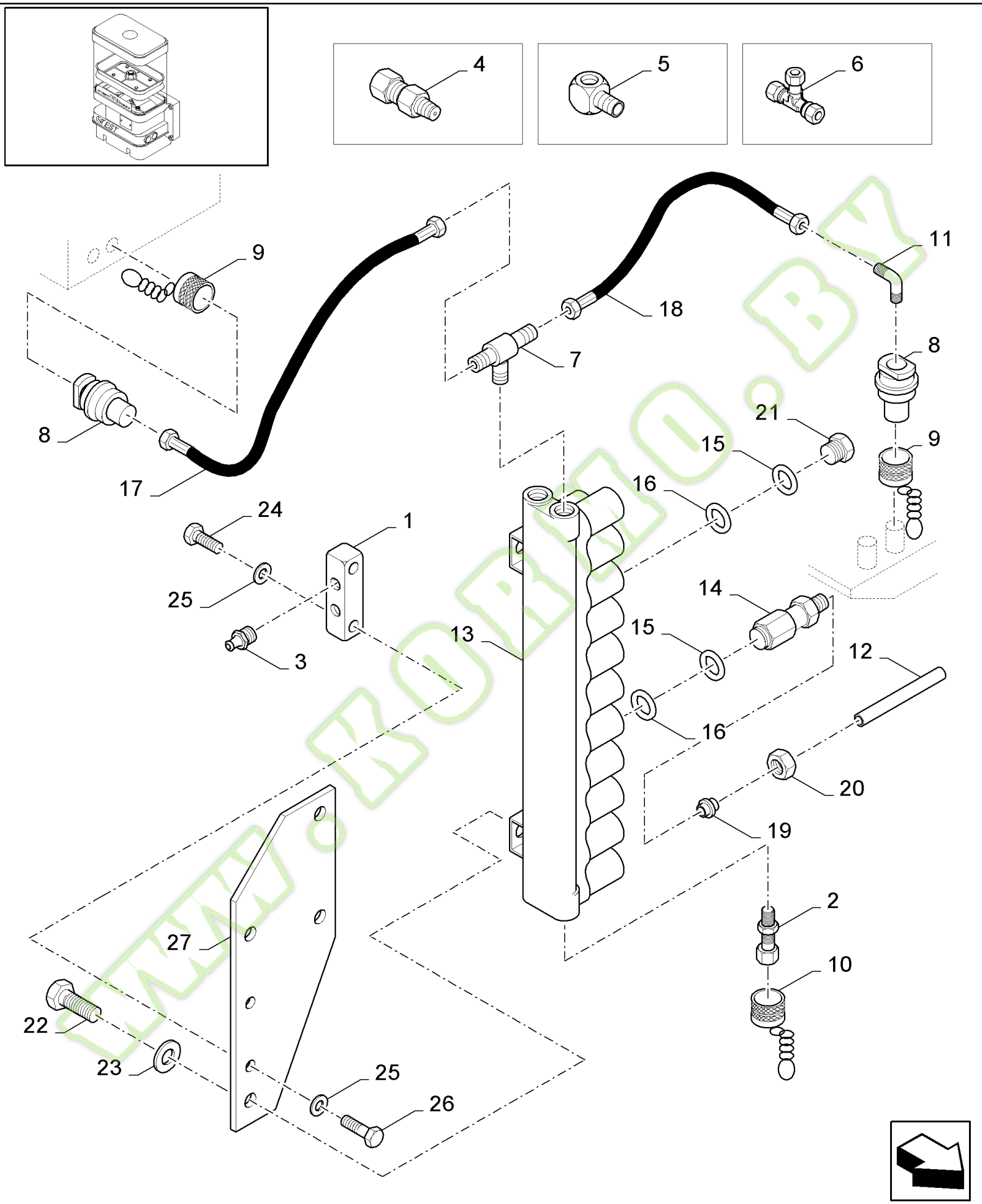

FX50 SELF-PROPELLED FORAGE HARVESTER (10/02-)

09.08(01) AUTOMATIC LUBRICATION, CHOPPERBODY

Ref	Part Number	Qty	Description
1	84053766	1	MANIFOLD,
2	84817693	2	CONNECTOR, HYD.,
3	9838669	2	NIPPLE, LUBE, {PP:89838669} 1/8"
4	84037349	16	CONNECTOR, HYD., 1/8"- 6MM
5	84053211	10	CONNECTOR, HYD., 1/8"- 1/8"
6	84056782	2	CONNECTION, 3 WAY,
7	84817694	2	CONNECTOR, HYD.,
8	84037399	2	COUPLING, QUICK, MALE,
9	84037400	4	PROTECTION CAP,
10	84062116	2	DUST CAP,
11	84068113	2	CONNECTOR, HYD.,
12	84078092	AR	TUBE, L=5M, D=6MM
13	84068112	1	MANIFOLD,
14	84039096	10	REDUCER, NUMBER 1
14	84078356	2	REDUCER, NUMBER 10
14	84039101	1	REDUCER, NUMBER 8
14	84039097	2	REDUCER, NUMBER 4
15	84062150	21	O-RING, 18,75MM
16	84062149	21	O-RING, 6,75MM
17	84442911	2	HOSE, FLEXIBLE,
18	84442912	2	HOSE, FLEXIBLE,
19	84039133	AR	FERRULE,
20	84039132	AR	NUT, M6
21	84039103	6	PLUG,
22	80300383	AR	SCREW, M10x16
23	140045	AR	WASHER, LOCK, {PP:80140045} Belleville, M10, 10MM
24	300381	2	SCREW, {PP:80300381} Hex, M8 x 35, 8.8, M8x35
25	322358	AR	WASHER, LOCK, {PP:80322358} Belleville, M8, 8MM
26	89706690	AR	NUT, CL 8, M8 x 1.25 x 13.0
27	84442216	1	PLATE,

www.KOBMO.BY

09.09(01) AUTOMATIC LUBRICATION, FEEDROLLS

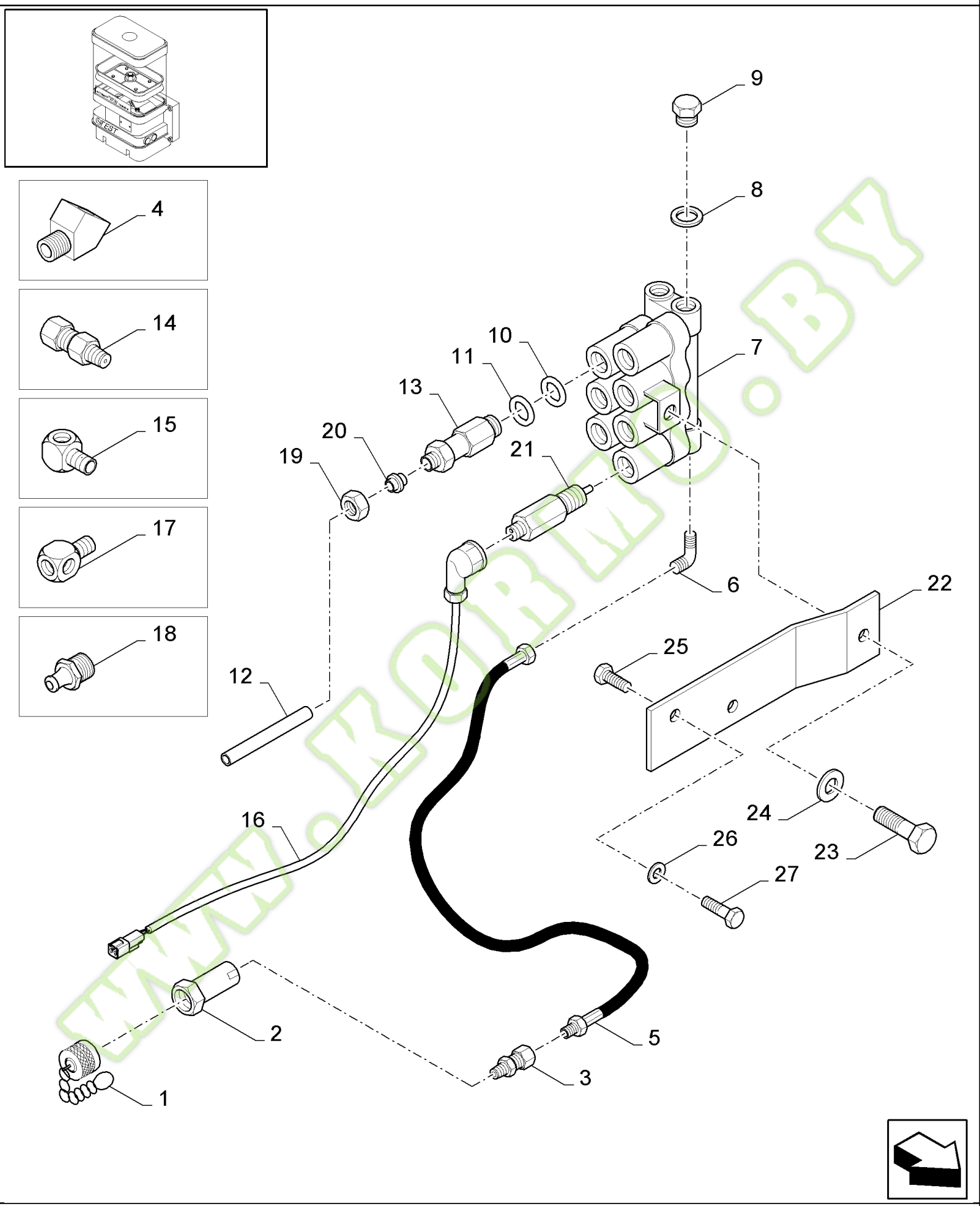

FX50 SELF-PROPELLED FORAGE HARVESTER (10/02-)

09.09(01) AUTOMATIC LUBRICATION, FEEDROLLS

Ref	Part Number	Qty	Description
1	84037374	2	DUST CAP,
2	84037373	2	COUPLING, QUICK, MALE,
3	84817686	2	CONNECTOR, HYD., 1/4"
4	84078411	1	CONNECTOR, HYD.,
5	84817078	2	HOSE,
6	84068113	2	CONNECTOR, HYD.,
7	84068114	1	MANIFOLD, 7 PORT
8	84037357	2	WASHER, SEALING,
9	84037358	2	PLUG,
10	84062150	7	O-RING,
11	84062149	7	O-RING,
12	84078092	AR	TUBE, L=5M, D=6MM
13	84039101	1	REDUCER, NUMBER 8
13	84039099	1	REDUCER, NUMBER 2
14	84037349	5	CONNECTOR, HYD., 1/8"- 6MM
15	84053211	1	CONNECTOR, HYD., 1/8"- 1/8"
16	84817087	1	HARNESS, WIRE,
17	84062396	3	CONNECTION, 3 WAY,
18	9838669	3	NIPPLE, LUBE, {PP:89838669} G1/8
19	84039132	AR	NUT, M6
20	84039133	AR	FERRULE, 6MM
21	84039104	1	SWITCH, PRESSURE, 100BAR
22	84442211	1	PLATE,
23	80300383	AR	SCREW, M10x16
24	140045	AR	WASHER, LOCK, {PP:80140045} Belleville, M10, 10MM
25	80120104	2	SCREW, M8x20
26	322358	AR	WASHER, LOCK, {PP:80322358} Belleville, M8, 8MM
27	89706690	AR	NUT, CL 8, M8 x 1.25 x 13.0

www.KOBMO.BY

09.10(01) AUTOMATIC LUBRICATION, CROP PROCESSOR

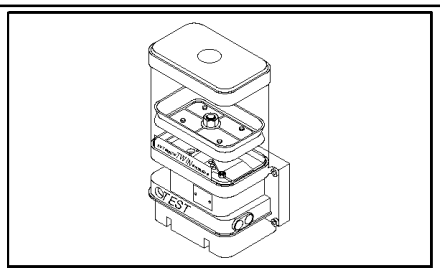

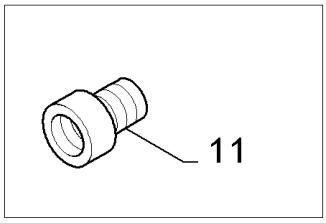

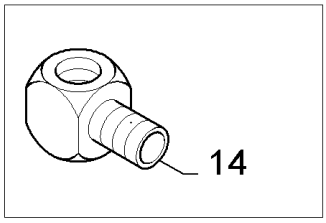

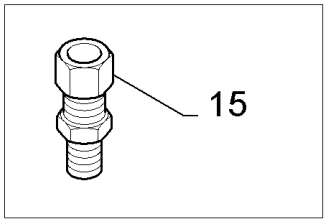

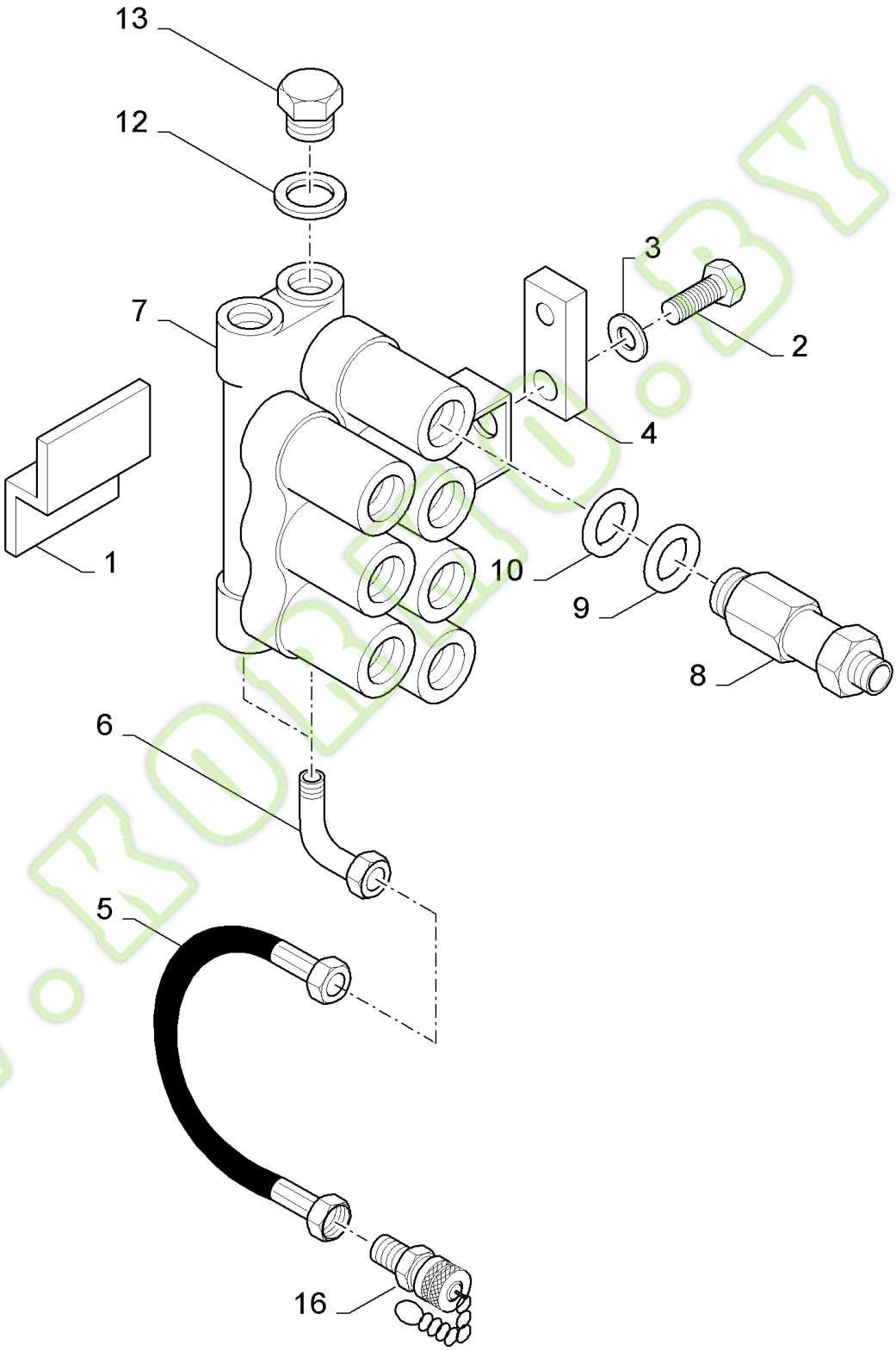

www.KOBETO.BY

FX50 SELF-PROPELLED FORAGE HARVESTER (10/02-)

09.10(01) AUTOMATIC LUBRICATION, CROP PROCESSOR

Ref	Part Number	Qty	Description
1	84443798	1	COVER,
2	43139	AR	SCREW, {PP:80043139} Hex, M10 x 25, 8.8, Full Thd, M10x25
3	140045	AR	WASHER, LOCK, {PP:80140045} Belleville, M10, 10MM
4	84037414	1	BRACKET,
5	84817395	2	HOSE, FLEXIBLE, , BSN C277
5	84819418	2	HOSE, FLEXIBLE, , ASN D278
6	84068113	2	CONNECTOR, HYD., 1/4", D=8MM
7	84068114	1	MANIFOLD, 7 PORT
8	84039096	3	REDUCER, NUMBER 1
8	84074951	4	REDUCER, NUMBER 8.5
9	84062150	AR	O-RING, 18.77x1.78MM
10	84062149	AR	O-RING, 6.75x1.78MM
11	84058728	2	ADAPTER, G1/8, R1/8
12	84037357	AR	WASHER, SEALING,
13	84037358	AR	PLUG, 1/4"
14	84053211	AR	CONNECTOR, HYD., G1/8", G1/8"
15	84037349	AR	CONNECTOR, HYD., G1/8", G1/8"
16	84062117	2	DUST CAP,

www.KOBMO.BY

09.11(01) AUTOMATIC LUBRICATION, CROP PRO PLUS TM

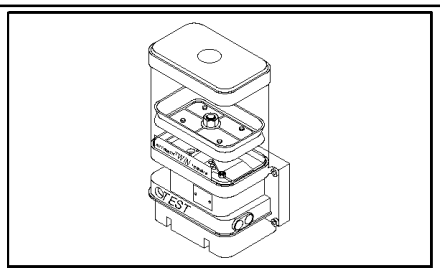

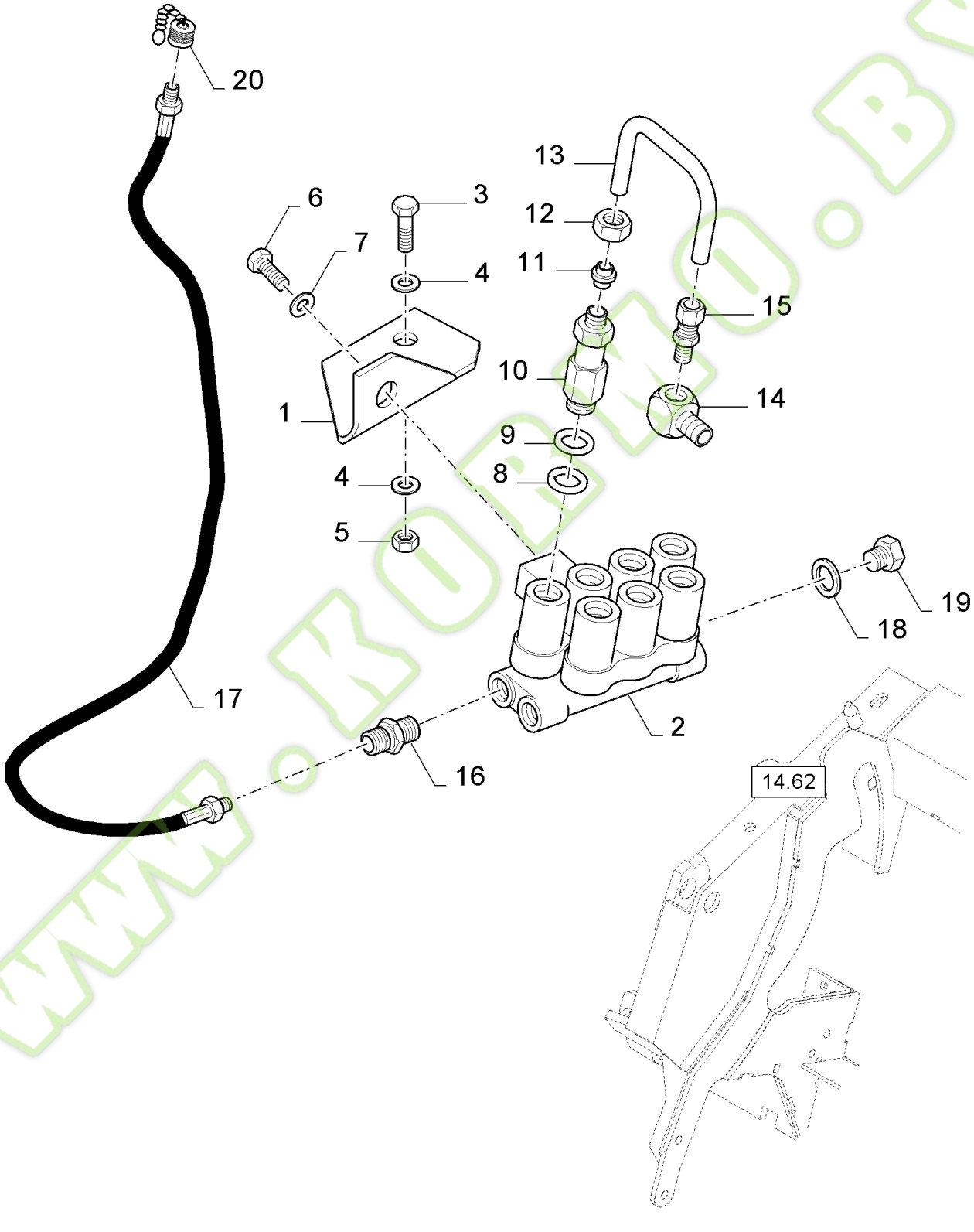

www.KOBMO.BY

FX50 SELF-PROPELLED FORAGE HARVESTER (10/02-)

09.11(01) AUTOMATIC LUBRICATION, CROP PRO PLUS TM

Ref	Part Number	Qty	Description
1	84437962	1	BRACKET,
2	84068114	1	MANIFOLD,
3	80120104	AR	SCREW, M8x20
4	322358	AR	WASHER, LOCK, {PP:80322358} Belleville, M8, 8MM
5	89706690	AR	NUT, CL 8, M8 x 1.25 x 13.0
6	43138	1	SCREW, {PP:80043138} Hex, M10 x 20, 8.8, Full Thd, M10x20
7	140045	1	WASHER, LOCK, {PP:80140045} Belleville, M10, 10MM
8	84062150	AR	O-RING, 18.77x1.78MM
9	84062149	AR	O-RING, 6.75x1.78MM
10	84074951	4	REDUCER, NUMBER 8.5 (8.9)
10	84039096	3	REDUCER, NUMBER 1 (8.9)
11	84039133	AR	FERRULE,
12	84039132	AR	NUT,
13	84078092	AR	TUBE, L=5M, D=6MM
14	84053211	5	CONNECTOR, HYD.,
15	84037349	7	CONNECTOR, HYD.,
16	84062391	2	CONNECTOR, HYD.,
17	84817395	2	HOSE, FLEXIBLE, , BSN C277
17	84819417	2	HOSE, FLEXIBLE, , ASN D278
18	84037357	2	WASHER, SEALING,
19	84037358	2	PLUG,
20	84062117	2	DUST CAP,

www.KOBMO.BY

09.12(01) AUTOMATIC LUBRICATION, 300N6X

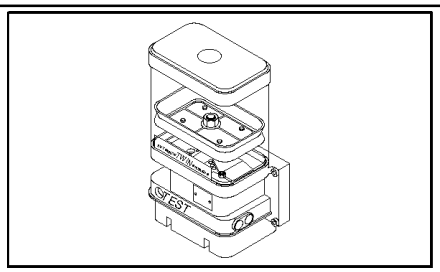

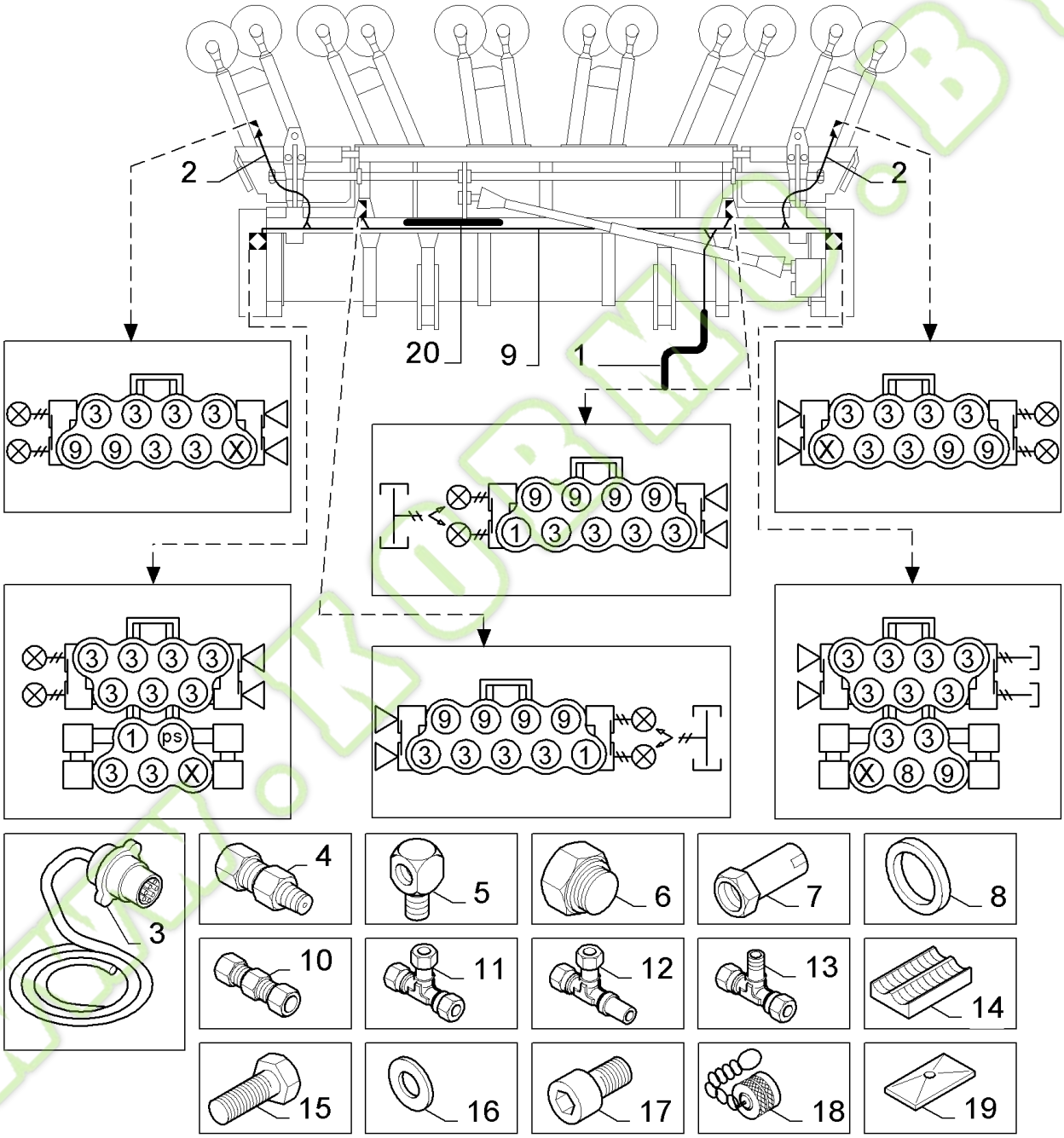

WWW.KOBELOBY

FX50 SELF-PROPELLED FORAGE HARVESTER (10/02-)

09.12(01) AUTOMATIC LUBRICATION, 300N6X

Ref	Part Number	Qty	Description
1	84320329	2	HOSE,
2	84320331	4	HOSE,
3	84042362	1	HARNESS, WIRE, Male
4	84037349	4	CONNECTOR, HYD., 1/8"-6MM
4	84037362	26	CONNECTOR, HYD., Steel,6MM-M8x1
4	84037397	2	CONNECTOR, HYD., 8MM-1/4"
4	84053211	AR	CONNECTOR, HYD., Grass,6MM-M8x1
5	84037355	2	ELBOW, M6x1 CON-M8x1
5	84037392	26	ELBOW, M8x1 CON-M8x1
5	84037398	6	CONNECTOR, HYD., 8MM-1/4"
5	84038922	20	CONNECTOR, HYD., 6MM-M8x1
5	84038923	1	CONNECTOR, HYD., 6MM-M10x1
5	84053211	1	CONNECTOR, HYD., 6 1/8-6 1/8
6	84037358	12	PLUG, 1/4"
7	84037373	2	COUPLING, QUICK, MALE, Female
8	84037357	12	WASHER, SEALING,
9	84038920	AR	TUBE, HYD, 8MMx1MM
9	84038921	AR	TUBE, HYD, 6MMx1MM
10	84038924	2	CONNECTOR, HYD., 8MM-8MM
11	84038925	4	CONNECTION, 3 WAY, 8MM
12	84038926	2	CONNECTION, 3 WAY, 8MM
13	84038927	4	CONNECTION, 3 WAY, 8MM
14	84038928	3	CLAMP, 8MM
14	84320332	3	CLAMP, 12MM
15	43138	2	SCREW, {PP:80043138} Hex, M10 x 20, 8.8, Full Thd, M10x20
15	80120167	2	SCREW, M6x35
15	80300383	AR	SCREW, M10x16
15	331619	8	SCREW, {PP:80331619} M5x1
16	140045	2	WASHER, LOCK, {PP:80140045} Belleville, M10, 10MM
16	140078	2	WASHER, {PP:80140078} 10MM
17	86511830	3	SCREW, Cross Pan Hd, M6 x 20, M6x20
18	84037374	2	DUST CAP,
19	84320333	3	PLATE,
20	84320330	2	HOSE,

www.KOBMO.BY

09.13(01) EXTENSION KIT FOR AUTOMATIC LUBRICATION, 6-ROW AND PICK-UP HEADERS

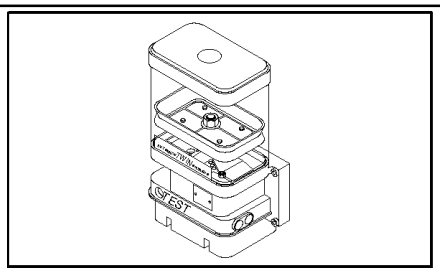

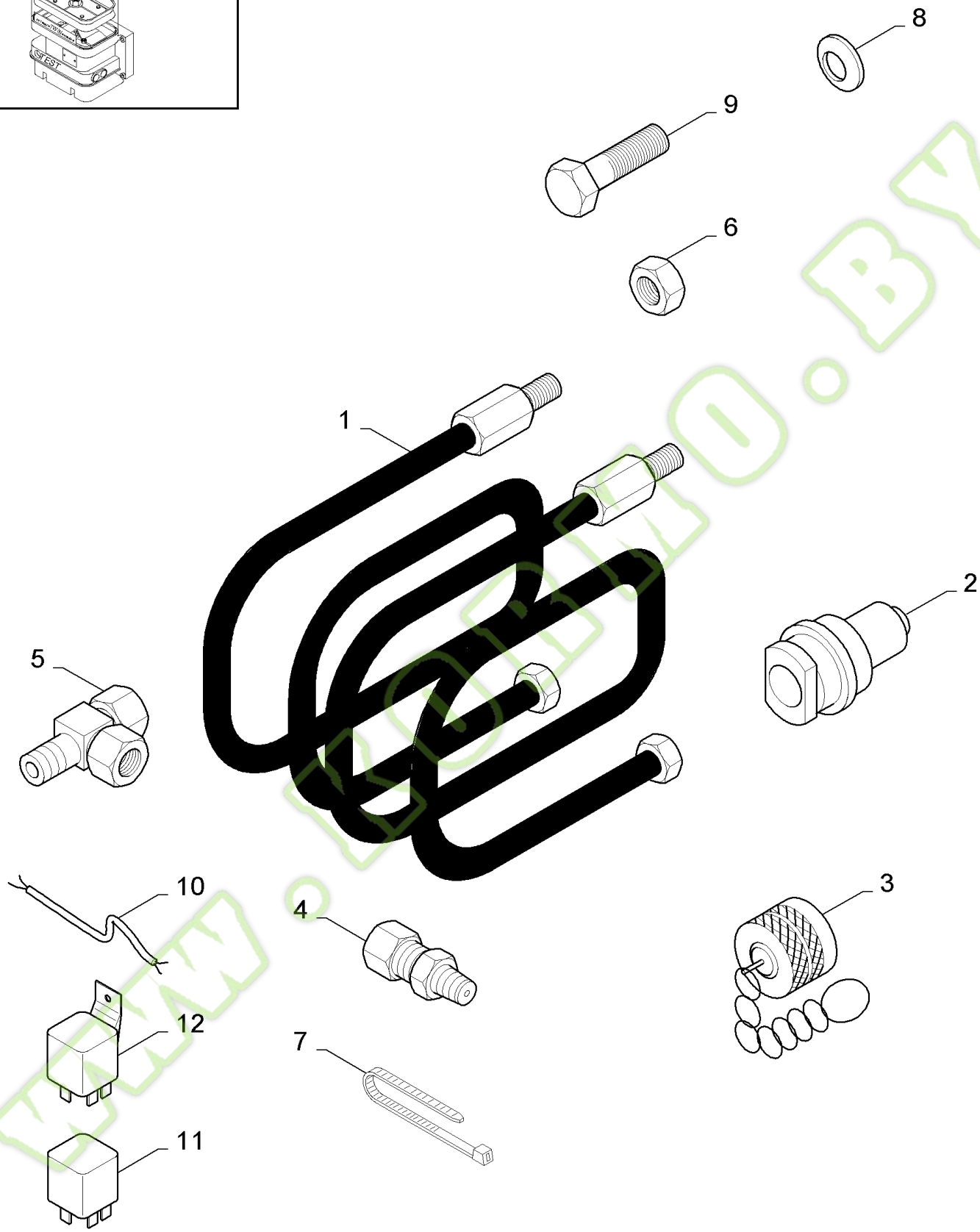

www.kombo.by

FX50 SELF-PROPELLED FORAGE HARVESTER (10/02-)

09.13(01) EXTENSION KIT FOR AUTOMATIC LUBRICATION, 6-ROW AND PICK-UP HEADERS

Ref	Part Number	Qty	Description
1	84320309	2	HOSE,
2	84037399	2	COUPLING, QUICK, MALE, Male
3	84037400	2	PROTECTION CAP,
4	84817686	2	CONNECTOR, HYD.,
5	84038038	2	CONNECTOR, HYD., D=10MM-D=10MM
6	86508813	3	NUT, M4, Cl 8, M5
7	396718	AR	STRAP, {PP:80396718}
8	322356	3	WASHER, LOCK, {PP:80322356} 5MM
9	84037379	3	SCREW, M5x40
10	84042363	1	HARNESS, WIRE,
11	84000651	1	RELAY,
12	80399158	AR	SWITCH, REMOTE CONTROL,

www.KOBMO.BY

09.14(01) AUTOMATIC LUBRICATION, 346W-356W-366W

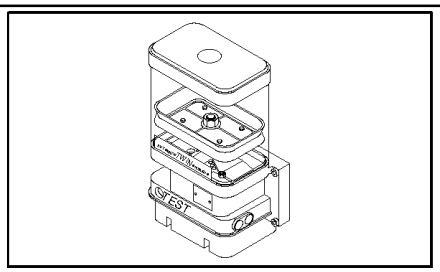

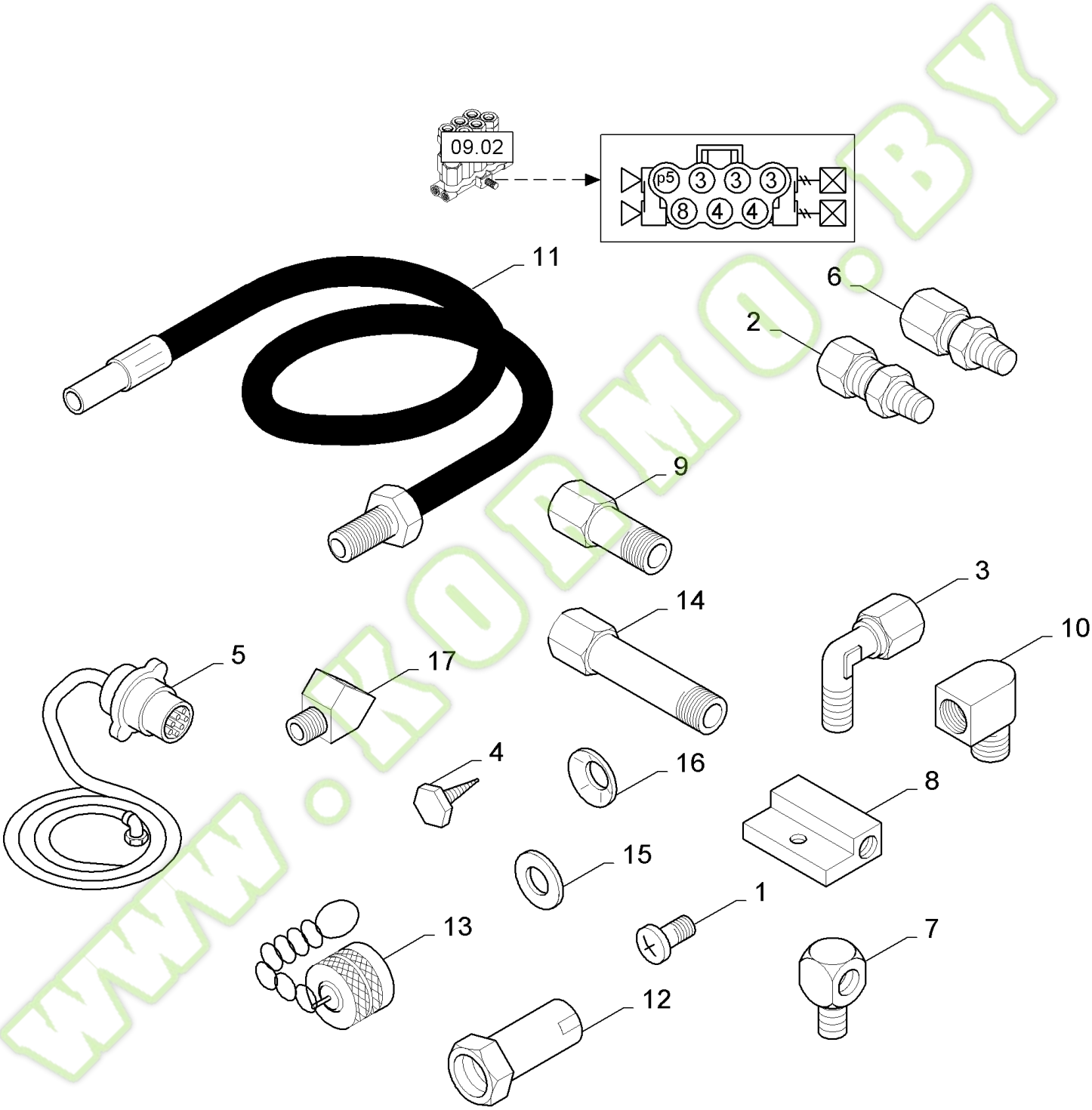

www.KOBMO.BY

FX50 SELF-PROPELLED FORAGE HARVESTER (10/02-)

09.14(01) AUTOMATIC LUBRICATION, 346W-356W-366W

Ref	Part Number	Qty	Description
1	120014	3	SCREW, {PP:80120014} Cross Pan Hd, M6 x 20, M6x20
2	84037349	AR	CONNECTOR, HYD., 1/8"-6MM
3	84037391	3	ELBOW, 1/8"-6MM
4	331619	AR	SCREW, {PP:80331619} M5x10
5	84078403	1	HARNESS, WIRE,
6	84078402	1	CONNECTOR, HYD., D=6MM
7	84053211	AR	CONNECTOR, HYD., 1/8"-1/8"
8	84053209	3	MANIFOLD, 6 1/8
9	84078404	2	CONNECTOR, HYD., 1/8 NPTF-42MM
10	84078405	3	CONNECTOR, HYD., 1/8 NPT-1/8 NPT
11	84078409	2	HOSE,
12	84037373	2	COUPLING, QUICK, MALE,
13	84037374	2	DUST CAP,
14	84078407	1	CONNECTOR, HYD., 1/8 NPTF-70MM
15	140015	3	WASHER, {PP:80140015} 6MM
16	322357	3	WASHER, LOCK, {PP:80322357} Belleville, M6, Belleville, M6
17	84078411	1	CONNECTOR, HYD., , FOR 366W ONLY

www.KOBMO.BY

09.15(01) KIT, DIAGNOSIS AUTOMATIC LUBRICATION SYSTEM

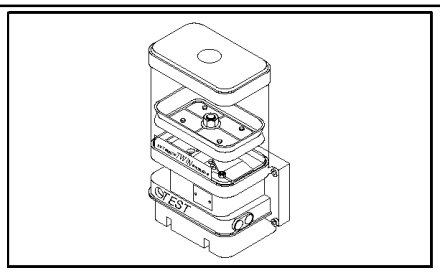

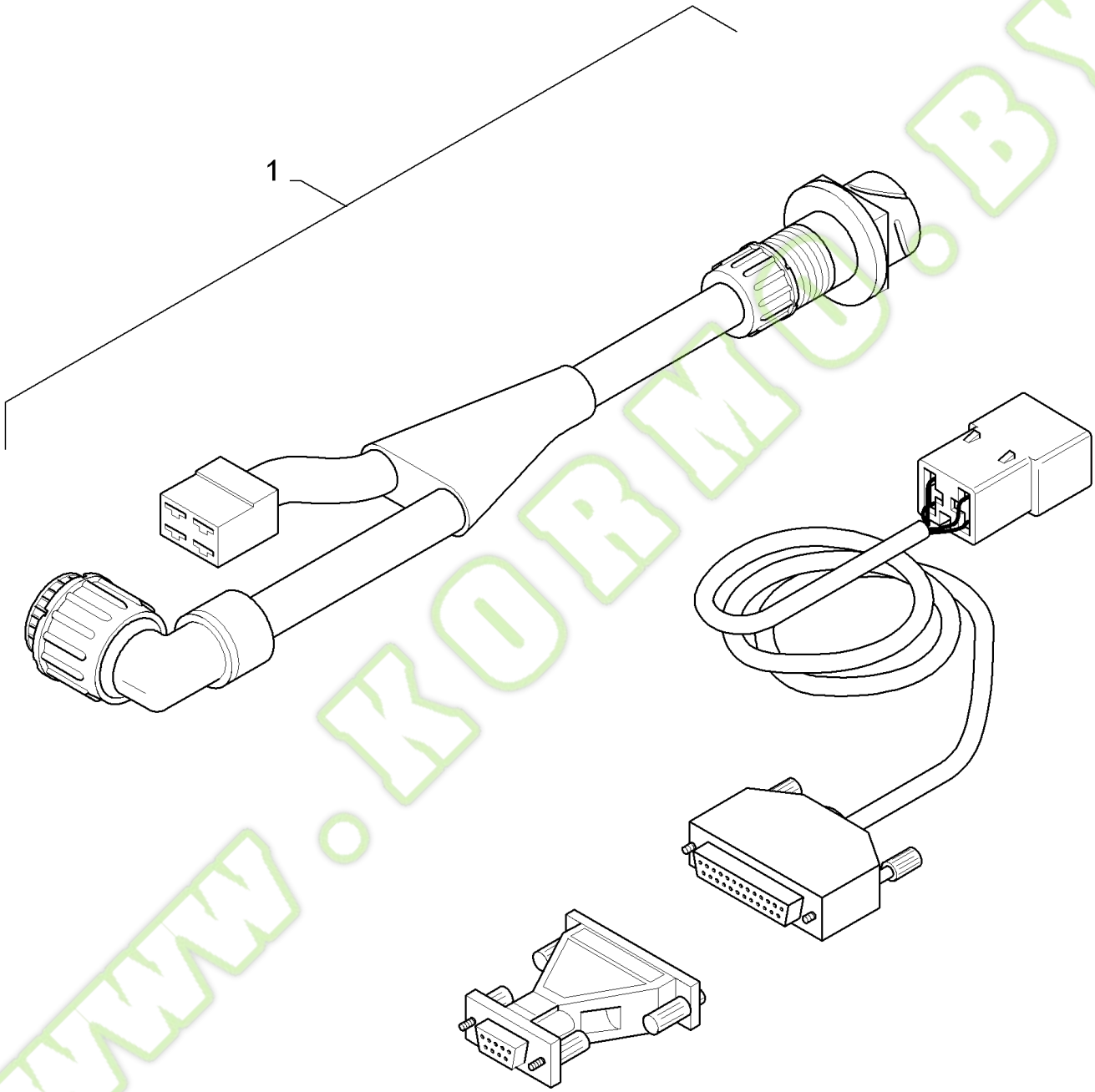

www.KOBMOB.BY

FX50 SELF-PROPELLED FORAGE HARVESTER (10/02-)

09.15(01) KIT, DIAGNOSIS AUTOMATIC LUBRICATION SYSTEM

Ref	Part Number	Qty	Description
1	84100397	1	KIT,

www.KORMO.BY

09.16(01) AUTOMATIC LUBRICATION - INTERFACE

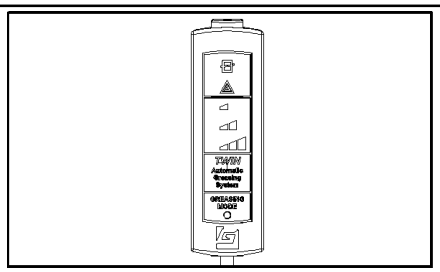

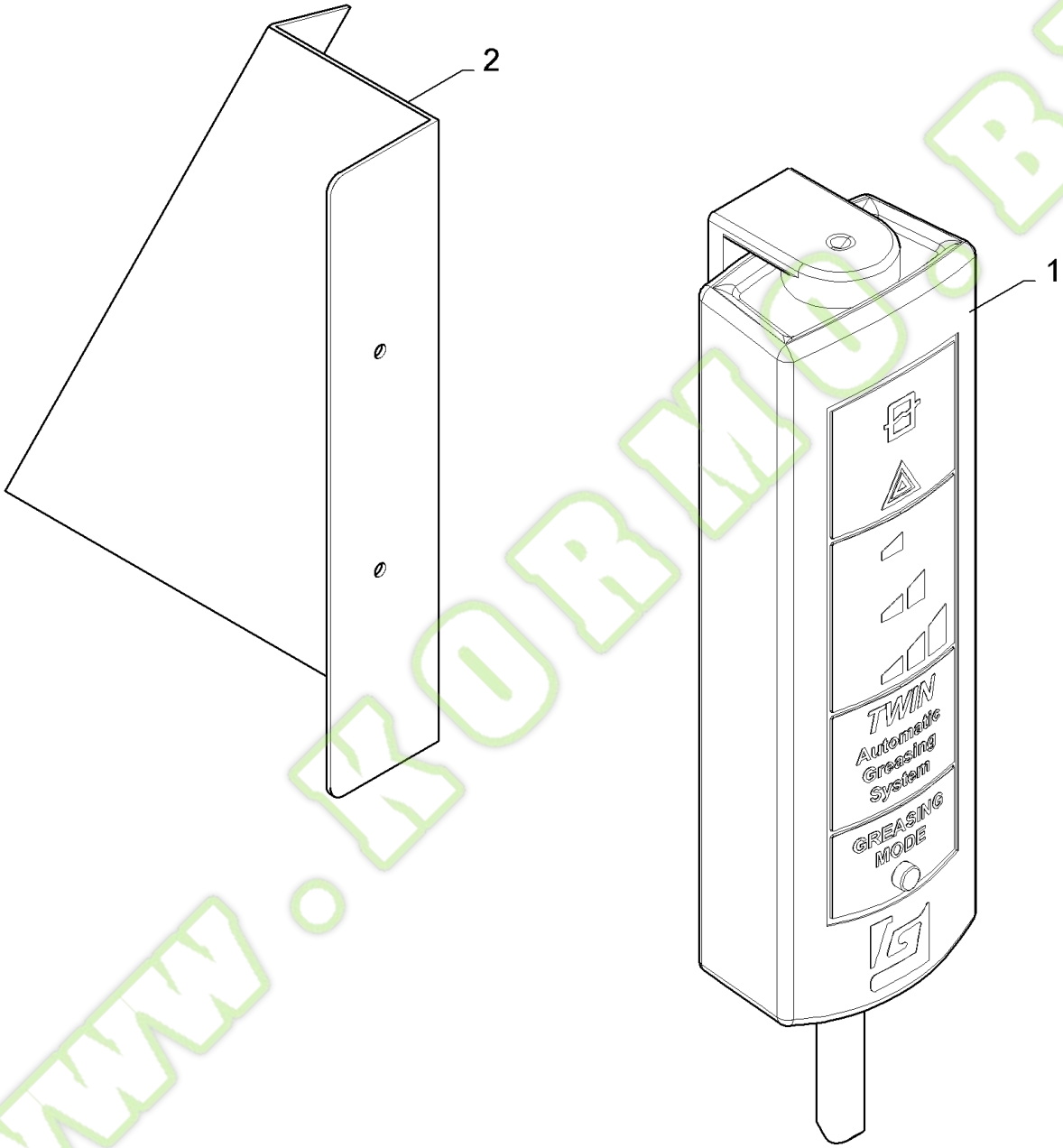

www.ROBMOBY

09.16(01) AUTOMATIC LUBRICATION - INTERFACE

Ref	Part Number	Qty	Description
1	84443955	1	MONITOR, CONTROL,
2	84443724	1	SUPPORT,

www.KORMO.BY

CAB	CABINE	CABINA	CAB
CABINA	KABINE	CABINA	CABINE

SEC. 10

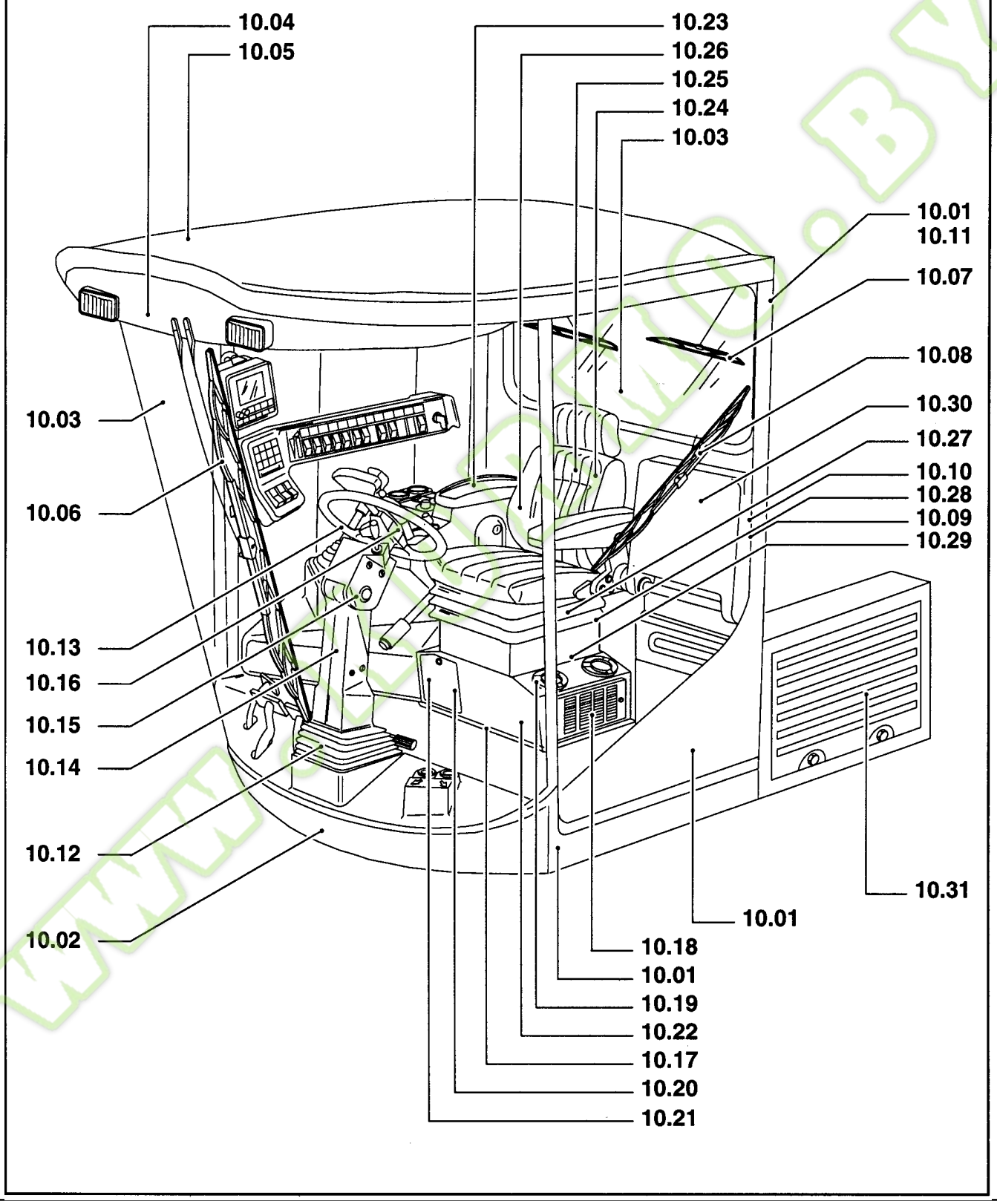

10.000(01) SECTION LIST 10

Ref	Part Number	Qty	Description

WWW.KORMO.BY

10.01(01) CAB

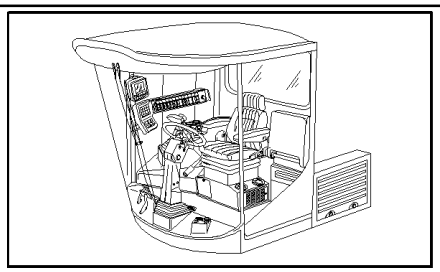

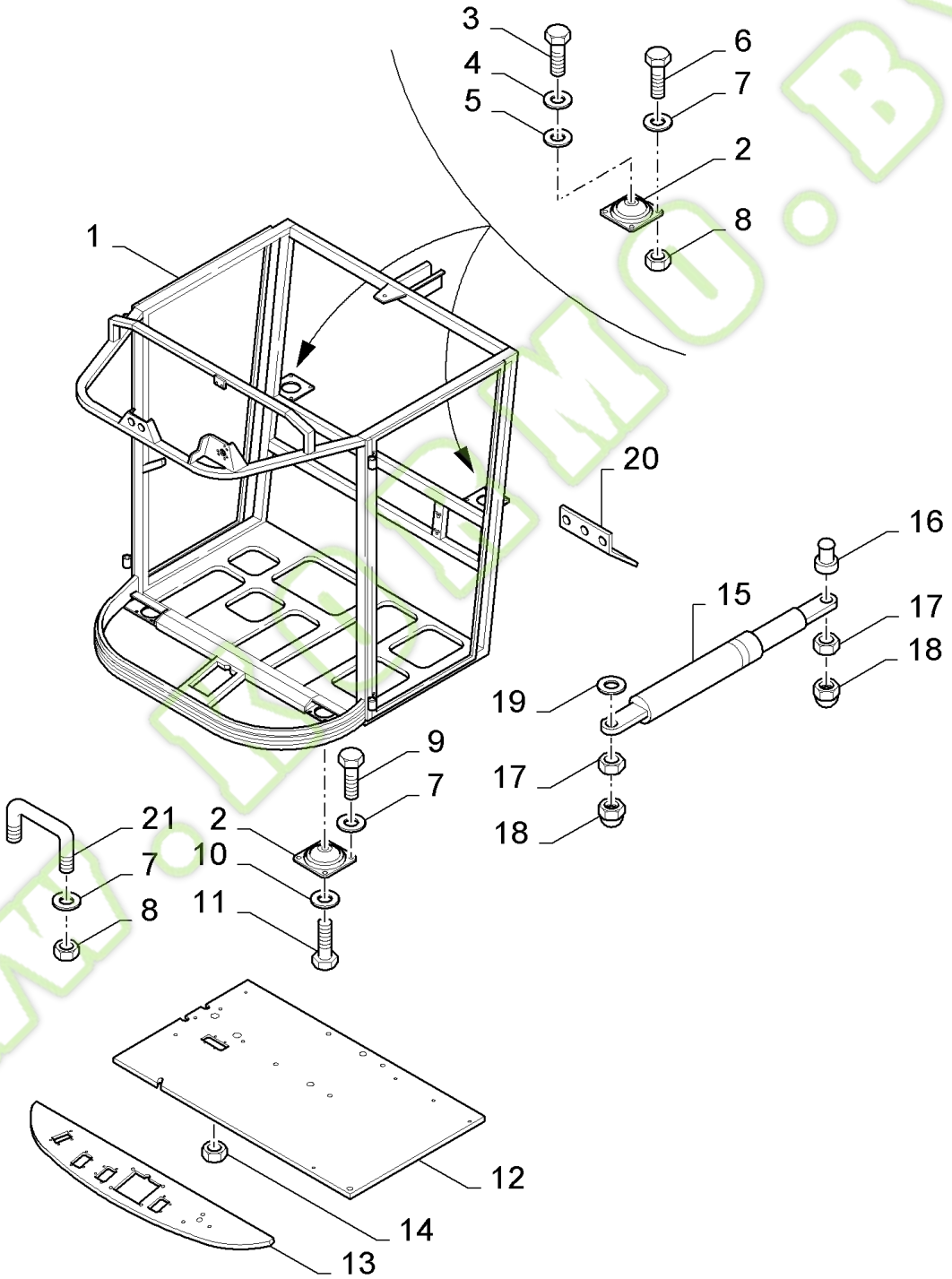

www.kubmo.by

FX50 SELF-PROPELLED FORAGE HARVESTER (10/02-)

10.01(01) CAB

Ref	Part Number	Qty	Description
1	84001211	1	CAB,
2	84053736	4	DAMPER,
4	140045	2	WASHER, LOCK, {PP:80140045} Belleville, M10, 10MM
5	446694	2	WASHER, {PP:80446694}
6	80120104	8	SCREW, M8x20
7	322358	AR	WASHER, LOCK, {PP:80322358} Belleville, M8, 8MM
8	89706690	AR	NUT, CL 8, M8 x 1.25 x 13.0
10	140046	2	WASHER, LOCK, {PP:80140046} Belleville, M12, 12MM
11	9706687	2	SCREW, {PP:89706687} Hex, M12 x 30, 8.8, M12x30
12	84002531	1	FLOOR,
13	84001618	1	MAT,
14	353068	4	NUT, {PP:80353068} M6
15	84021178	1	GAS STRUT,
16	9812123	1	BUSHING, {PP:89812123}
17	86629542	2	NUT, M8 x 1.25", Cl 8, M8
18	458639	2	PLUG, {PP:80458639}
19	350240	1	WASHER, {PP:80350240}
20	84002257	1	PLATE, COVER,
21	84014562	1	SUPPORT,
3	43144	2	SCREW, {PP:80043144} Hex, M10 x 70, 8.8, M10x70
9	16043224	8	SCREW, Hex, M8 x 16, 8.8, Full Thd, M8x16

www.KOBMO.BY

10.02(01) CAB FLOOR

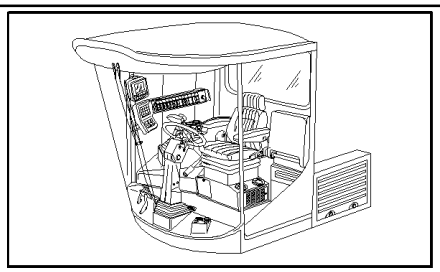

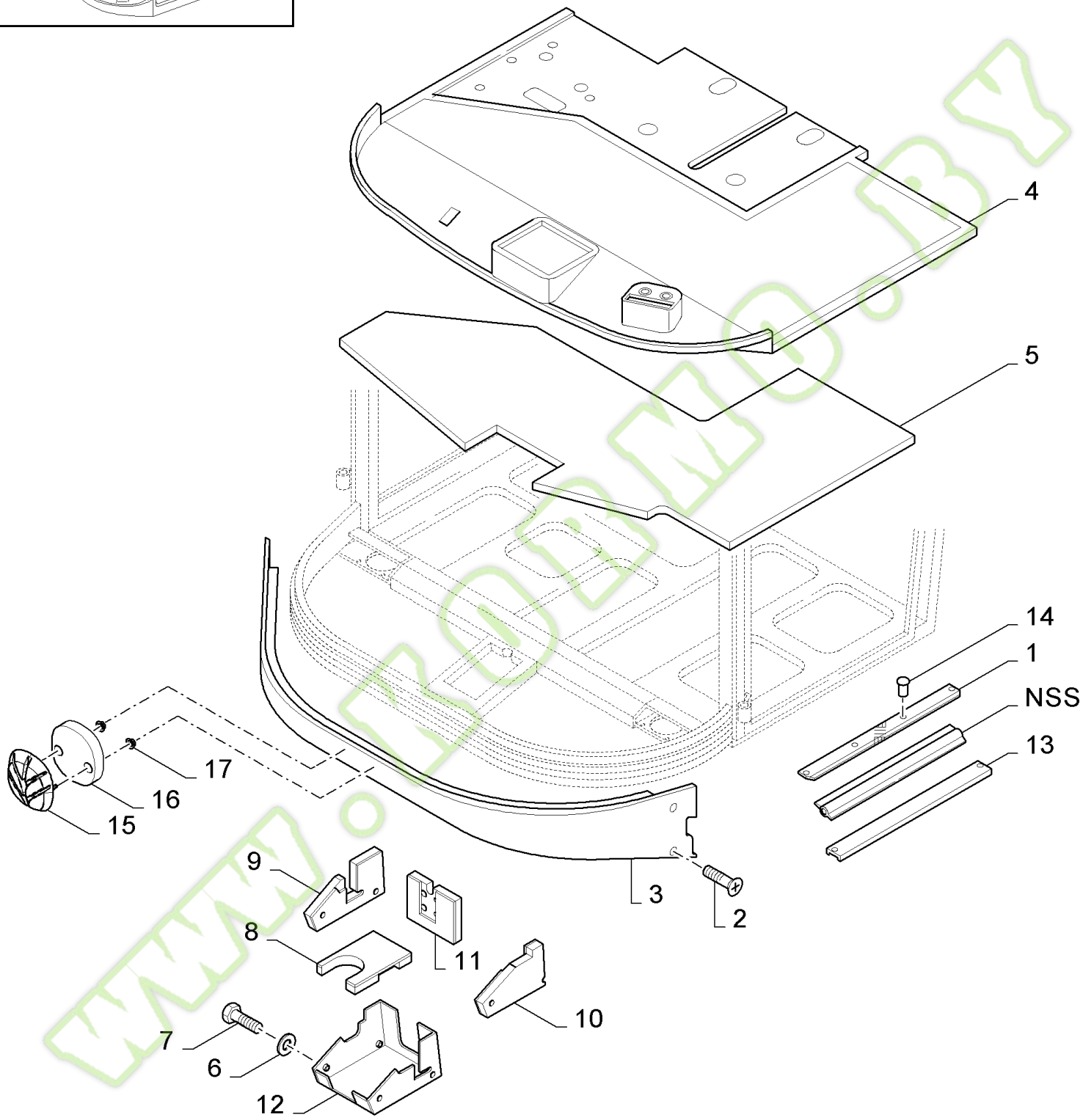

www.ROBMO.BY

FX50 SELF-PROPELLED FORAGE HARVESTER (10/02-)

10.02(01) CAB FLOOR

Ref	Part Number	Qty	Description
1	84001240	1	PLATE, COVER,
2	84007083	4	SCREW,
3	84429739	1	COVER, , BSN C357
3	84800877	1	COVER, , ASN D358
4	84435821	1	MAT,
5	84001569	1	PLATE,
6	322357	4	WASHER, LOCK, {PP:80322357} Belleville, M6, Belleville, M6
7	86508568	4	SCREW, Hex, M6 x 16, 8.8, M6x16
8	84011276	1	SOFT TRIM,
9	84011277	1	SOFT TRIM,
10	84011278	1	SOFT TRIM,
11	84011279	1	SOFT TRIM,
12	84015542	1	COVER,
13	84002922	1	PLATE, COVER,
14	425520	4	RIVET, {PP:80425520}
15	84447098	1	MAKERS BADGE, , ASN D358
16	84447432	1	SEAL, , ASN D358
17	86625060	2	NUT, , ASN D358

www.KOBMO.BY

10.03(01) CAB WINDOW PANES

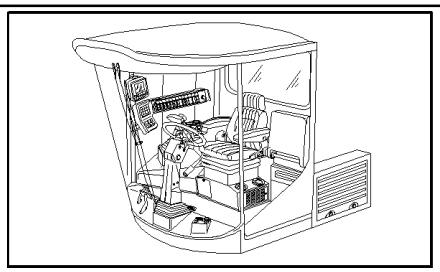

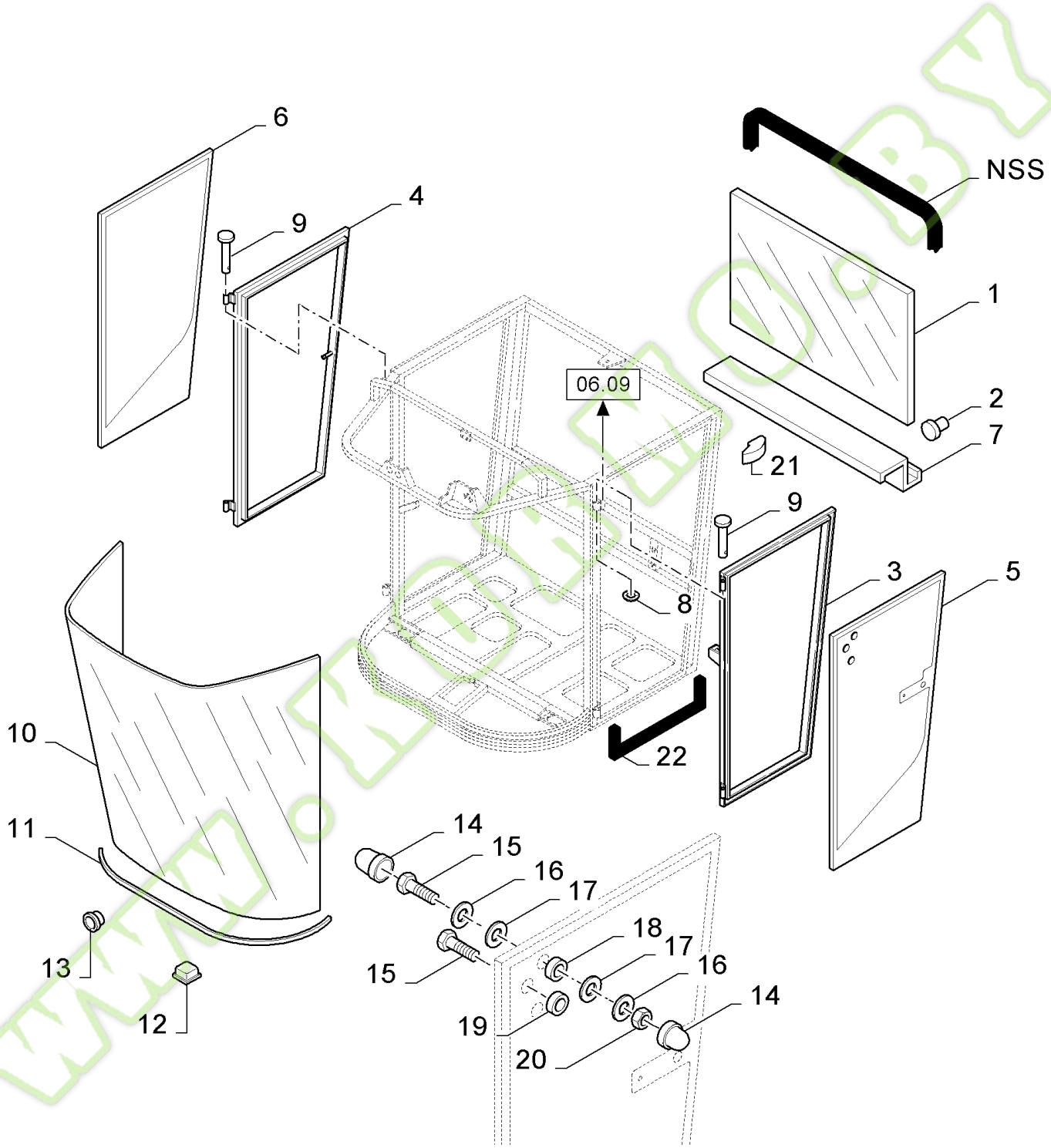

FX50 SELF-PROPELLED FORAGE HARVESTER (10/02-)

10.03(01) CAB WINDOW PANES

Ref	Part Number	Qty	Description
1	89812479	1	GLASS,
2	9992358	AR	ELASTIC STOP, {PP:89992358}
3	84607347	1	CAB DOOR, LH,
4	84607346	1	CAB DOOR, RH,
5	84002641	1	GLASS ASSY, CAB,
6	84002642	1	GLASS ASSY, CAB,
7	84001896	2	BRACKET,
8	431021	AR	RING, LOCKING, {PP:80431021}
9	84607358	4	PIN,
10	740775	1	GLASS, {PP:80740775}
11	9501985	AR	ELEMENT, SEALING, {PP:89501985} L=10M
12	84817394	AR	PLUG,
13	9992359	AR	PLUG, {PP:89992359}
14	458639	12	PLUG, {PP:80458639}
15	43127	6	BOLT, {PP:80043127} Hex, M8 x 25, 8.8, Cap, HH, CL 8.8, M8 x 1.25 x 25
16	84042302	12	WASHER,
17	338260	12	WASHER, {PP:80338260}
18	84002644	4	BUSHING,
19	84002643	2	BUSHING,
20	89706690	6	NUT, CL 8, M8 x 1.25 x 13.0
21	9500198	1	HOOK, {PP:89500198}
22	89850032	1	ELEMENT, SEALING, L=8,6M

www.KOBMO.BY

10.04(01) SCREEN WASHER FOR FRONT WINDOW

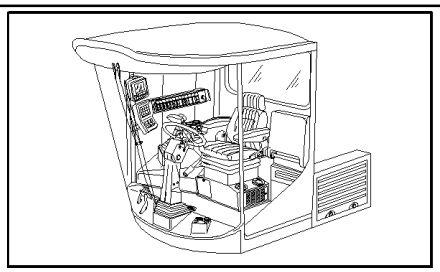

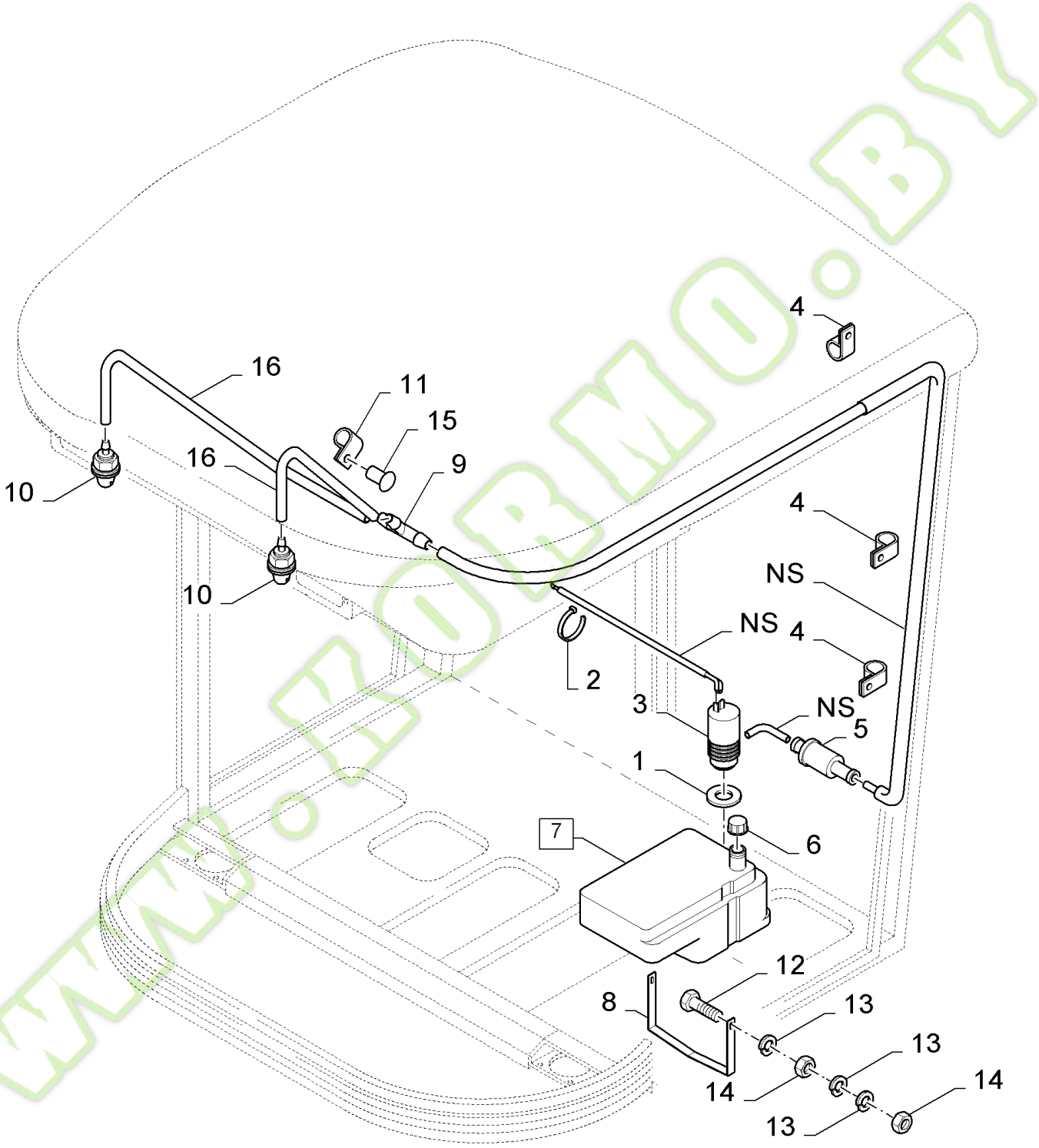

www.ROBMO.BY

FX50 SELF-PROPELLED FORAGE HARVESTER (10/02-)

10.04(01) SCREEN WASHER FOR FRONT WINDOW

Ref	Part Number	Qty	Description
1	84037531	1	ELEMENT, SEALING,
2	323597	3	STRAP, {PP:80323597}
3	84037533	1	PUMP, WATER,
4	9503930	3	CLAMP, {PP:89503930} RP16
5	84037530	1	VALVE, ADVANCE,
6	84041004	1	CAP,
7	84002498	1	RESERVOIR, WINDSH. WASH, (1,3,6)
8	84002499	1	CLAMP,
9	84037529	1	CONNECTION, 3 WAY,
10	84037532	2	NOZZLE,
11	353072	2	CLAMP, {PP:80353072}
12	86977786	2	BOLT, Hex, M6 x 25, 8.8, M6x25
13	322357	6	WASHER, LOCK, {PP:80322357} Belleville, M6, Belleville, M6
14	9706755	4	NUT, {PP:89706755} M6, Cl 8, M6
15	NS	3	NOT SERVICED,
16	85006504	AR	HOSE, L=4.7M

www.KOBMO.BY

10.05(01) CAB ROOF

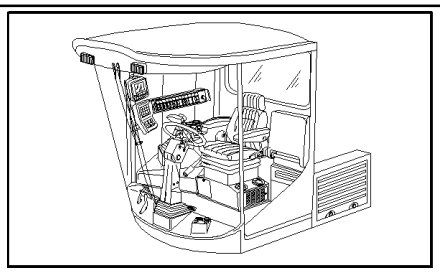

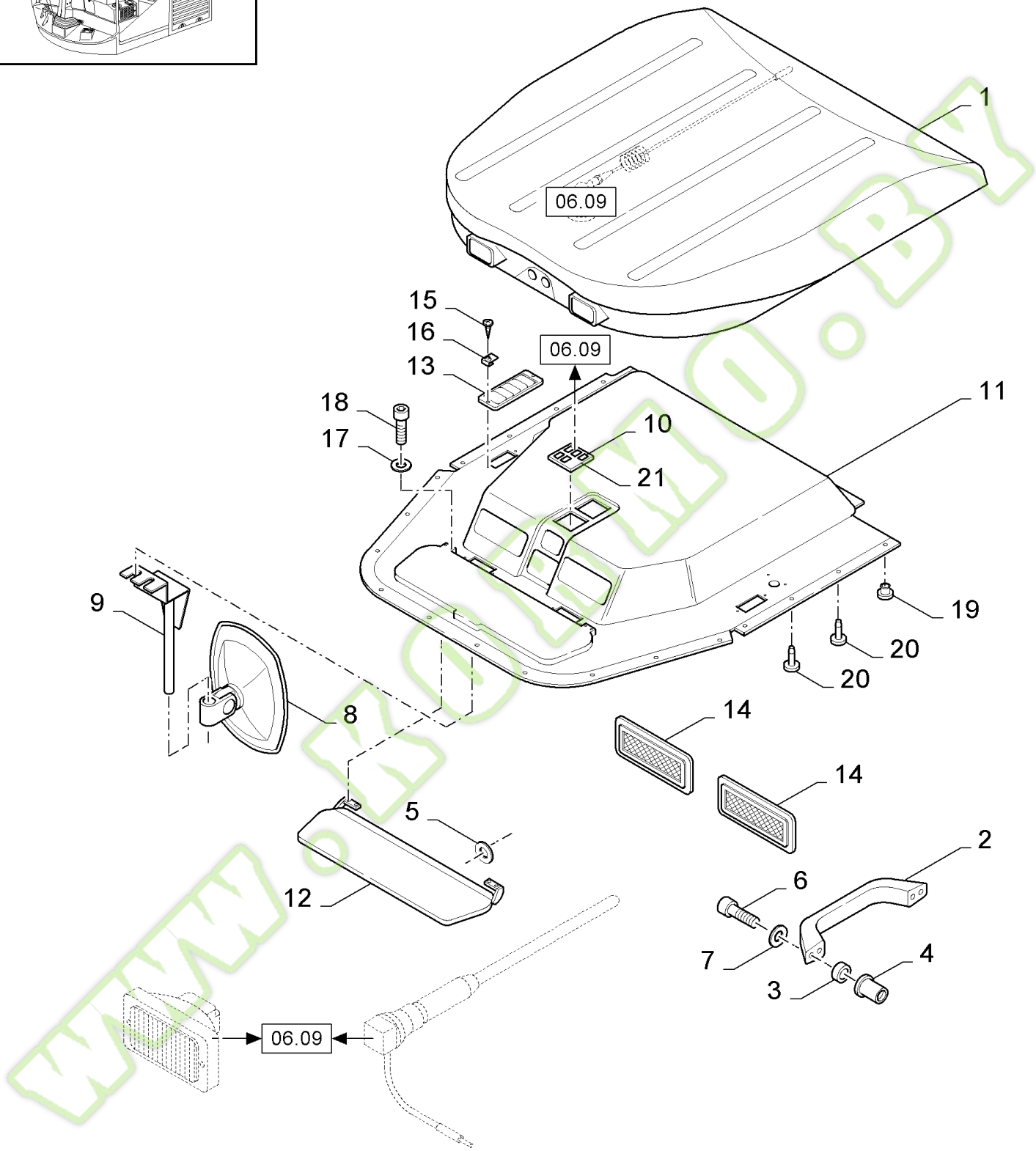

FX50 SELF-PROPELLED FORAGE HARVESTER (10/02-)

10.05(01) CAB ROOF

Ref	Part Number	Qty	Description
1	84429743	1	ROOF, , INCLUDING ANTENNA
2	9500185	1	HANDLE GRIP, {PP:89500185}
3	140015	2	WASHER, {PP:80140015}
4	353068	2	NUT, {PP:80353068} M6
5	378243	2	WASHER, {PP:80378243} 8MM
6	86511831	2	SCREW, Cross Pan Hd, M6 x 25, M6x25
7	322357	AR	WASHER, LOCK, {PP:80322357} Belleville, M6, Belleville, M6
8	84400980	1	MIRROR, REAR-VIEW,
9	84400981	1	SUPPORT,
10	9504368	5	PLUG, {PP:89504368}
11	84429898	1	SOFT TRIM,
12	9500213	1	SUN VISOR, {PP:89500213}
13	9504600	6	GRILLE, {PP:89504600}
14	F1NN9404587AA	2	PLATE, {PP:81868985}
15	9835804	AR	SCREW, {PP:89835804}
16	84005699	AR	CLIP,
17	322355	4	WASHER, LOCK, {PP:80322355} Belleville, M4, 4MM
18	86511042	4	SCREW, Cross Pan Hd, M4 x 16, M4x16
19	84014802	1	PLUG,
20	84000834	18	PLUG,
21	84002869	1	PLATE, COVER,

www.KOBMO.BY

10.06(01) WINDSCREEN WIPER, FRONT

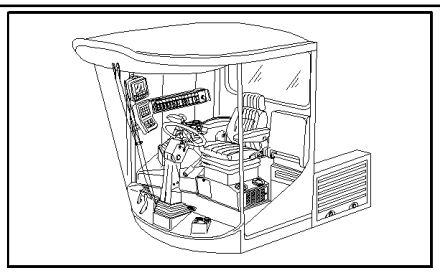

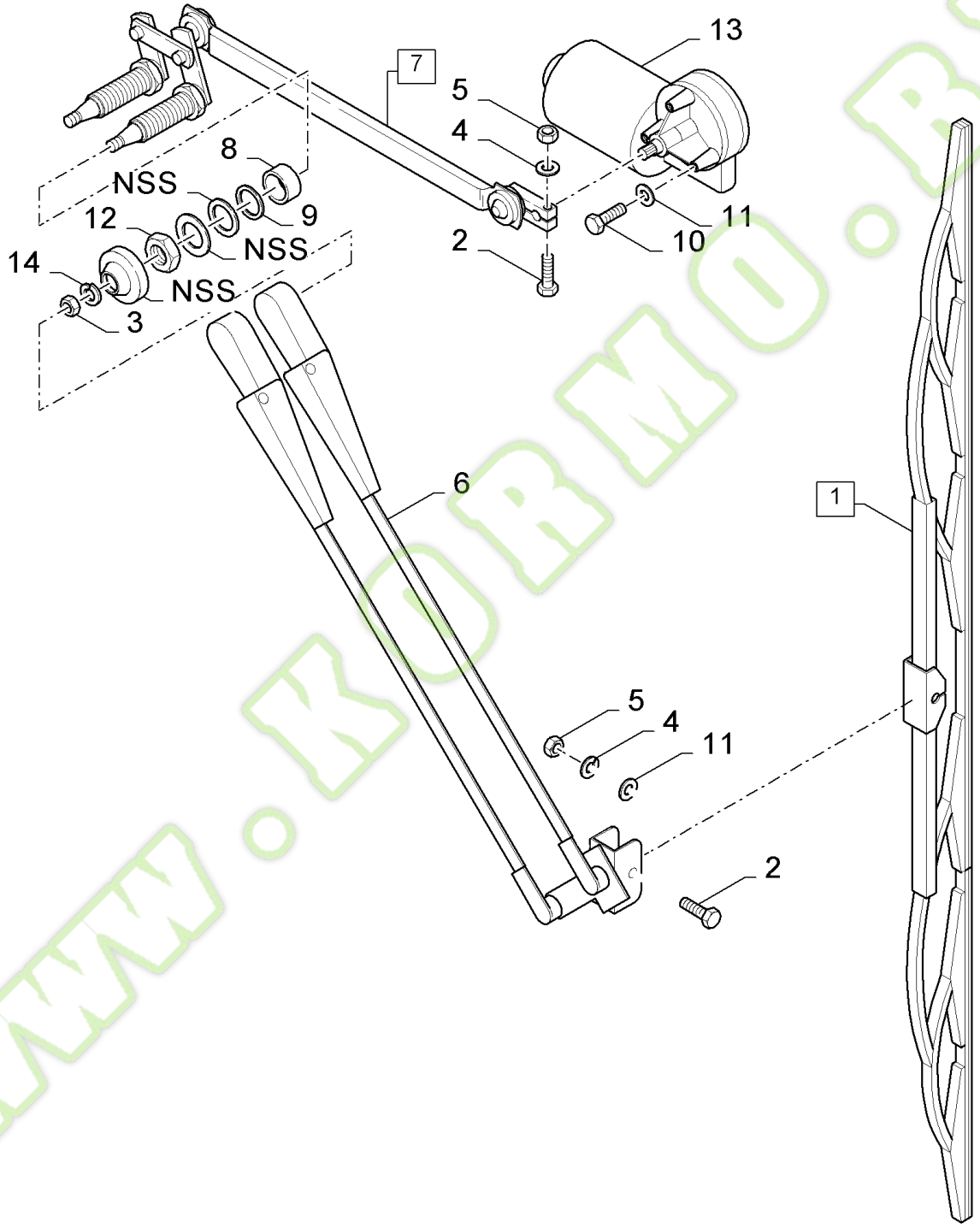

www.KOBMO.BY

FX50 SELF-PROPELLED FORAGE HARVESTER (10/02-)

10.06(01) WINDSCREEN WIPER, FRONT

Ref	Part Number	Qty	Description
1	84007417	1	WIPER BLADE, (2 to 5)
2	120101	2	SCREW, {PP:80120101} Hex, M6 x 30, 8.8, Full Thd, M6x30
3	100016	2	NUT, {PP:80100016} M10, Cl 8, M10
4	140015	2	WASHER, {PP:80140015} 6MM
5	353308	2	NUT, {PP:80353308} M6 x 1, Cl 8, M6
6	84007418	1	ARM,
7	84007420	1	ARM, (8 to 14)
8	32406	1	SPACER, {PP:80032406}
9	412568	2	WASHER, {PP:80412568}
10	80120099	3	SCREW, Hex, M6 x 16, 8.8, M6x16
11	322357	4	WASHER, LOCK, {PP:80322357} Belleville, M6, Belleville, M6
12	412569	2	NUT, {PP:80412569} M26 x 1, Cl 8, M26
13	84007419	1	WIPER MOTOR,
14	140045	2	WASHER, LOCK, {PP:80140045} Belleville, M10,

www.KOBMO.BY

10.07(01) WINDSCREEN WIPER, REAR

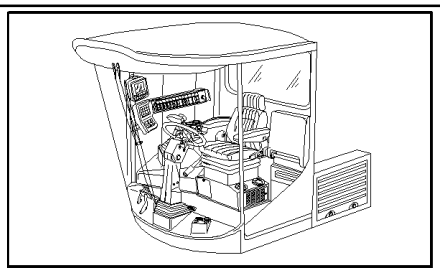

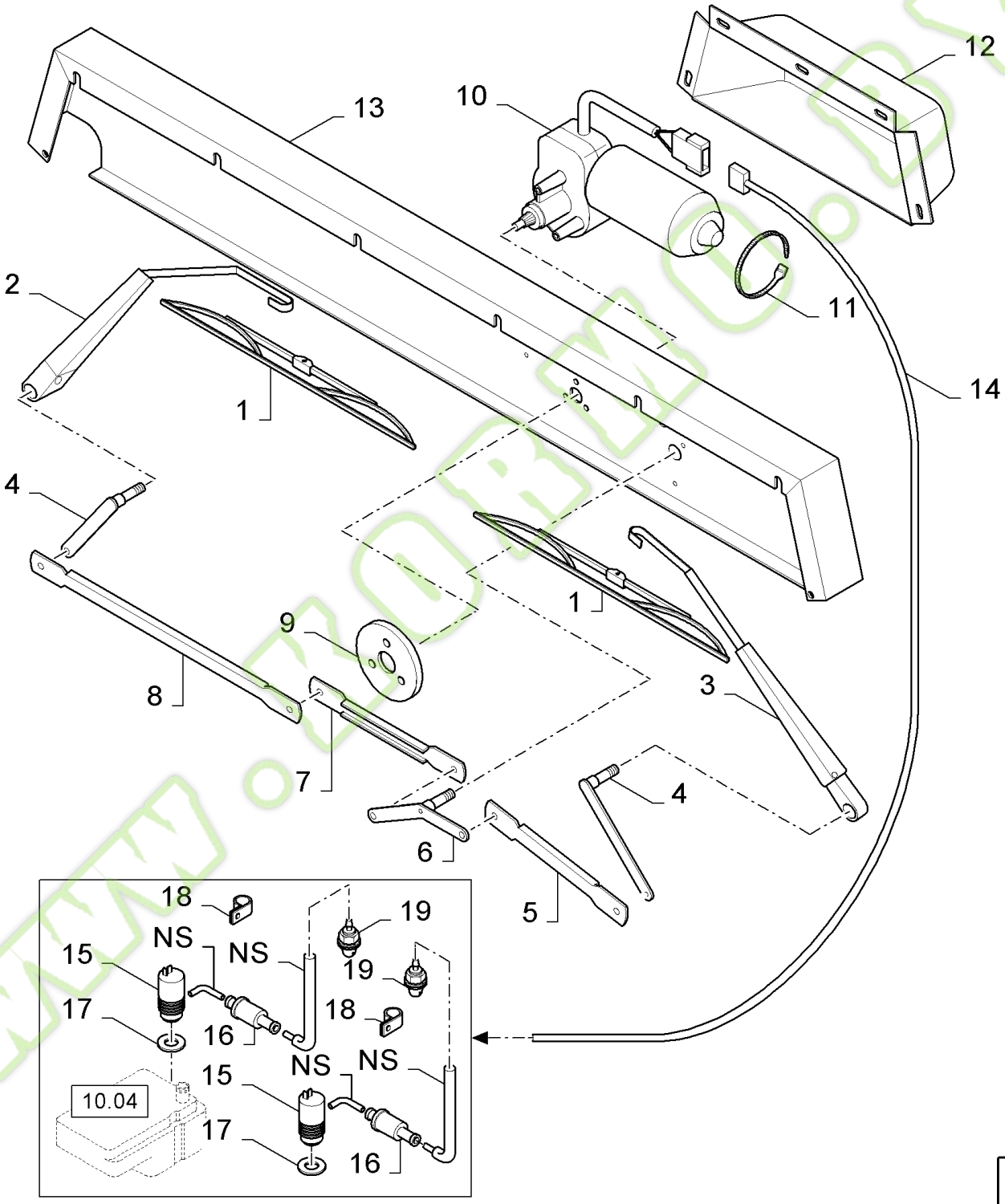

FX50 SELF-PROPELLED FORAGE HARVESTER (10/02-)

10.07(01) WINDSCREEN WIPER, REAR

Ref	Part Number	Qty	Description
1	84041733	2	WIPER BLADE,
2	84041735	1	WIPER ARM, RH
3	84041734	1	WIPER ARM, LH
4	84042633	2	LEVER,
5	84042634	1	LEVER,
6	84042635	1	LEVER,
7	84042636	1	ROD,
8	84042638	1	LEVER,
9	84042637	1	LEVER,
10	84041732	1	MOTOR, ELECTRIC,
11	396718	1	STRAP, {PP:80396718}
12	84002948	1	SHIELD,
13	84002451	1	PLATE, COVER,
14	84002937	1	HARNESS, WIRE,
15	84037533	2	PUMP, WATER, 12V
16	84037530	2	VALVE, ADVANCE,
17	84037531	2	ELEMENT, SEALING,
18	332401	5	CLAMP, WIRE, {PP:80332401}
18	353072	9	CLAMP, {PP:80353072}
19	84037532	2	NOZZLE,

www.KOBMO.BY

10.08(01) WINDSCREEN WIPER, SIDE

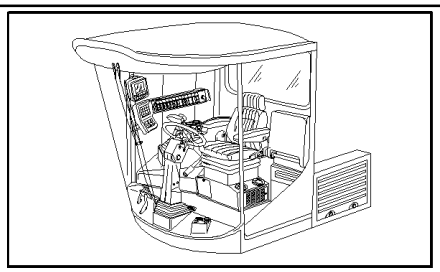

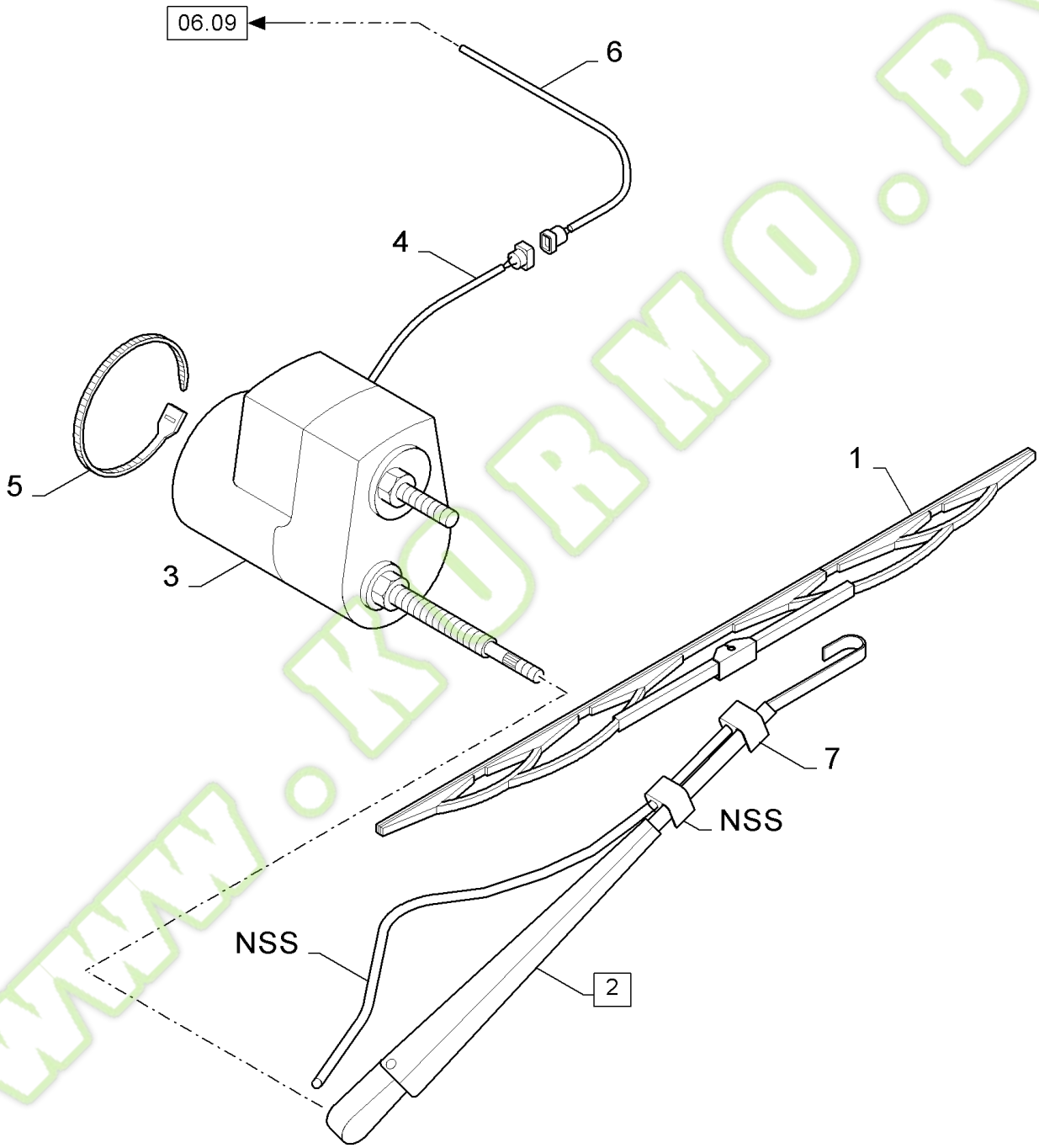

www.KOBMO.BY

FX50 SELF-PROPELLED FORAGE HARVESTER (10/02-)

10.08(01) WINDSCREEN WIPER, SIDE

Ref	Part Number	Qty	Description
1	84041733	2	WIPER BLADE,
2	84041736	1	WIPER ARM, RH (7)
2	84041741	1	WIPER ARM, LH (7)
3	84041738	1	MOTOR, ELECTRIC, RH
3	84041737	1	MOTOR, ELECTRIC, LH
4	450238	2	CONNECTOR, {PP:80450238} 4-POLIG
5	89993154	2	CLAMP,
6	84002938	1	HARNESS, WIRE,
7	84058729	2	NOZZLE, LUB. OIL JET,

WWW.KOBMO.BY

10.09(01) DOOR LOCK

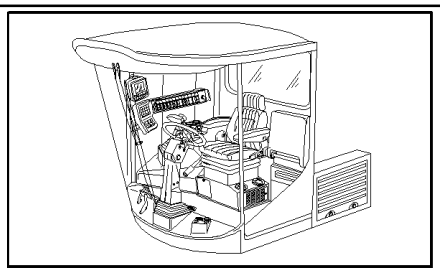

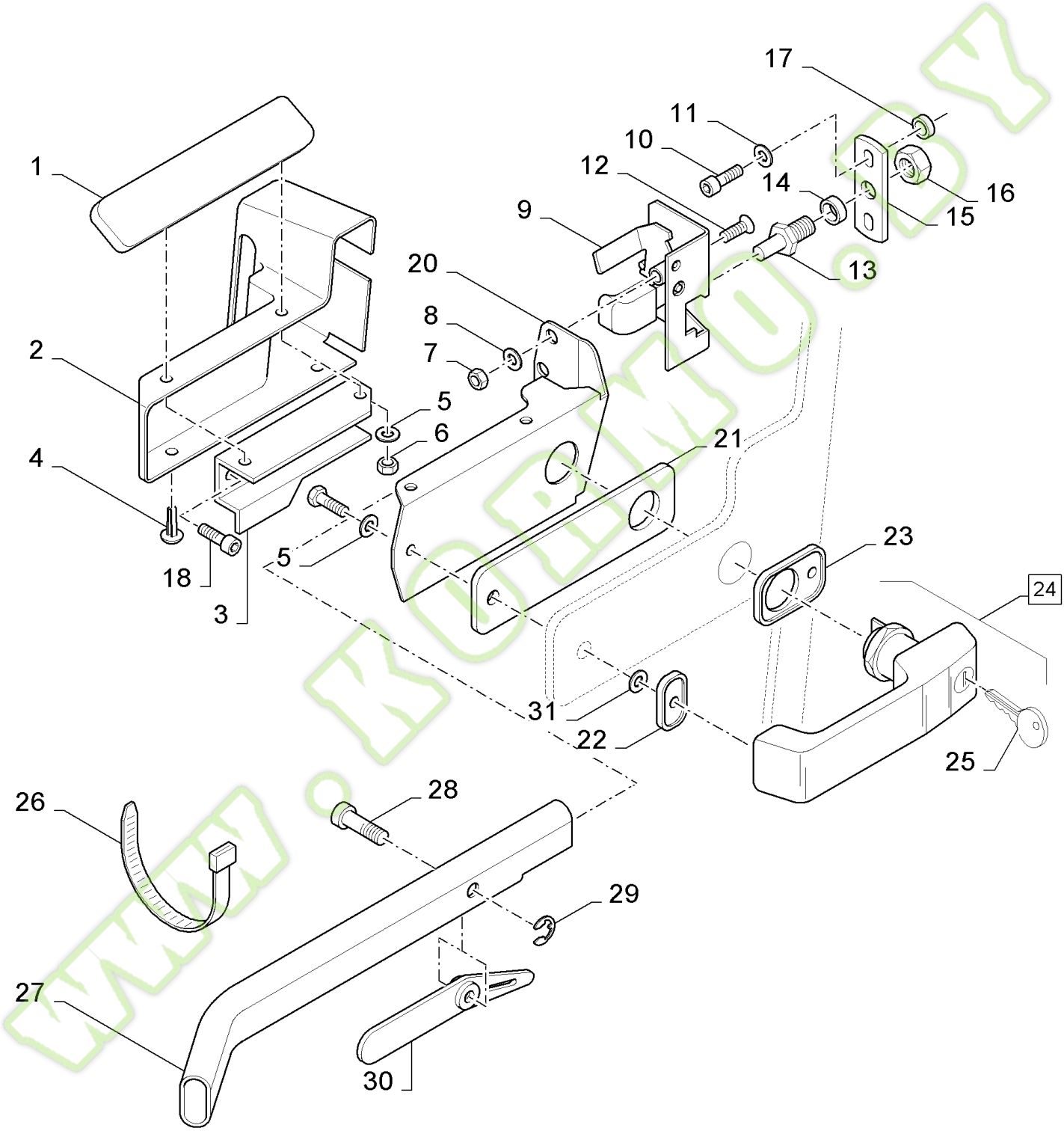

www.KOBMOD.BY

FX50 SELF-PROPELLED FORAGE HARVESTER (10/02-)

10.09(01) DOOR LOCK

Ref	Part Number	Qty	Description
1	84001710	1	PLATE,
2	9594290	1	COVER, {PP:89594290}
3	84001709	1	SUPPORT,
4	84814976	2	PLUG,
5	322357	3	WASHER, LOCK, {PP:80322357} Belleville, M6, Belleville, M6
6	9706755	2	NUT, {PP:89706755} M6, Cl 8, M6
7	89706690	2	NUT, CL 8, M8 x 1.25 x 13.0
8	322358	2	WASHER, LOCK, {PP:80322358} Belleville, M8, 8MM
9	9817980	1	LOCK, {PP:89817980}
10	84007540	2	SCREW, M6x25
11	86588450	4	WASHER, M6, 6MM
12	300352	2	SCREW, {PP:80300352} Hex Flat Hd, M8 x 40, 4.8, M8x40
13	9594675	1	STOP, {PP:89594675}
14	750159	1	RING, {PP:80750159}
15	9812327	1	BRACKET, {PP:89812327}
16	9818861	1	NUT, {PP:89818861} M12 x 1, Cl 8, M12x1
17	396606	2	RING, {PP:80396606}
18	380426	2	SCREW, {PP:80380426} M6x10
19	43117	1	SCREW, {PP:80043117} Hex, M6 x 30, 8.8, M6x30
20	84001515	1	SUPPORT,
21	9593403	1	GASKET, {PP:89593403}
22	9513969	1	GASKET, {PP:89513969}
23	9513968	1	GASKET, {PP:89513968}
24	9513970	1	HANDLE, {PP:89513970} (25)
25	84032451	1	KEY, DOOR LOCK, , HAS CODE 201 ON IT
26	747159	3	CLAMP, {PP:80747159}
27	84001707	1	TUBE,
28	84001708	1	PIN,
29	89992582	1	CIRCLIP,
30	84001706	1	LEVER,
31	264036	1	BUSHING, {PP:80264036}

www.KUBMO.BY

10.10(01) EMERGENCY DOOR LOCK

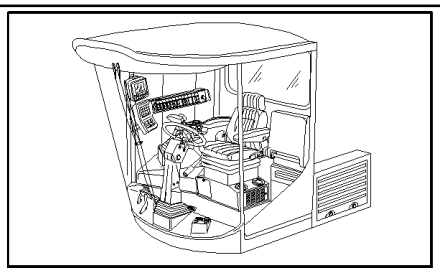

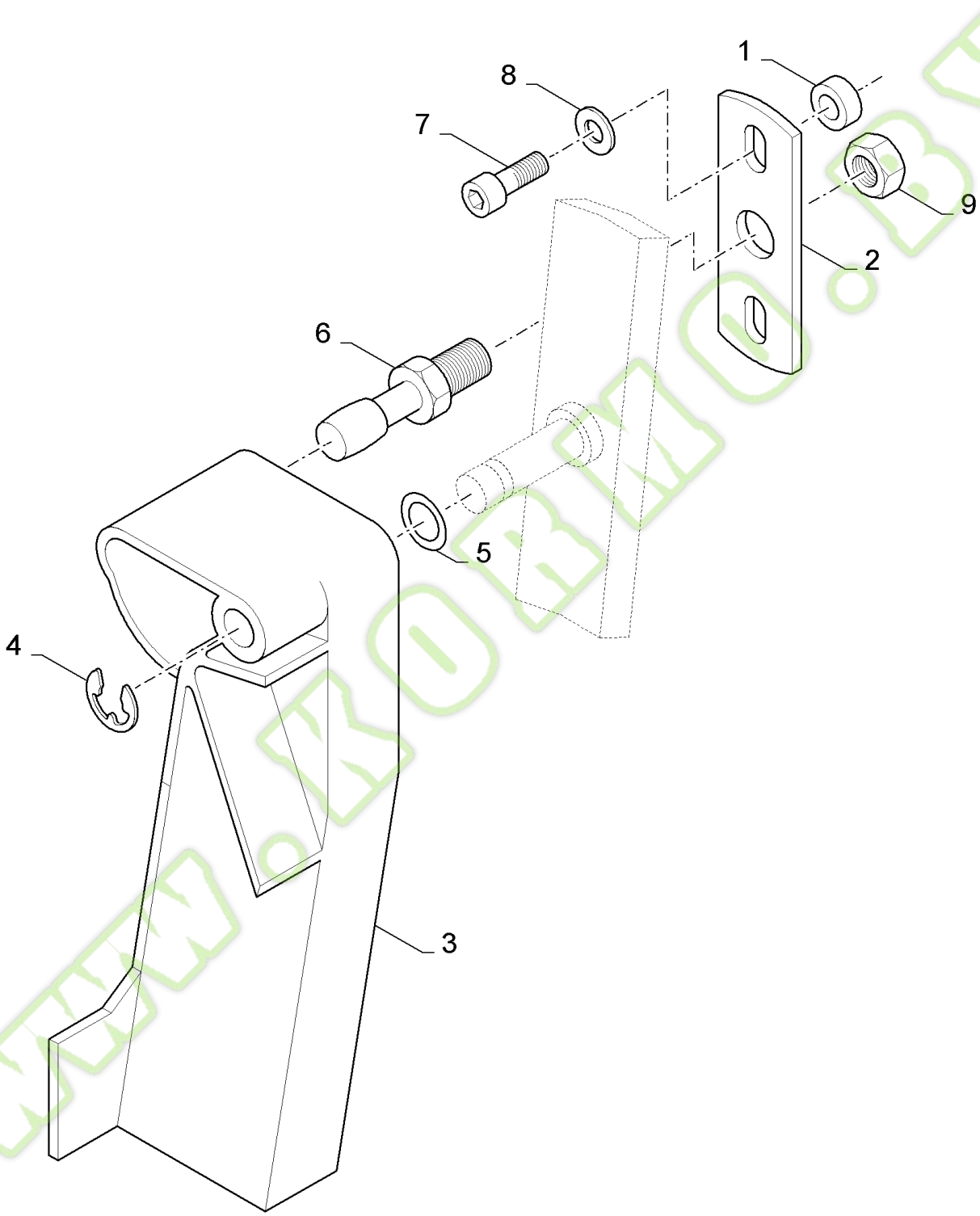

WWW.KOBMO.BY

FX50 SELF-PROPELLED FORAGE HARVESTER (10/02-)

10.10(01) EMERGENCY DOOR LOCK

Ref	Part Number	Qty	Description
1	396606	2	RING, {PP:80396606}
2	9812327	1	BRACKET, {PP:89812327}
3	89992367	1	HANDLE,
4	89992582	1	CIRCLIP,
5	89992578	1	O-RING,
6	E7NN94296N05AC	1	PIN, SPLIT (COTTER), {PP:81871857}
7	84007540	2	SCREW, M6x25
8	84007539	2	WASHER,
9	100016	1	NUT, {PP:80100016} M10, Cl 8, M10

www.KOBMO.BY

10.11(01) UPHOLSTERY

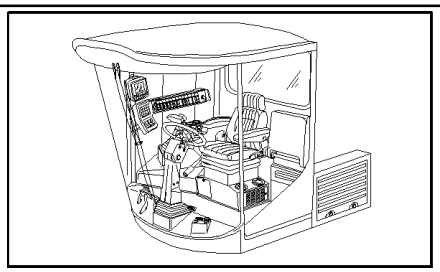

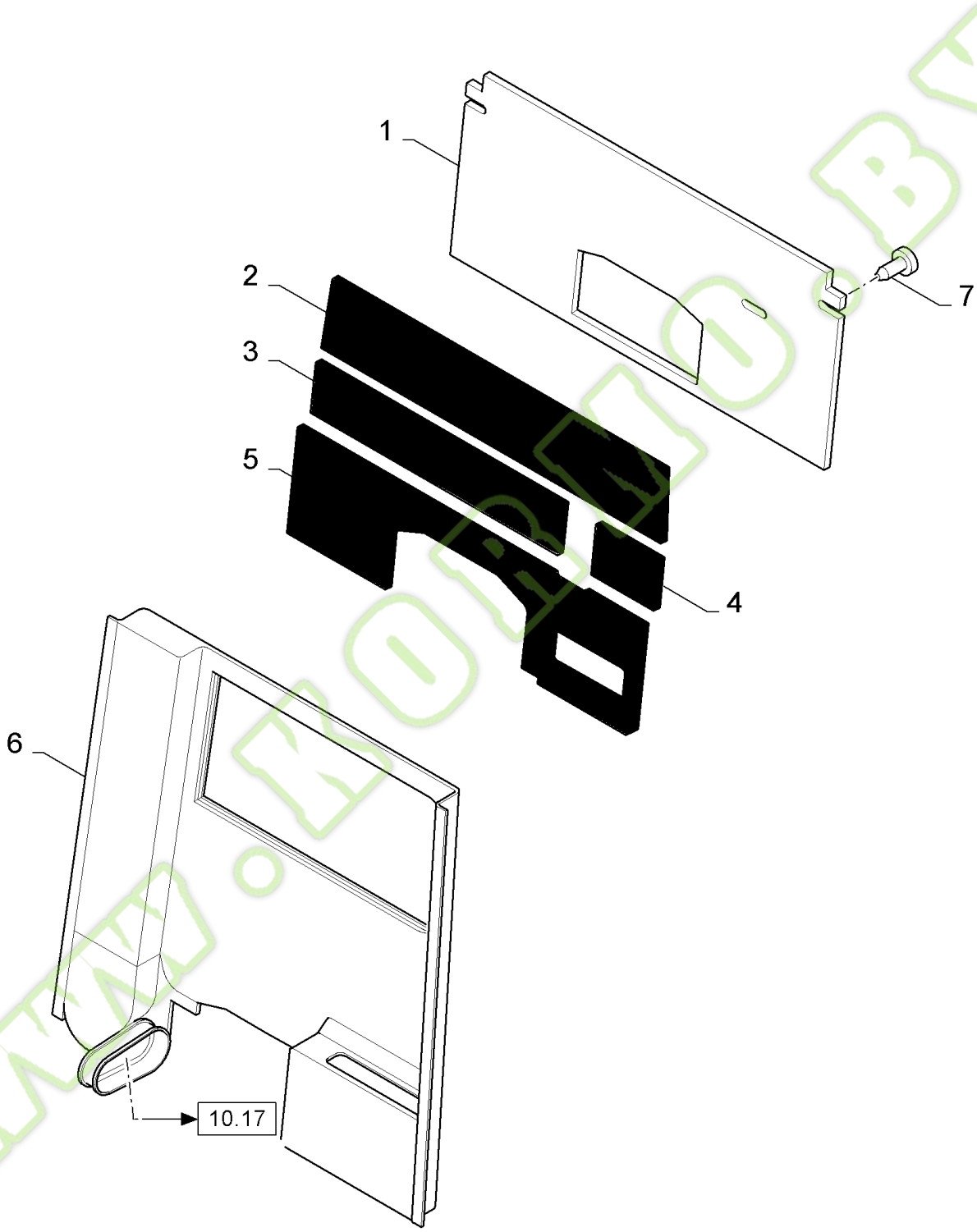

www.KOMO.BY

FX50 SELF-PROPELLED FORAGE HARVESTER (10/02-)

10.11(01) UPHOLSTERY

Ref	Part Number	Qty	Description
1	84002452	1	PLATE,
2	84035098	1	SOFT TRIM,
3	84001242	1	SOFT TRIM,
4	84001243	1	SOFT TRIM,
5	84001244	1	SOFT TRIM,
6	84001314	1	SOFT TRIM,
7	336455	8	PLUG, {PP:80336455}

WWW.KORMO.BY

10.12(01) PIVOTING STEERING COLUMN

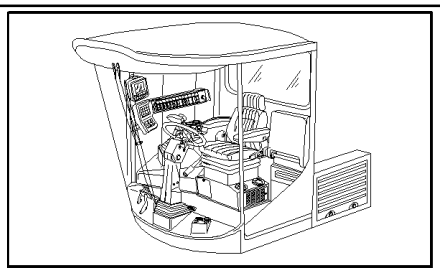

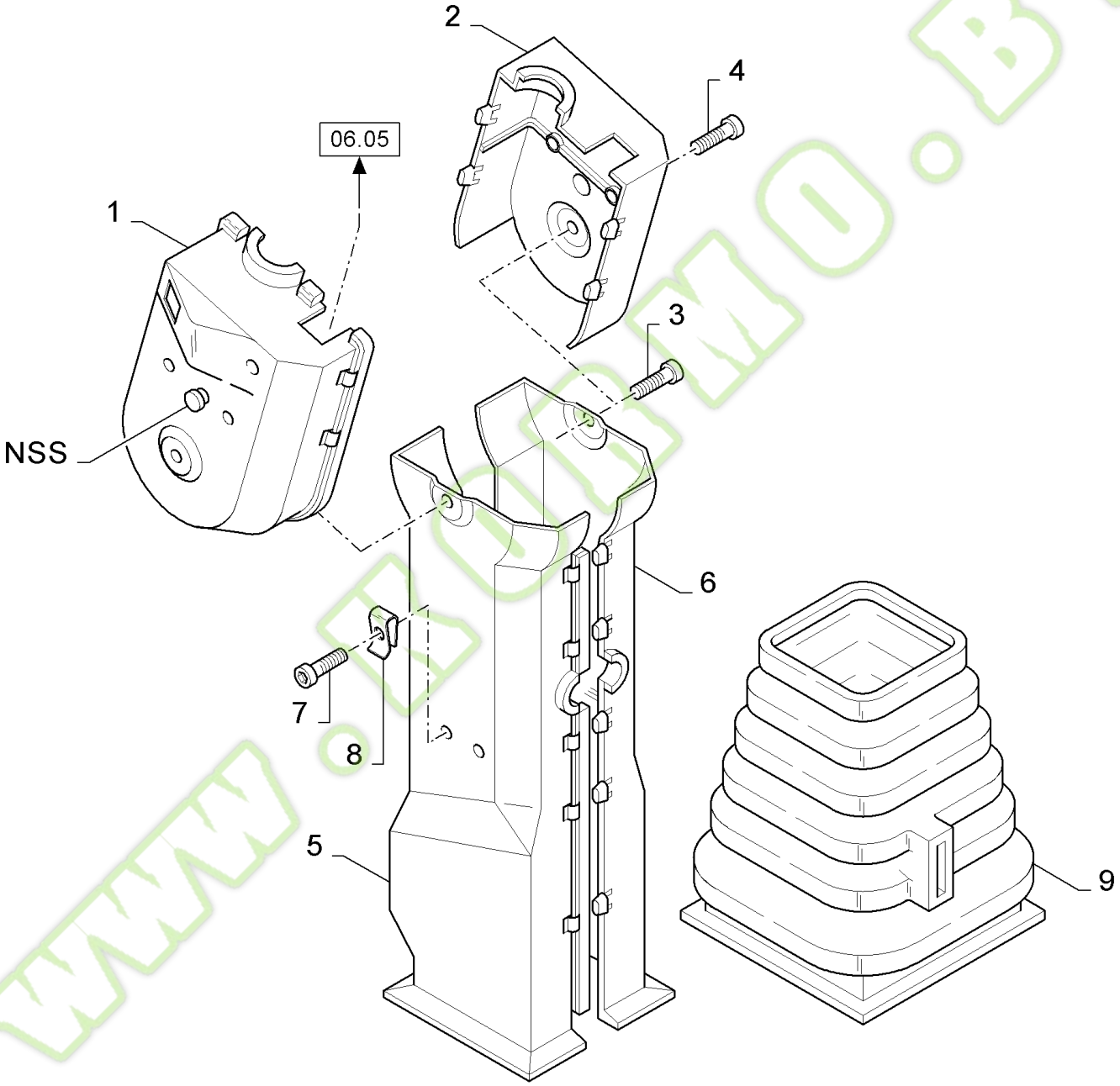

www.KOBMO.BY

FX50 SELF-PROPELLED FORAGE HARVESTER (10/02-)

10.12(01) PIVOTING STEERING COLUMN

Ref	Part Number	Qty	Description
1	84022426	1	COVER,
2	84014916	1	COVER,
3	43128	1	SCREW, {PP:80043128} Hex, M8 x 30, 8.8, Cap, HH, CL 8.8, M8 x 1.25 x 30
4	120007	4	SCREW, {PP:80120007} Cross Pan Hd, M4 x 16, M14x14
5	84014918	1	COVER,
6	84014963	1	COVER,
7	9819754	4	SCREW, {PP:89819754}
8	9819712	4	CLIP, {PP:89819712}
9	9819608	1	BELLOWS, {PP:89819608}

www.KOBMO.BY

10.13(01) PIVOTING STEERING COLUMN

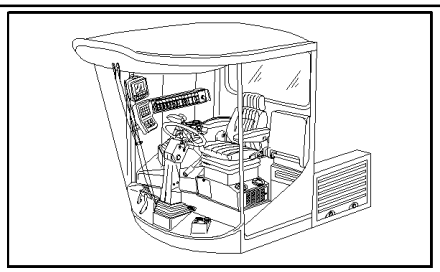

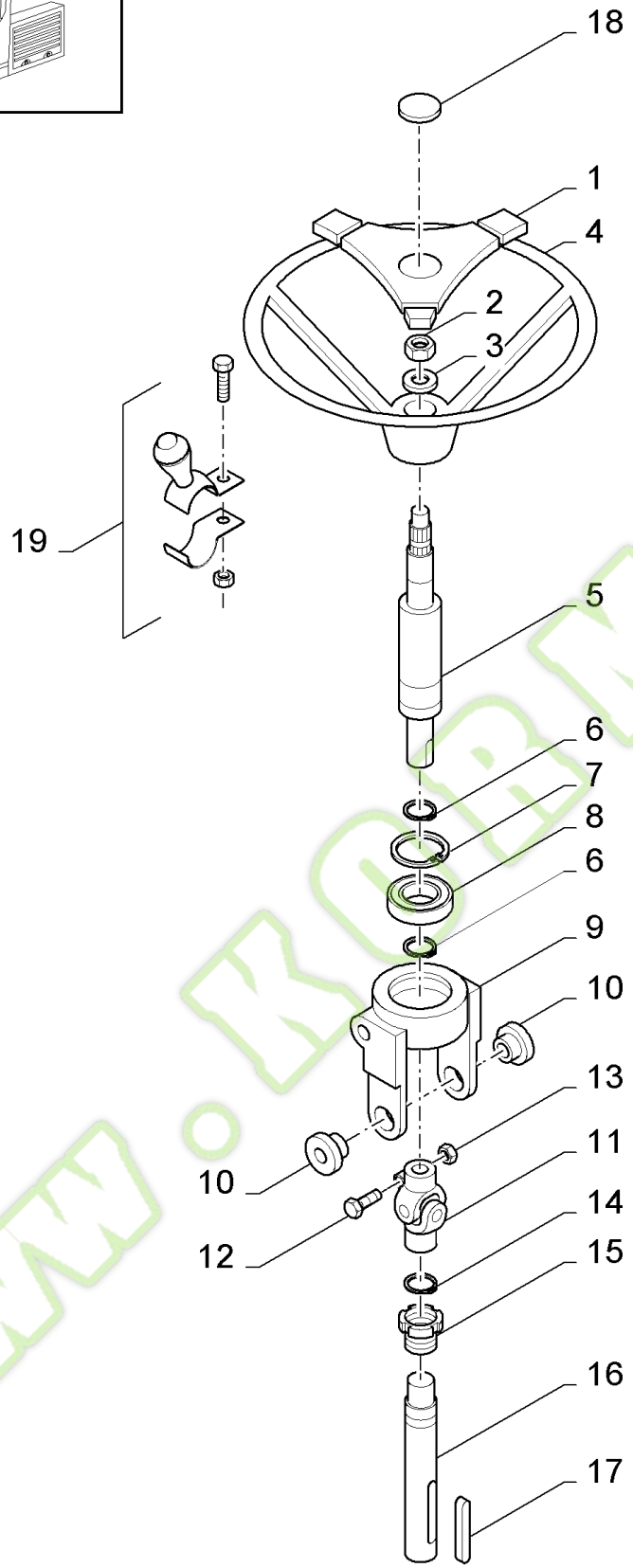

www.KOBMO.BY

FX50 SELF-PROPELLED FORAGE HARVESTER (10/02-)

10.13(01) PIVOTING STEERING COLUMN

Ref	Part Number	Qty	Description
1	84015153	1	COVER,
2	86511416	1	NUT, Jam, 5/8"-18, G2, 5/8"-18UNF
3	140048	1	WASHER, LOCK, {PP:80140048} Belleville, M16, 16MM
4	F0NN3600AA	1	STEERING WHEEL, {PP:81862887}
5	84014884	1	SHAFT,
6	370024	2	RING, SNAP, {PP:80370024}
7	80300645	1	CIRCLIP,
8	412669	1	BEARING ASSY, {PP:80412669}
9	84014885	1	YOKE,
10	84014886	2	BUSHING,
11	84056200	1	JOINT, UNIVERSAL,
12	412479	1	SCREW, {PP:80412479} Hex, M8 x 35, 8.8, M8x35
13	100067	1	NUT, {PP:80100067} M8 x 1.25", Cl 8, M8
14	370001	1	CIRCLIP, {PP:80370001}
15	84014883	1	NUT,
16	84014880	1	SHAFT,
17	84014882	1	KEY,
18	84015154	1	EMBLEM,
19	84432447	1	KNOB,

www.KOBMO.BY

10.14(01) PIVOTING STEERING COLUMN

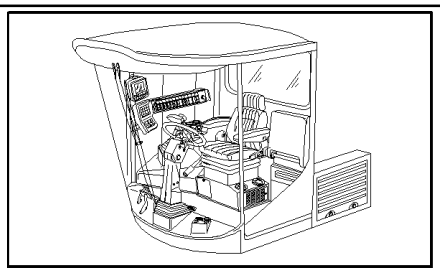

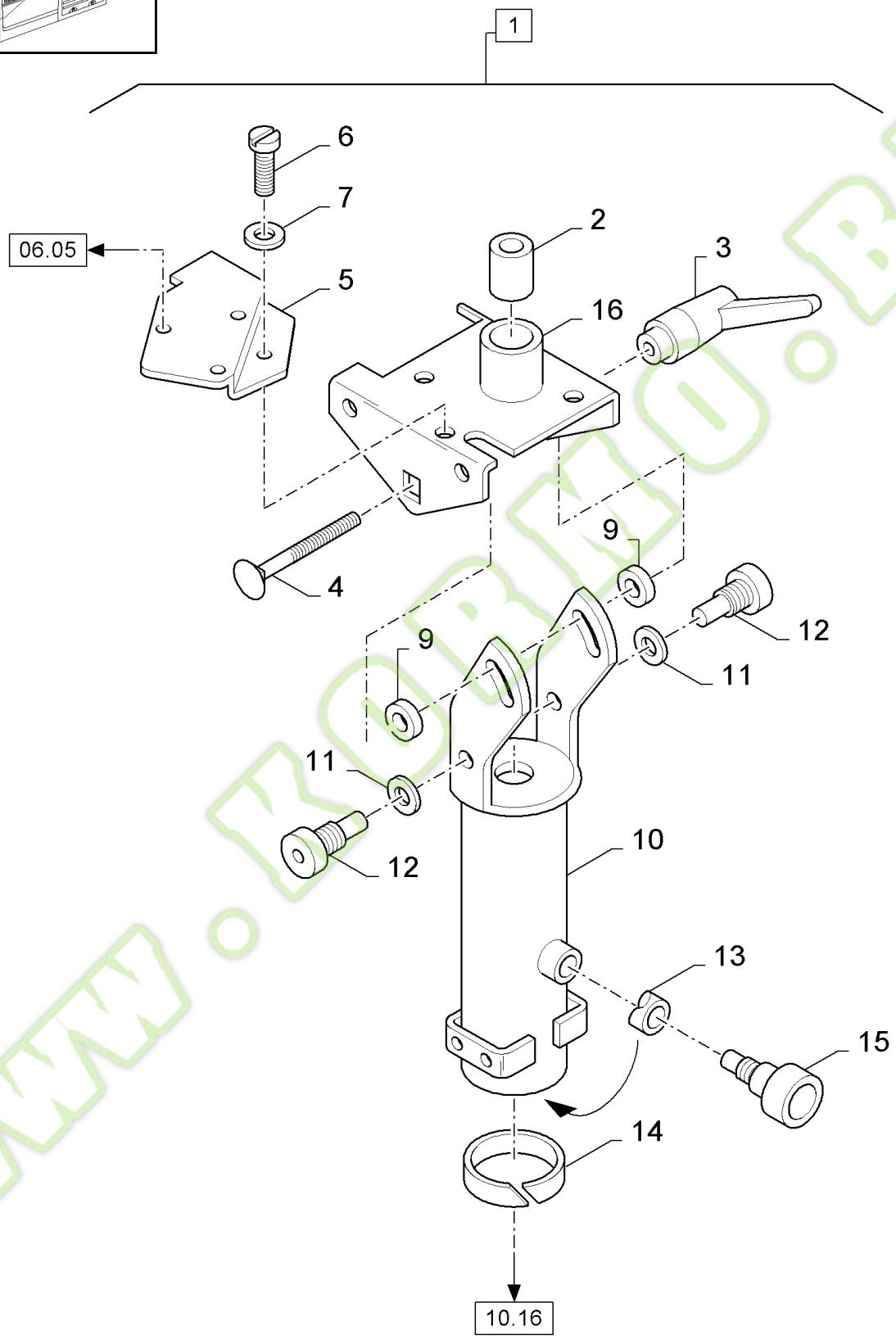

www.KOBMO.BY

FX50 SELF-PROPELLED FORAGE HARVESTER (10/02-)

10.14(01) PIVOTING STEERING COLUMN

Ref	Part Number	Qty	Description
1	84101884	1	STEERING COLUMN, , Incl.figs. 10.14 to 10.16, WITHOUT AUTOPILOT, NOT FOR NA
1	84101885	1	STEERING COLUMN, , WITH AUTOPILOT, NOT FOR NA
1	84101883	1	STEERING COLUMN, , WITHOUT AUTOPILOT, FOR NA ONLY
1	84101909	1	STEERING COLUMN, , WITH AUTOPILOT, FOR NA ONLY
2	84014911	1	BUSHING,
3	84014891	1	HANDLE,
4	84014888	1	SCREW,
5	84014914	1	SUPPORT,
6	321803	2	BOLT, {PP:80321803} Cross Pan Hd, M4 x 10, M4x10
7	322355	2	WASHER, LOCK, {PP:80322355} Belleville, M4,
8	84014889	1	WASHER, LOCK,
9	84014890	1	WASHER, LOCK,
10	84014875	1	STEERING COLUMN,
11	140028	2	WASHER, {PP:80140028} M10,
12	84014887	2	SCREW,
13	84014910	1	WASHER,
14	84014877	2	SLEEVE,
15	84014909	1	KNOB,
16	84014912	1	SUPPORT,

www.KOBMO.BY

10.15(01) PIVOTING STEERING COLUMN

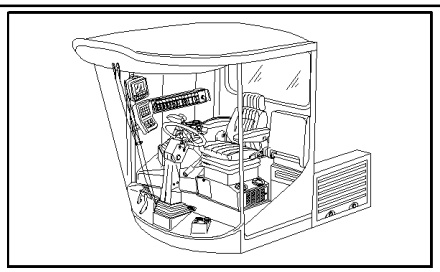

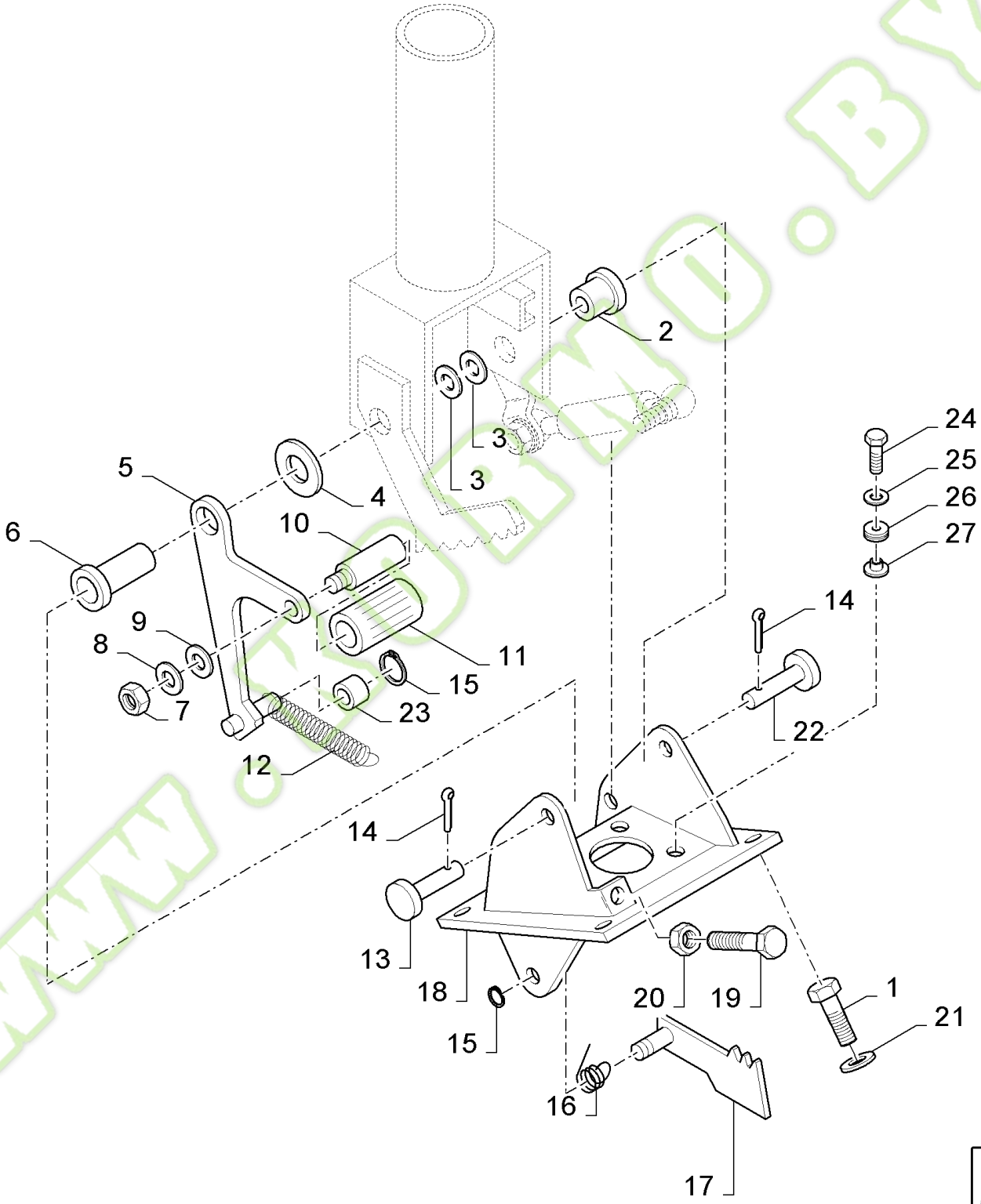

www.SOBMO.BY

FX50 SELF-PROPELLED FORAGE HARVESTER (10/02-)

10.15(01) PIVOTING STEERING COLUMN

Ref	Part Number	Qty	Description
1	80120104	1	SCREW, M8x20
2	84014896	1	BUSHING,
3	325291	2	WASHER, {PP:80325291}
4	84014898	1	WASHER,
5	84014899	1	LEVER,
6	84014897	1	BUSHING,
7	100016	1	NUT, {PP:80100016} M10, Cl 8, M10
8	140028	1	WASHER, {PP:80140028} M10,
9	378244	1	WASHER, LOCK, {PP:80378244}
10	84014905	1	PEDAL,
11	84014906	1	PAD, RUBBER,
12	84014904	1	SPRING,
13	84014894	1	PIN,
14	130007	2	PIN, SPLIT (COTTER), {PP:80130007} M4 x 25,
15	84014901	2	CIRCLIP,
16	84014903	1	SPRING,
17	84014902	1	TAB, LOCKING,
18	84014893	1	SUPPORT,
19	43128	6	SCREW, {PP:80043128} Hex, M8 x 30, 8.8, Cap, HH, CL 8.8, M8 x 1.25 x 30
20	89706690	2	NUT, CL 8, M8 x 1.25 x 13.0
21	322358	6	WASHER, LOCK, {PP:80322358} Belleville, M8,
22	84014895	1	PIN,
23	84014900	1	BUSHING,
24	43140	4	BOLT, {PP:80043140} Hex, M10 x 30, 8.8, M10x30
25	140045	4	WASHER, LOCK, {PP:80140045} Belleville, M10, 10MM
26	89514935	4	SHOCK ABSORBER,
27	89819785	4	FLANGE,

www.KOBMO.BY

10.16(01) PIVOTING STEERING COLUMN

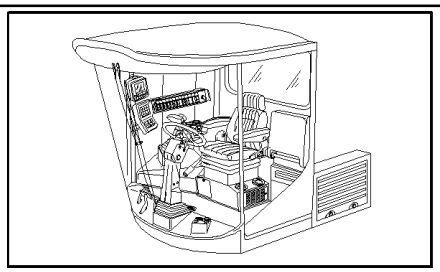

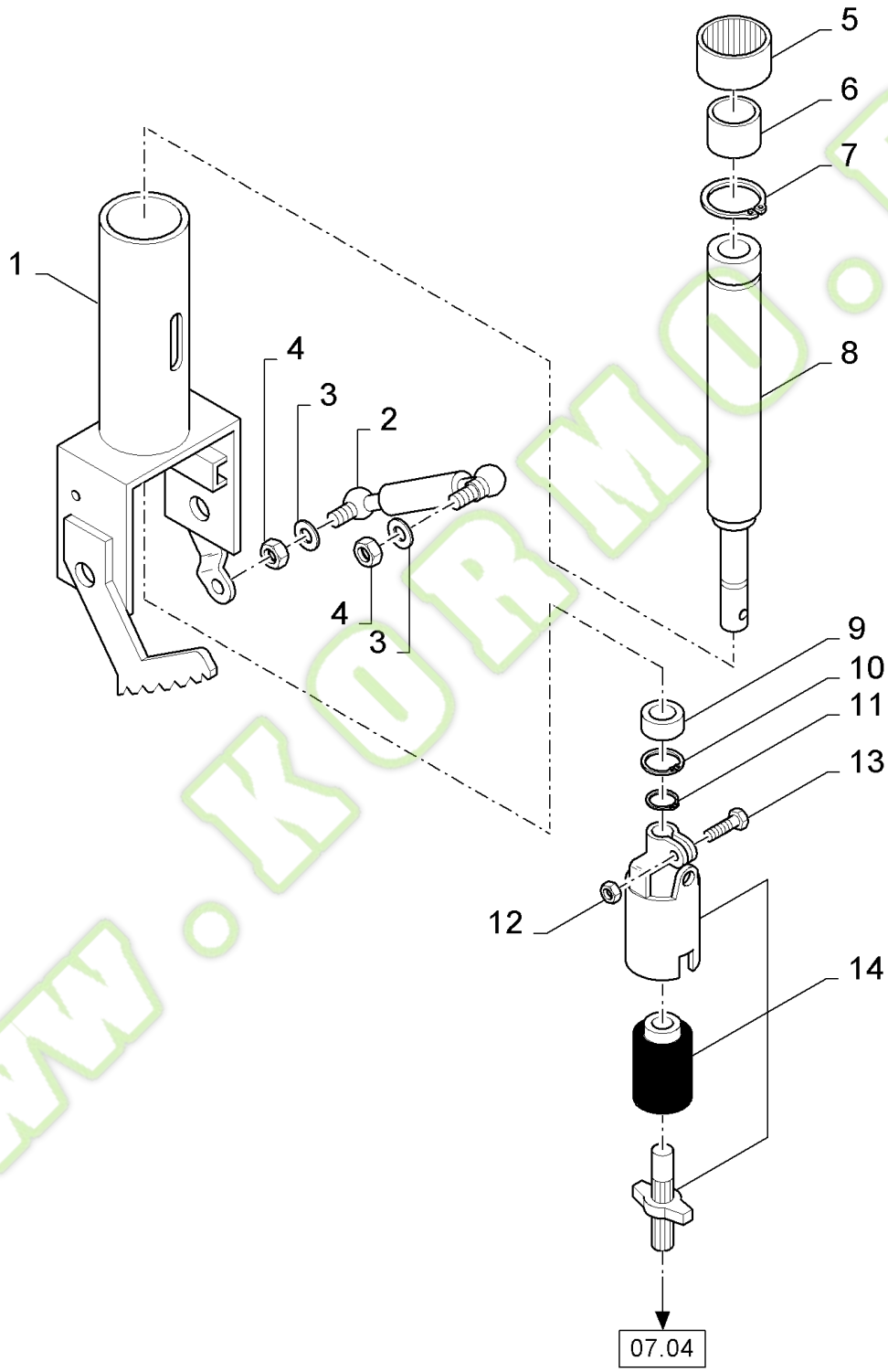

www.KOBMO.BY

FX50 SELF-PROPELLED FORAGE HARVESTER (10/02-)

10.16(01) PIVOTING STEERING COLUMN

Ref	Part Number	Qty	Description
1	84014875	1	STEERING COLUMN,
2	84014907	1	GAS STRUT,
3	322358	2	WASHER, LOCK, {PP:80322358} Belleville, M8,
4	89706690	2	NUT, CL 8, M8 x 1.25 x 13.0
5	84014913	1	BEARING ASSY,
6	84014878	1	BUSHING,
7	370004	1	CIRCLIP, {PP:80370004}
8	84014879	1	GUIDE,
9	412669	1	BEARING ASSY, {PP:80412669}
10	80300645	1	CIRCLIP,
11	370024	1	RING, SNAP, {PP:80370024}
12	100067	1	NUT, {PP:80100067} M8 x 1.25", Cl 8, M8
13	412479	1	SCREW, {PP:80412479} Hex, M8 x 35, 8.8, M8x35
14	84014908	1	JOINT, UNIVERSAL,

www.KOBMO.BY

10.17(01) AIR CONDITIONER

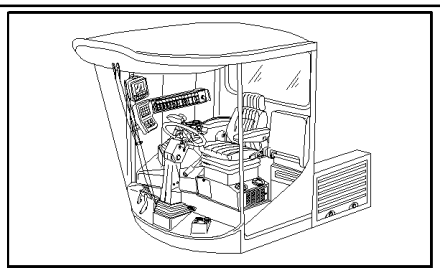

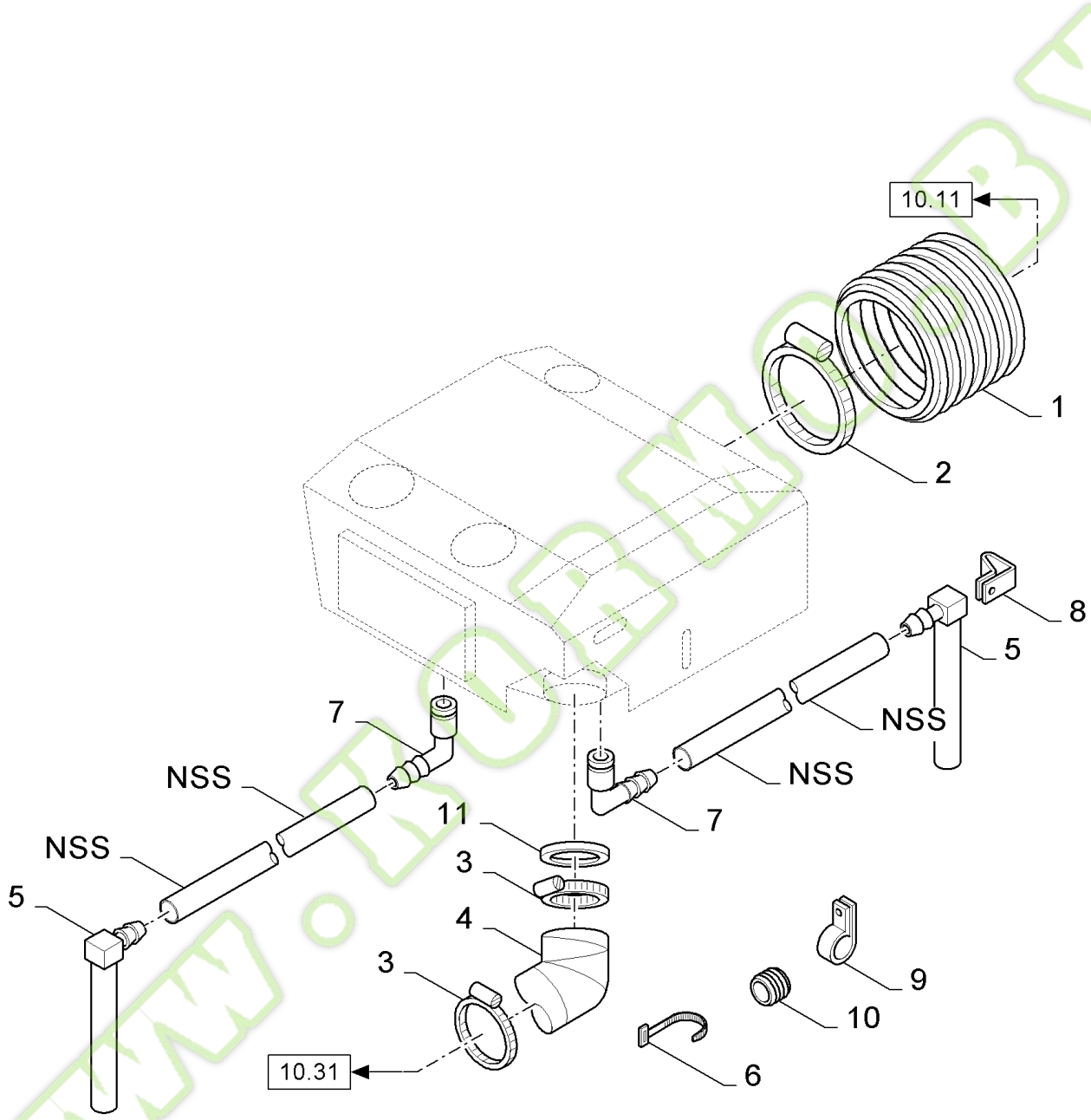

www.tormoby

FX50 SELF-PROPELLED FORAGE HARVESTER (10/02-)

10.17(01) AIR CONDITIONER

Ref	Part Number	Qty	Description
1	9819551	1	HOSE, {PP:89819551}
2	84011664	2	CLAMP,
3	381144	2	CLAMP, {PP:80381144}
4	84400210	1	HOSE,
5	9833900	2	TUBE, {PP:89833900}
6	323597	AR	STRAP, {PP:80323597}
7	9850816	2	ELBOW, {PP:89850816}
8	9513271	AR	CLAMP, {PP:89513271}
9	711051	AR	CLAMP, {PP:80711051}
10	102043	2	GROMMET, {PP:80102043}
11	84400209	1	COLLAR,

www.KOBMO.BY

10.18(01) HEATING

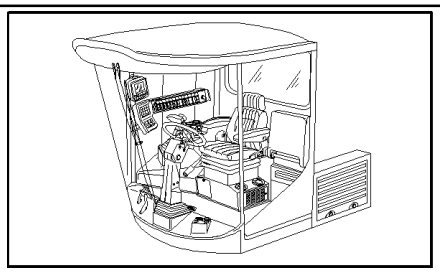

00.32.03
ENGINE
ENGINE
13.59B
17

1 2 3 4 5 6 7 8 9 10 11 12 13 14 15 16 16 18 19 19 20 21 22 23 24 24 24 24 24 24 25 25 26 27 28 29 30

www.BORMO.BY

FX50 SELF-PROPELLED FORAGE HARVESTER (10/02-)

10.18(01) HEATING

Ref	Part Number	Qty	Description
1	220104	1	RING, {PP:80220104}
2	80433257	1	CONNECTOR, HYD.,
3	103198	1	ELBOW, {PP:80103198}
4	84021074	4	TUBE,
5	326082	2	CLAMP, {PP:80326082}
6	84607087	2	CLAMP,
7	84607508	2	CONNECTOR, HYD., FEMALE
8	9706921	4	CLAMP, {PP:89706921}
9	84021075	2	TUBE,
10	511955	2	REDUCER, {PP:80511955}
11	84057136	2	CONNECTION, 3 WAY,
12	9513271	6	CLAMP, {PP:89513271}
13	323597	AR	STRAP, {PP:80323597}
14	9850811	1	KNOB, {PP:89850811}
15	271485	1	NUT, {PP:80271485} 7/16"
16	398561	1	CLIP, {PP:80398561}
17	9837974	1	CABLE, {PP:89837974} (16,26 to 28)
18	9832336	1	VALVE, {PP:89832336}
19	84045523	1	CONNECTOR, HYD.,
20	9835205	2	ELBOW, {PP:89835205}
21	84039021	1	RADIATOR,
22	322358	3	WASHER, LOCK, {PP:80322358} Belleville, M8,
23	80300806	3	SCREW, M5x10
24	84052958	AR	HOSE, L=5610MM
25	84058174	2	HOSE, L=1100MM
26	84058994	1	CABLE,
27	84058995	1	CONTROL,
28	84058996	1	SPIDER,
29	80412357	1	SCREW, M6x25
30	322357	1	WASHER, LOCK, {PP:80322357} Belleville, M6, Belleville, M6

www.KORMO.BY

10.19(01) AIR CONDITIONER

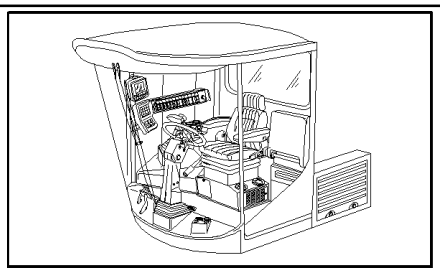

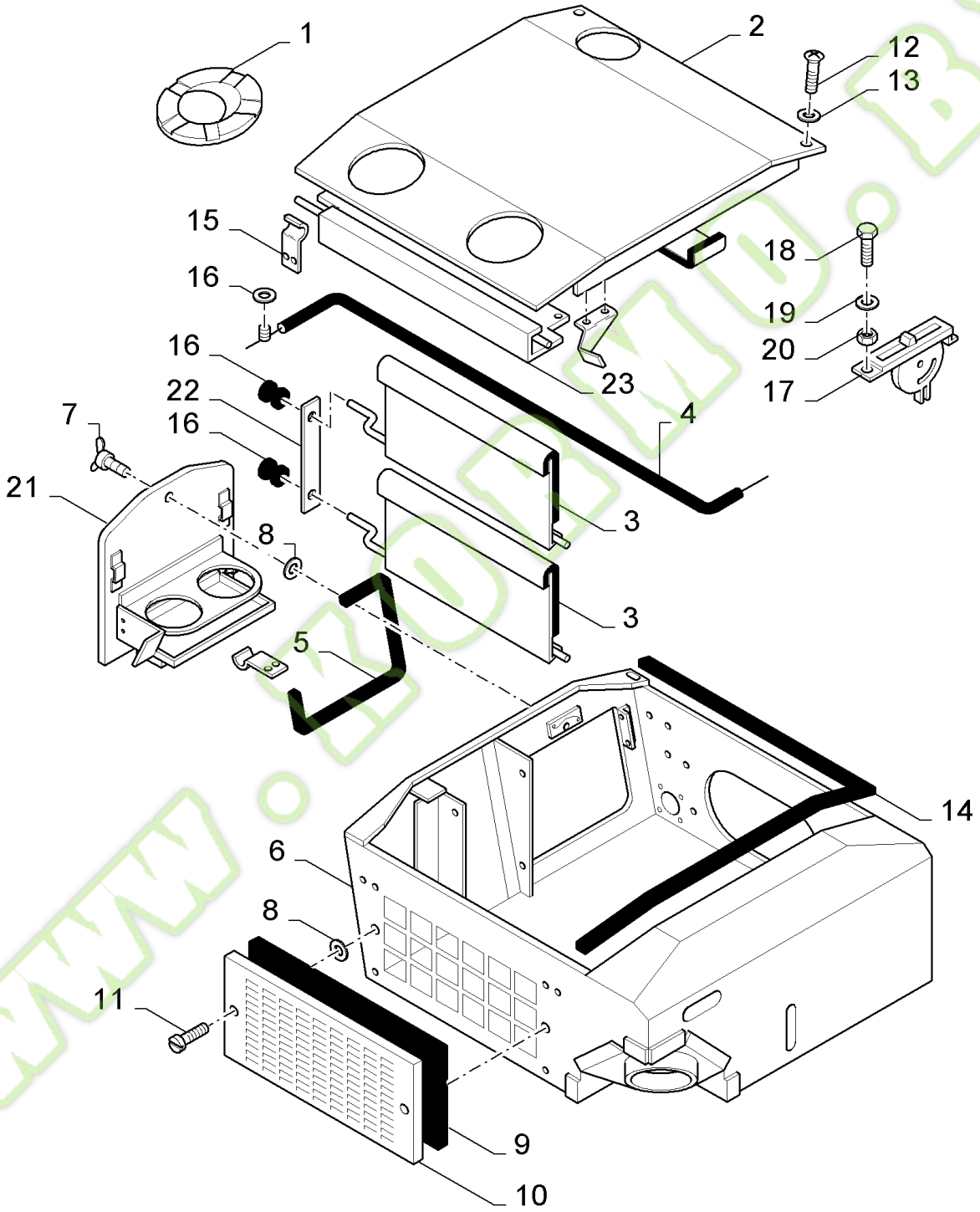

FX50 SELF-PROPELLED FORAGE HARVESTER (10/02-)

10.19(01) AIR CONDITIONER

Ref	Part Number	Qty	Description
1	84015380	3	PIPE, VENTILATION,
2	84043996	1	COVER,
3	84043997	1	COVER, Upper
3	84043998	1	COVER, Lower
4	84015385	1	CABLE,
5	84015382	1	ELEMENT, SEALING,
6	84043995	1	ENVELOPE,
7	84015391	1	SCREW,
8	84015390	3	RING, LOCKING,
9	84045002	1	FILTER, ELEMENT,
10	84043999	1	GRILLE,
11	84015389	2	SCREW,
12	62320	2	SCREW, {PP:80062320} M10x25
13	378244	2	WASHER, LOCK, {PP:80378244} 10MM
14	84045003	1	ELEMENT, SEALING,
15	84015376	2	BRACKET,
16	426735	1	RING, LOCKING, {PP:80426735}
17	9833562	1	CONTROL, {PP:89833562}
18	412475	1	SCREW, {PP:80412475} M4x16
19	322355	1	WASHER, LOCK, {PP:80322355} Belleville, M4, 4MM
20	100012	1	NUT, {PP:80100012} M4, Cl 8, M4
21	84032083	1	DOOR,
22	84045001	1	PLATE, COVER,
23	84068439	1	PLATE,

www.KOBMO.BY

10.20(01) AIR CONDITIONER

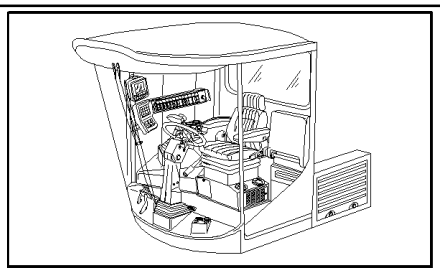

23
22
19
18
1
20
21
NSS
16
7
16
2
10
06.04
9
9
5
3
6
4
26
25
24
8
12
13
16
17
14
15
11
10.21

WWW.ROBIG.BY

ALL PARTS WITHOUT NO. ARE NOT AVAILABLE

FX50 SELF-PROPELLED FORAGE HARVESTER (10/02-)

10.20(01) AIR CONDITIONER

Ref	Part Number	Qty	Description
1	84015393	1	CONTROL,
2	84015375	1	LEVER,
3	84045745	1	ENVELOPE,
4	84045746	1	BLOWER,
5	84045748	1	RESISTOR,
6	84045747	1	HARNESS, WIRE,
7	84015394	1	CABLE,
8	84037990	1	THERMOSTAT,
9	84015384	2	SWITCH, ASSY,
10	84015388	2	CLIP,
11	84015397	1	VALVE, HYDRAULIC,
12	84817009	1	O-RING,
13	84015398	1	O-RING,
14	80120102	2	SCREW, M6x40
15	140015	2	WASHER, {PP:80140015} 6MM
16	426735	3	RING, LOCKING, {PP:80426735}
17	84038330	1	EVAPORATOR,
18	9833562	1	CONTROL, {PP:89833562} (NSS)
19	412475	1	SCREW, {PP:80412475} M4x16
20	322355	1	WASHER, LOCK, {PP:80322355} Belleville, M4, 4MM
21	100012	1	NUT, {PP:80100012} M4, Cl 8, M4
22	271485	1	NUT, {PP:80271485} 7/16"
23	9832337	1	KNOB, {PP:89832337}
24	84042749	1	BRACKET,
25	412188	2	SCREW, {PP:80412188} Phil Flat Hd, M5 x 12, 4.8,
26	322356	2	WASHER, LOCK, {PP:80322356}

www.KOBMO.BY

ALL PARTS WITHOUT NO. ARE NOT AVAILABLE

10.21(01) AIR CONDITIONER

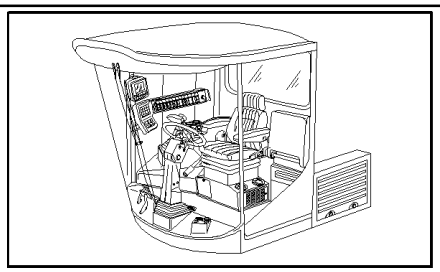

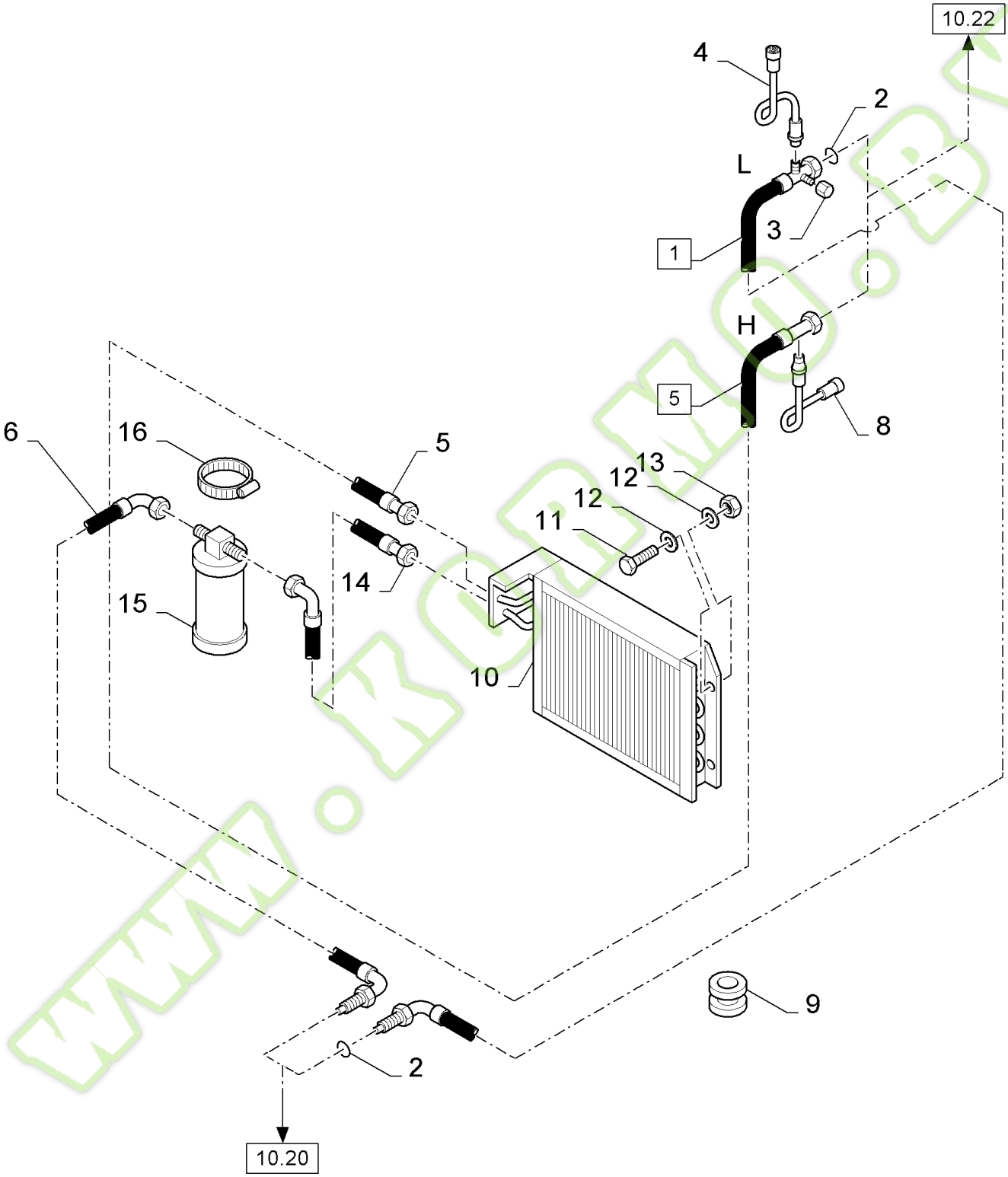

www.KOMO.BY

FX50 SELF-PROPELLED FORAGE HARVESTER (10/02-)

10.21(01) AIR CONDITIONER

Ref	Part Number	Qty	Description
1	84814271	1	HOSE, FLEXIBLE, , FOR FX30-40-50 ONLY, BSN C305
1	89850871	1	HOSE, FLEXIBLE, , FOR FX30-40-50 ONLY, ASN D306
1	84053964	1	HOSE, FLEXIBLE, (2,3), FOR FX60 ONLY
2	89827059	2	O-RING,
3	9843388	1	DUST CAP, {PP:89843388}
4	84056421	1	SWITCH, Low
5	84444547	1	HOSE, , FOR FX30-40-50 ONLY, BSN C305
5	84819616	1	HOSE, , FOR FX30-40-50 ONLY, ASN D306
5	84444387	1	HOSE, , FOR FX60 ONLY
6	84400803	1	HOSE, FLEXIBLE, Male/Male
6	89850872	1	HOSE, FLEXIBLE, Male/Female
8	84056420	1	SWITCH, High
9	102043	4	GROMMET, {PP:80102043}
10	84007881	1	CONDENSER,
11	120109	AR	SCREW, {PP:80120109} Hex, M10 x 20, 8.8, Full Thd, M10x20
12	140045	AR	WASHER, LOCK, {PP:80140045} Belleville, M10, 10MM
13	100016	AR	NUT, {PP:80100016} M10, Cl 8, M10
14	84814638	1	HOSE, FLEXIBLE,
14	89850873	1	HOSE, FLEXIBLE, , FOR FX60 ONLY
15	84058791	1	RECEIVER-DRYER, Male/Female, FOR FX30-40-50 ONLY
15	84078487	1	RECEIVER-DRYER, Male/Female, FOR SCANDINAVIE ONLY
15	9832539	1	RECEIVER-DRYER, {PP:89832539} Male/Male, FOR FX60 ONLY
16	381144	1	CLAMP, {PP:80381144}

www.KOMO.BY

10.22A(01) AIR CONDITIONER - D306

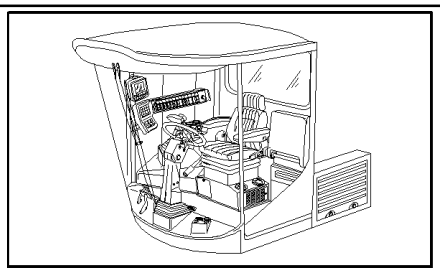

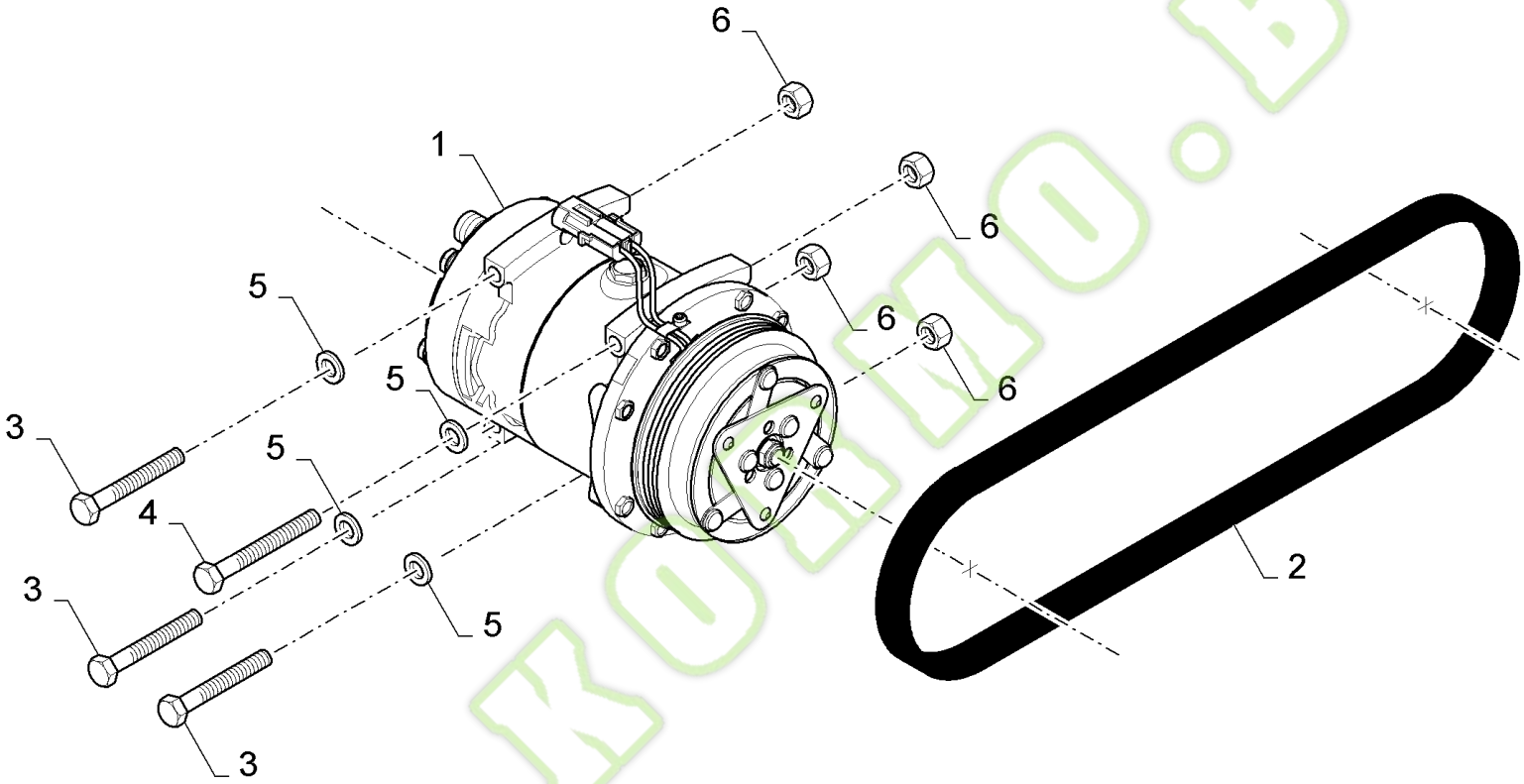

www.KOMO.BY

10.22A(01) AIR CONDITIONER - D306

Ref	Part Number	Qty	Description
1	84448669	1	COMPRESSOR, AIRCOND.,
2	84818008	1	BELT, TRANSMISSION,
3	84807920	3	SCREW, Hex, M8 x 110, 8.8, Full Thd, M8x110
4	84022180	1	BOLT, Hex, M8 x 130, 8.8, Full Thd, M8x130
5	322358	AR	WASHER, LOCK, {PP:80322358} Belleville, M8, 8MM
6	84807915	1	BUSHING,

www.KOBMO.BY

10.23(01) ARMREST, RH

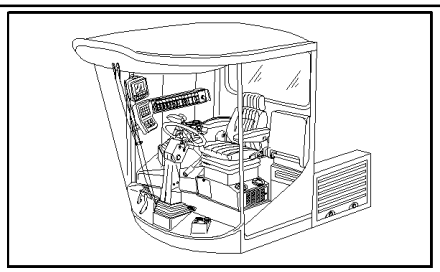

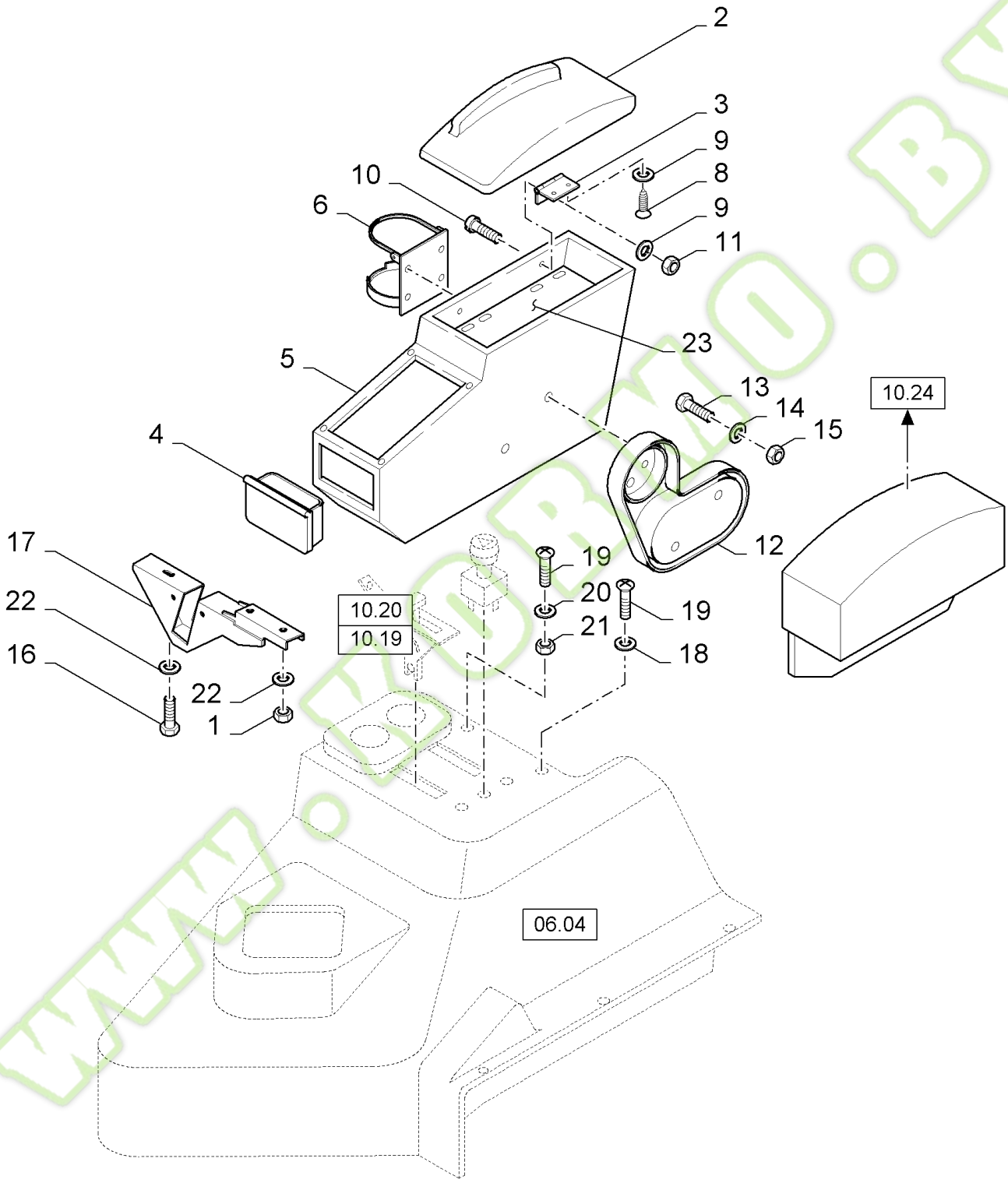

www.kubmo.by

FX50 SELF-PROPELLED FORAGE HARVESTER (10/02-)

10.23(01) ARMREST, RH

Ref	Part Number	Qty	Description
1	89706690	3	NUT, CL 8, M8 x 1.25 x 13.0
2	9831167	1	ARMREST, {PP:89831167}
3	9831042	2	HINGE, {PP:89831042}
4	89990474	1	ASH TRAY,
5	9831404	1	CASE, {PP:89831404}
6	9819041	1	CLAMP, {PP:89819041}
7	9831564	1	SOFT TRIM, {PP:89831564}
8	412684	4	SCREW, {PP:80412684}
9	322357	6	WASHER, LOCK, {PP:80322357} Belleville, M6, Belleville, M6
10	412491	2	SCREW, {PP:80412491} M6x16
11	9706755	2	NUT, {PP:89706755} M6, Cl 8, M6
12	9831401	1	COVER, {PP:89831401}
13	43138	2	SCREW, {PP:80043138} Hex, M10 x 20, 8.8, Full Thd, M10x20
14	140045	2	WASHER, LOCK, {PP:80140045} Belleville, M10,
15	100016	2	NUT, {PP:80100016} M10, Cl 8, M10
17	9831402	1	SUPPORT, {PP:89831402}
18	448889	2	WASHER, {PP:80448889}
19	412475	4	SCREW, {PP:80412475} M4x16
20	322355	2	WASHER, LOCK, {PP:80322355} Belleville, M4,
21	100012	2	NUT, {PP:80100012} M4, Cl 8, M4
22	322358	3	WASHER, LOCK, {PP:80322358} Belleville, M8,
23	84001403	1	PLATE,
16	16043224	1	SCREW, Hex, M8 x 16, 8.8, Full Thd, M8x16

www.KORMO.BY

10.24(01) SEAT

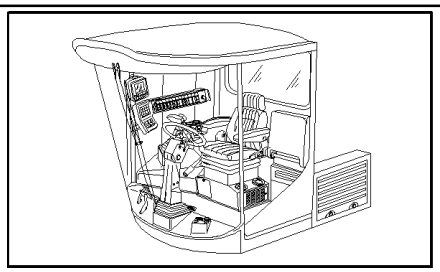

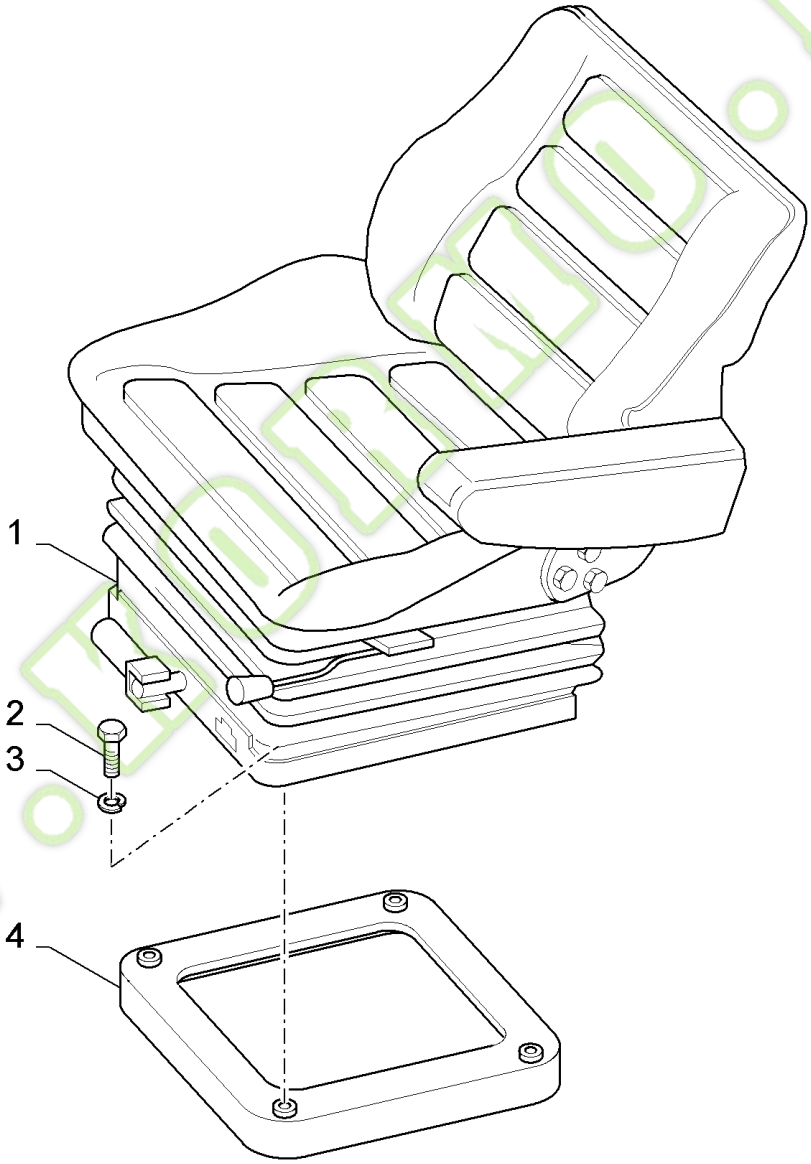

www.DEMO.BY

10.24(01) SEAT

Ref	Part Number	Qty	Description
1	84019911	1	SEAT, DRIVER, , STANDARD SEAT, INCL. FIGS. 10.25 TO 10.28
1	84019910	1	SEAT, DRIVER, , AIR SUSPENDED SEAT, INCL. FIGS.10.25, 10.26 AND 10.29
2	120228	4	SCREW, {PP:80120228} Hex Soc Hd, M8 x 20, 8.8, M8x20
2	80120061	4	SCREW, M8x60
3	322358	4	WASHER, LOCK, {PP:80322358} Belleville, M8, 8MM
4	9594528	1	SUPPORT, {PP:89594528} Std

www.KOBMO.BY

10.25(01) SEAT

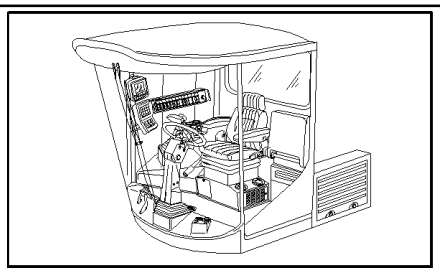

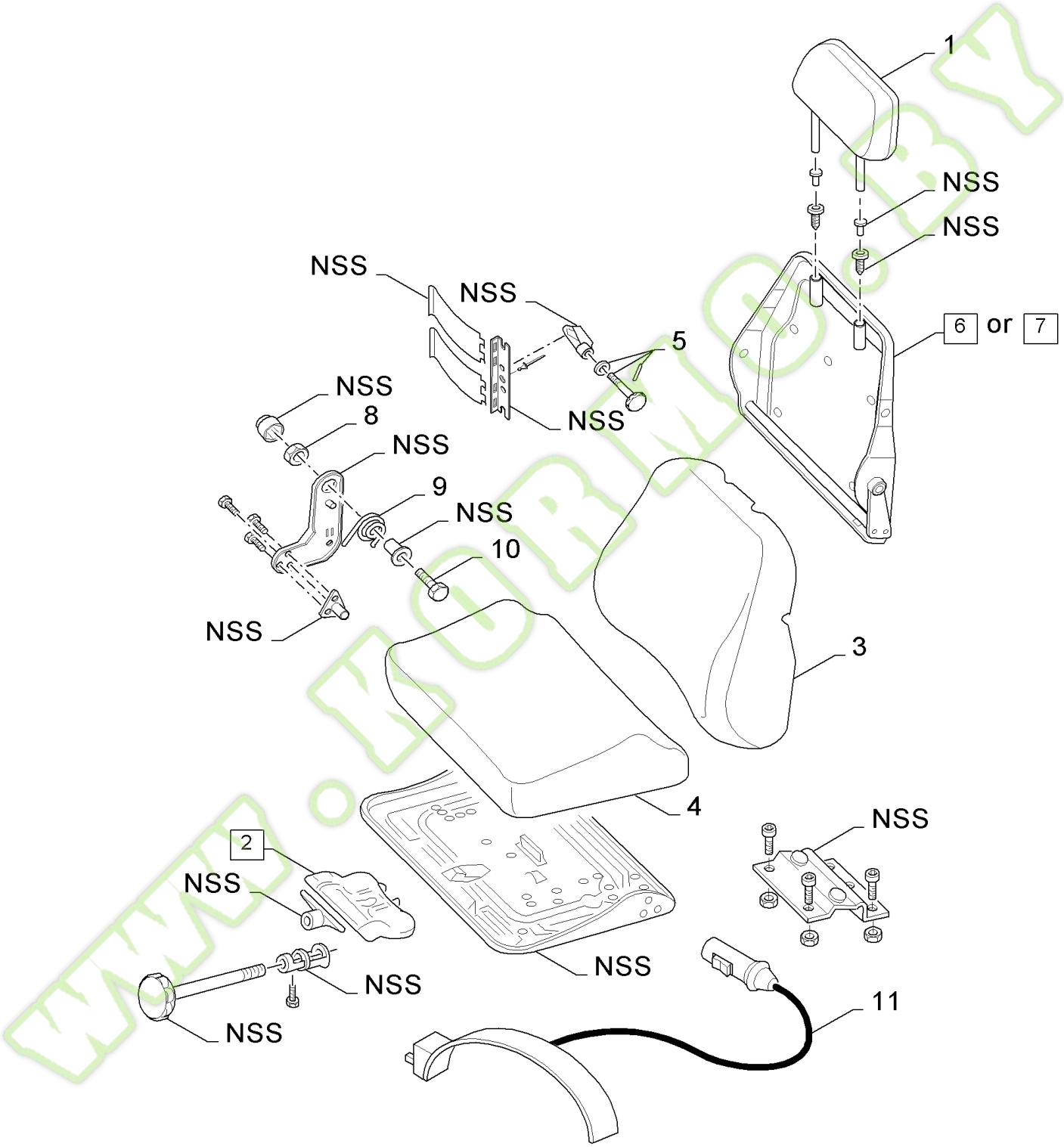
1
NSS
NSS
NSS
NSS
NSS
5
6 or 7
NSS
8
NSS
9
NSS
10
NSS
3
4
NSS
2
NSS
NSS
NSS
NSS
11

FX50 SELF-PROPELLED FORAGE HARVESTER (10/02-)

10.25(01) SEAT

Ref	Part Number	Qty	Description
1	84021181	1	HEADREST, SEAT, , AIR SUSPENDED SEAT
2	84021182	1	PAD, ADJUSTING,
3	84021184	1	CUSHION, SEAT, , AIR SUSPENDED SEAT
3	84026495	1	CUSHION, SEAT, , STANDARD SEAT
4	84026496	1	CUSHION, SEAT, , STANDARD SEAT
4	84026497	1	CUSHION, SEAT, , AIR SUSPENDED SEAT
5	84021188	1	SCREW,
6	84021187	1	SUPPORT, , STANDARD SEAT
7	84021189	1	SUPPORT, (6), AIR SUSPENDED SEAT
8	100067	1	NUT, {PP:80100067} M8 x 1.25", Cl 8, M8
9	84021190	1	SPRING,
10	300381	1	SCREW, {PP:80300381} Hex, M8 x 35, 8.8, M8x35
11	84026499	1	SWITCH,

WWW.KOBMO.BY

10.26(01) SEAT

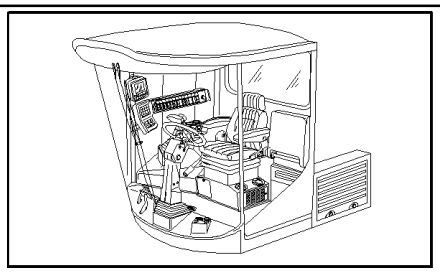

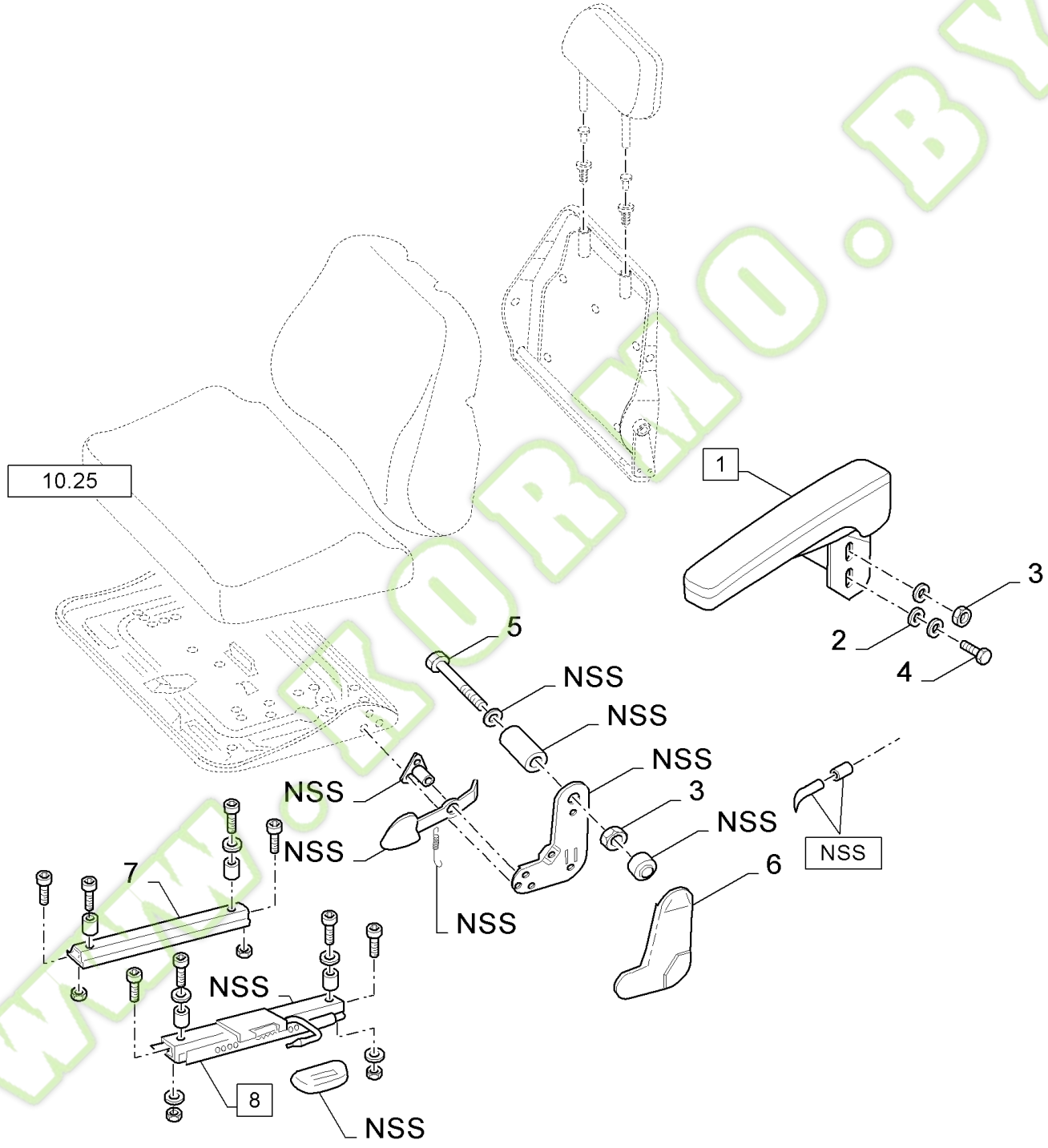

www.30BMO.BY

10.26(01) SEAT

Ref	Part Number	Qty	Description
1	84017114	1	ARMREST, (2 to 4)
2	412228	3	WASHER, {PP:80412228}
3	100067	2	NUT, {PP:80100067} M8 x 1.25", Cl 8, M8
5	300381	1	SCREW, {PP:80300381} Hex, M8 x 35, 8.8, M8x35
6	84005802	1	COVER,
7	84021191	1	PROFILE,
8	84021195	1	PROFILE,
4	16043224	1	SCREW, Hex, M8 x 16, 8.8, Full Thd, M8x16

WWW.KOBMO.BY

10.27(01) SEAT

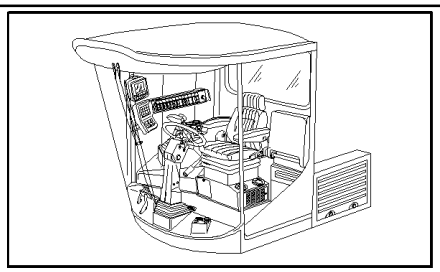

NSS
1
2
3
NSS
4
NSS
NSS
NSS
9
11
5
NSS
6
7
8
10
11
10.28

FOR STANDARD SEAT ONLY

FX50 SELF-PROPELLED FORAGE HARVESTER (10/02-)

10.27(01) SEAT

Ref	Part Number	Qty	Description
1	446927	2	PLATE, {PP:80446927}
2	84021192	1	BELLOWS, (1,3)
3	446914	22	PLUG, {PP:80446914}
4	84021193	1	ADJUSTER, (5 to 8)
5	446921	4	ROLLER, {PP:80446921}
6	446924	1	PLATE, {PP:80446924}
7	446922	2	PLATE, {PP:80446922}
8	446925	1	SHAFT, {PP:80446925}
9	84021196	4	DAMPER, (10,11)
10	412515	1	BOLT, {PP:80412515}
11	412516	2	CIRCLIP, {PP:80412516}

FOR STANDARD SEAT ONLY

www.KOBMO.BY

10.28(01) SEAT

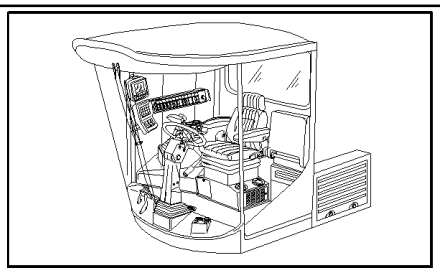

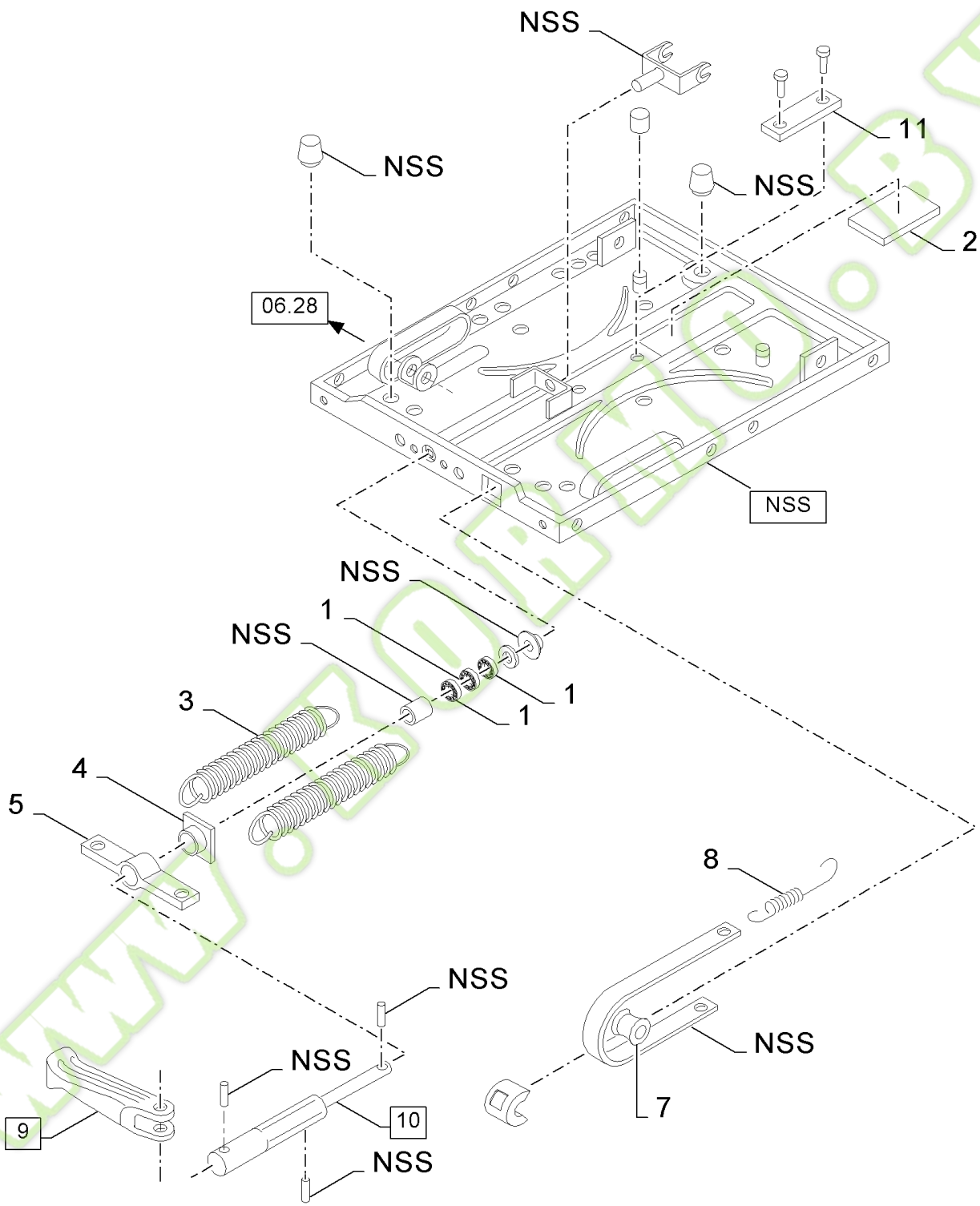

FOR STANDARD SEAT ONLY

FX50 SELF-PROPELLED FORAGE HARVESTER (10/02-)

10.28(01) SEAT

Ref	Part Number	Qty	Description
1	446943	1	BEARING ASSY, {PP:80446943}
2	446932	1	PLATE, {PP:80446932}
3	84021197	2	SPRING,
4	412520	1	COLLAR, {PP:80412520}
5	446942	1	BRACKET, {PP:80446942}
6	446935	1	CAP, {PP:80446935}
7	446936	1	ROLLER, {PP:80446936}
8	446937	1	SPRING, {PP:80446937}
9	84021198	1	HANDLE,
10	84021199	1	SCREW, (9)
11	446931	1	PLATE, {PP:80446931}

FOR STANDARD SEAT ONLY

WWW.KOBMO.BY

10.29(01) AIR SUSPENDED SEAT

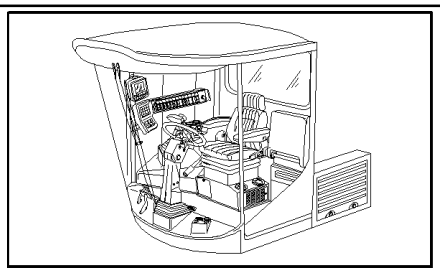

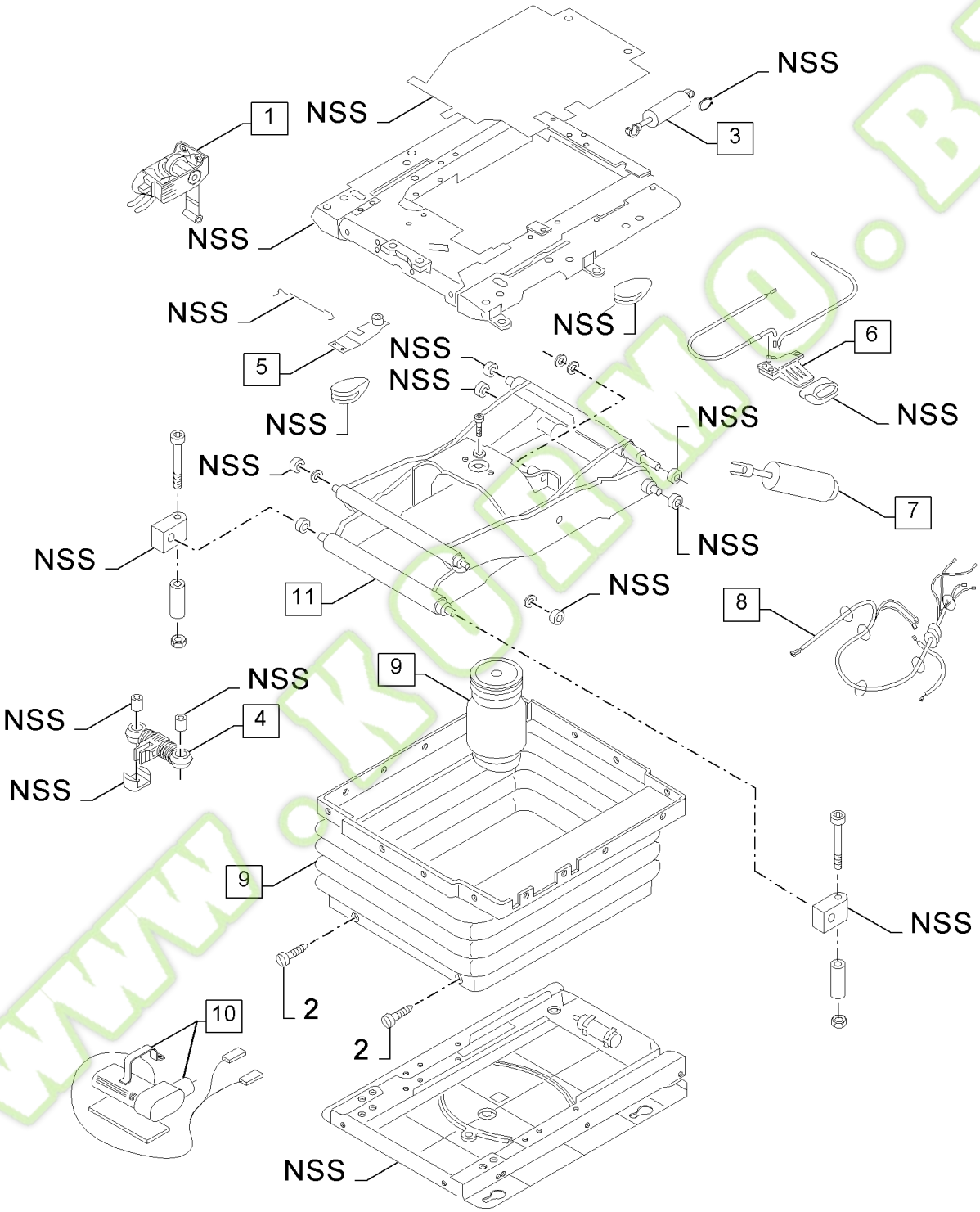

www.KOEMO.BY

FX50 SELF-PROPELLED FORAGE HARVESTER (10/02-)

10.29(01) AIR SUSPENDED SEAT

Ref	Part Number	Qty	Description
1	84021200	1	ADJUSTER,
2	446914	24	PLUG, {PP:80446914}
3	84021202	1	DAMPER, (2)
4	84021203	1	PLATE, (2)
5	84021204	1	PLATE,
6	84021205	1	ADJUSTER, (2)
7	84026498	1	DAMPER, (2)
8	84021208	1	CABLE,
9	84021209	1	COMPRESSOR, SPRING, (2)
10	84021210	1	COMPRESSOR, AIR, (2)
11	84021211	1	ADAPTER, (2)
12	84021212	1	BELLOWS, (2)

www.KOBMO.BY

10.30(01) BUDDY SEAT

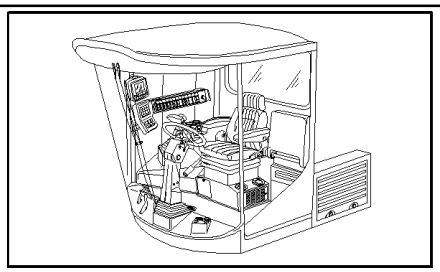

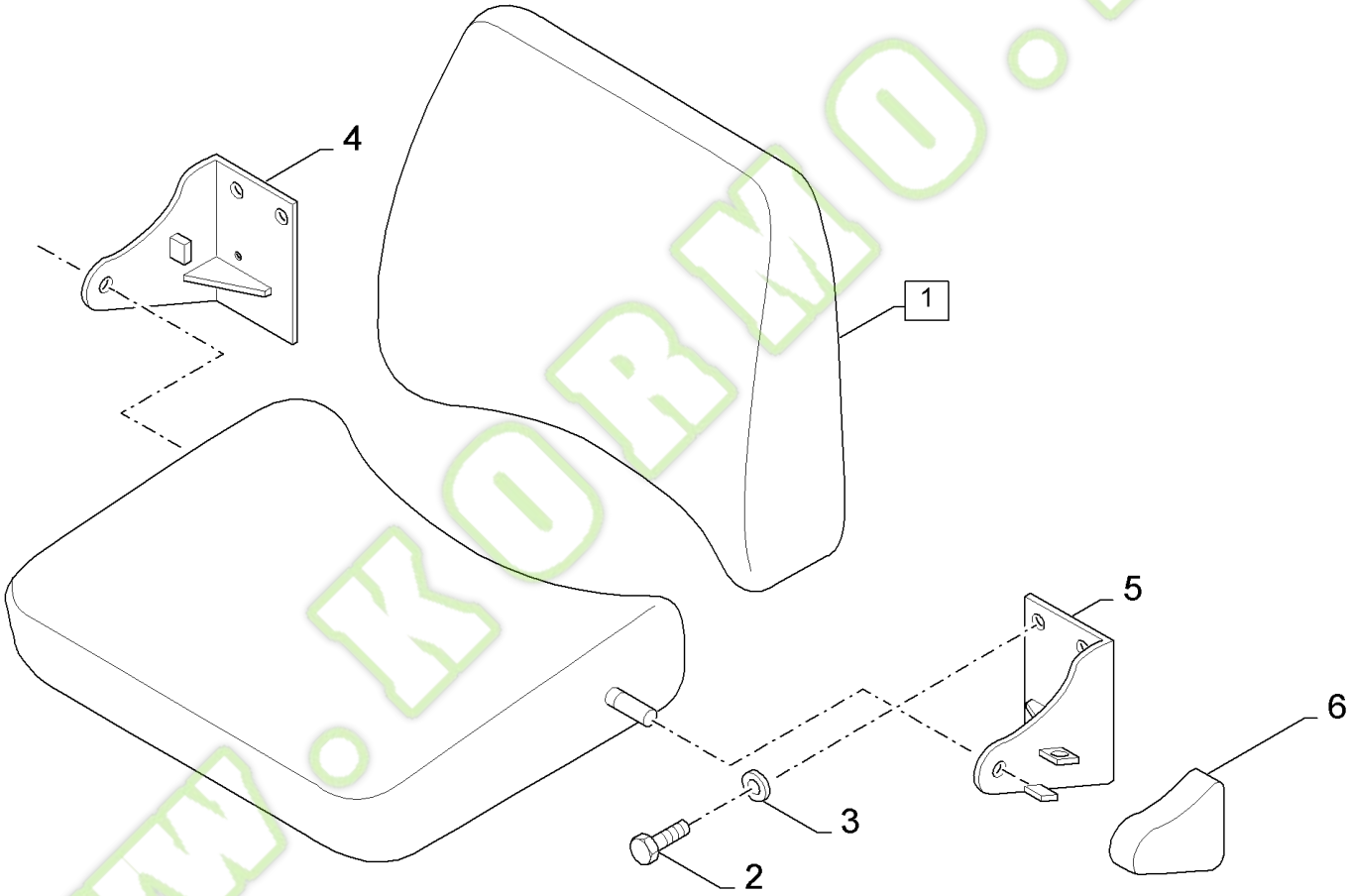

www.KOBMO.BY

FX50 SELF-PROPELLED FORAGE HARVESTER (10/02-)

10.30(01) BUDDY SEAT

Ref	Part Number	Qty	Description
1	84015303	1	SEAT, PASSENGER,
2	43127	4	BOLT, {PP:80043127} Hex, M8 x 25, 8.8, Cap, HH, CL 8.8, M8 x 1.25 x 25
3	322358	4	WASHER, LOCK, {PP:80322358} Belleville, M8, 8MM
4	84037866	1	PLATE, RH
5	84037867	1	PLATE, LH
6	84037868	1	COVER,

WWW.KOBMO.BY

10.31(01) FILTER

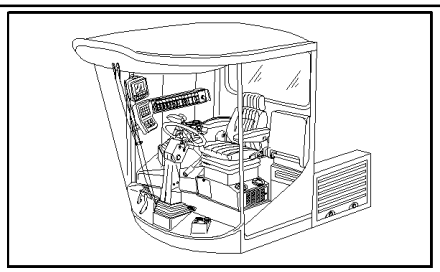

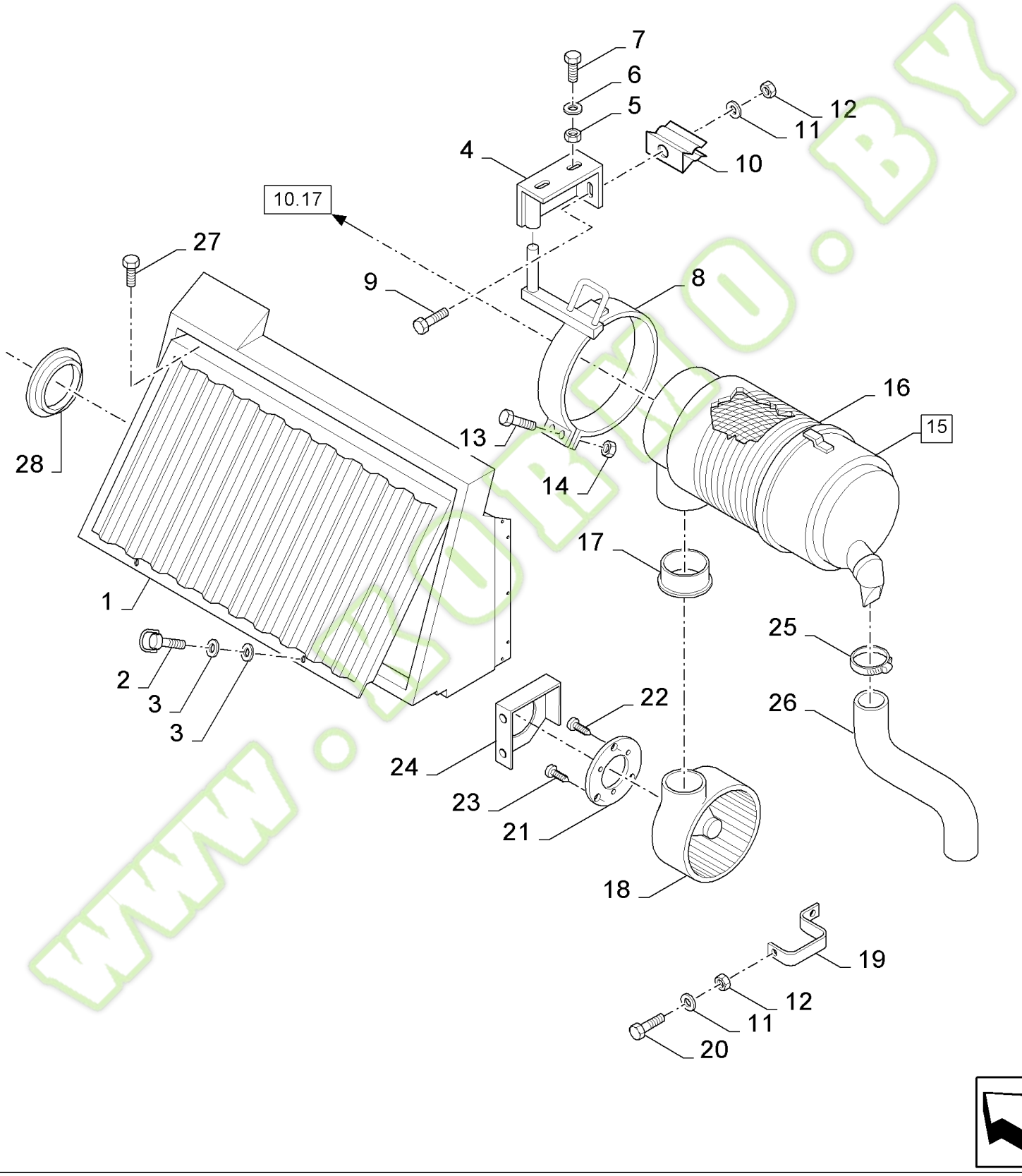

FX50 SELF-PROPELLED FORAGE HARVESTER (10/02-)

10.31(01) FILTER

Ref	Part Number	Qty	Description
1	84400206	1	PANEL, BOXED,
2	89819681	2	TAB, LOCKING,
3	84000656	4	RING,
4	84002840	1	SUPPORT,
5	89706690	2	NUT, CL 8, M8 x 1.25 x 13.0
6	322358	2	WASHER, LOCK, {PP:80322358} Belleville, M8, 8MM
7	86507486	2	BOLT (CARRIAGE), Short NK, M8 x 20, Cl8.8, Full Thd, M8x20
8	84002841	1	SUPPORT,
9	86511831	1	SCREW, Cross Pan Hd, M6 x 25, M6x25
10	84035664	1	CLIP,
11	412649	3	WASHER, LOCK, {PP:80412649} Belleville, M6, Belleville, M6
12	9706755	3	NUT, {PP:89706755} M6, Cl 8, M6
13	43128	2	SCREW, {PP:80043128} Hex, M8 x 30, 8.8, Cap, HH, CL 8.8, M8 x 1.25 x 30
14	86629542	2	NUT, M8 x 1.25", Cl 8, M8
15	84036675	1	FILTER, (16)
16	84036676	1	FILTER, ELEMENT,
17	84002842	1	RING,
18	84056300	1	BLOWER,
19	84045782	1	CLAMP,
20	86508568	2	SCREW, Hex, M6 x 16, 8.8, M6x16
21	84446072	1	RING,
22	84043238	4	SCREW,
23	84043237	3	SCREW,
24	84002837	1	SUPPORT,
25	360747	1	CLAMP, {PP:80360747}
26	84039471	1	HOSE,
27	331233	2	PLUG, {PP:80331233}
28	84045349	1	PLUG,

www.KOBMO.BY

10.32(01) CAB NOISE-INSULATION

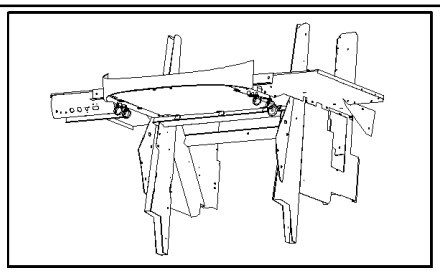

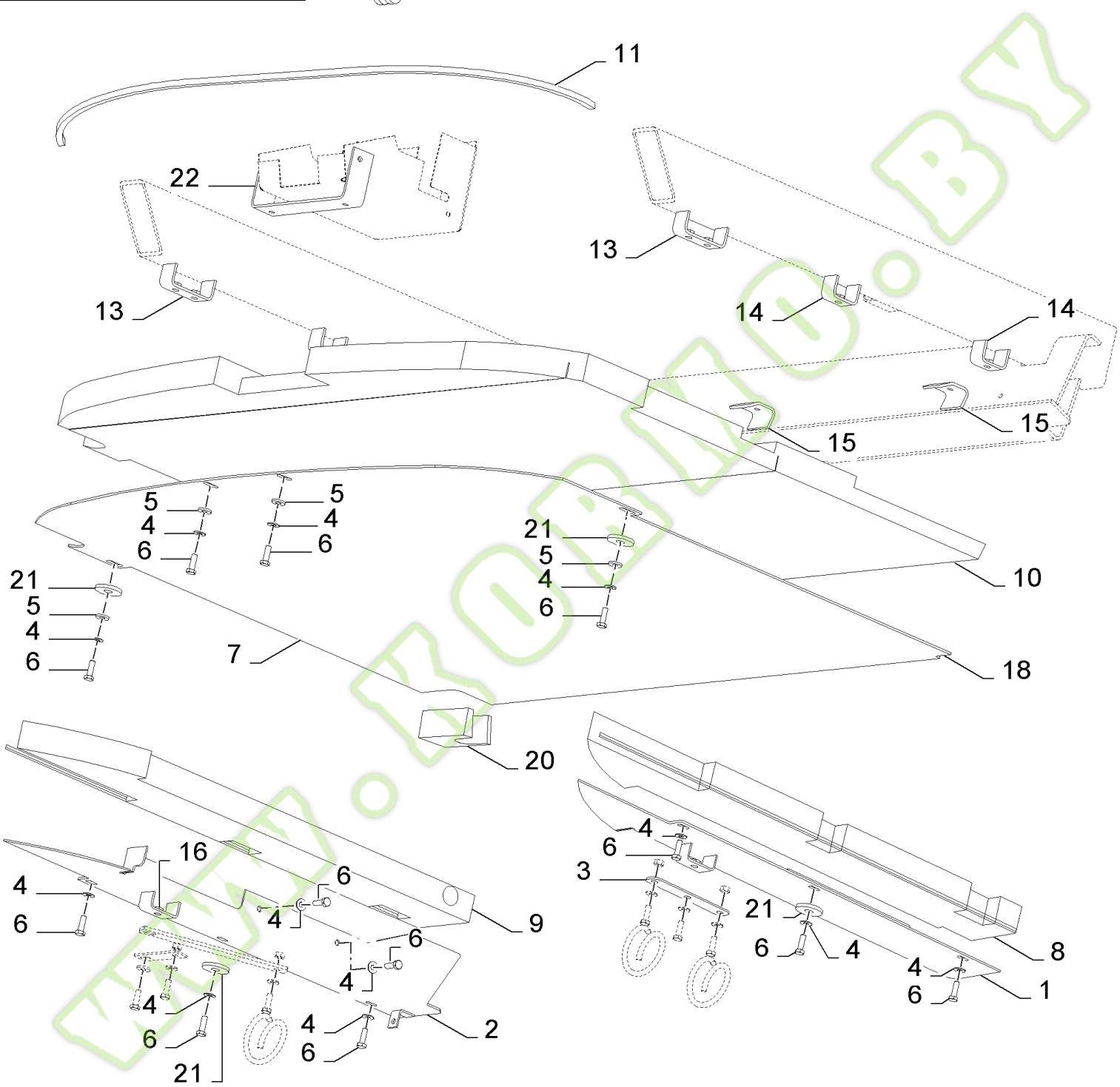

WWW.KOBIO.BY

FX50 SELF-PROPELLED FORAGE HARVESTER (10/02-)

10.32(01) CAB NOISE-INSULATION

Ref	Part Number	Qty	Description
1	84444728	1	PLATE,
2	84444730	1	PLATE,
3	84444726	1	PLATE,
4	322358	14	WASHER, LOCK, {PP:80322358} Belleville, M8, 8MM
5	412328	4	WASHER, {PP:80412328} 8MM
6	43128	14	SCREW, {PP:80043128} Hex, M8 x 30, 8.8, M8x30
7	84448220	1	PLATE,
8	84444708	1	ISOLATOR,
9	84444709	1	ISOLATOR,
10	84448217	1	ISOLATOR,
11	84444747	1	PROTECTION,
13	84444661	2	SUPPORT,
14	84444651	4	SUPPORT,
15	84448174	3	PLATE,
16	336256	8	NUT, {PP:80336256} M8, Cl 8, M8
17	102043	1	GROMMET, {PP:80102043}
18	80401310	AR	PROFILE,
20	84447018	1	ISOLATOR,
21	327084	2	WASHER, {PP:80327084}
22	84448181	1	SUPPORT,

www.KOBMO.BY

WHEELS	**ROUES**	**RUEDAS**	**HJUL**
RUOTI	**RÄDER**	**RODAS**	**WIELEN**

SEC. 11

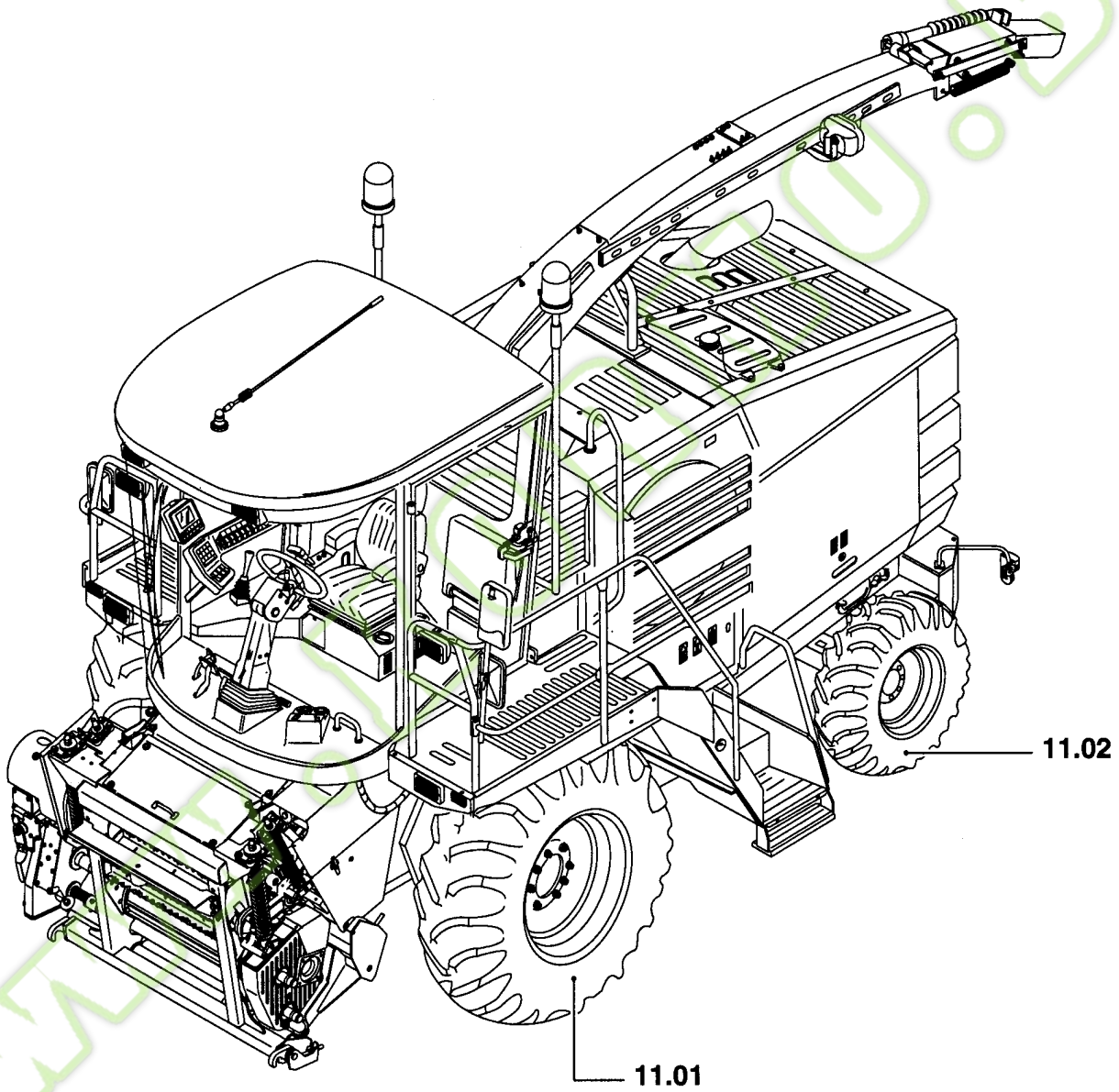

11.000(01) SECTION LIST 11

Ref	Part Number	Qty	Description

www.KORMO.BY

11.01(01) TRACTION WHEELS

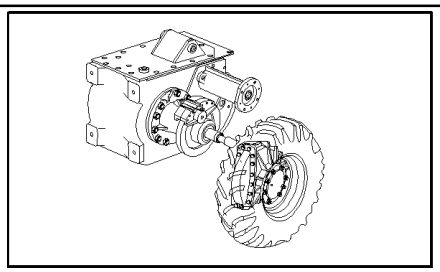

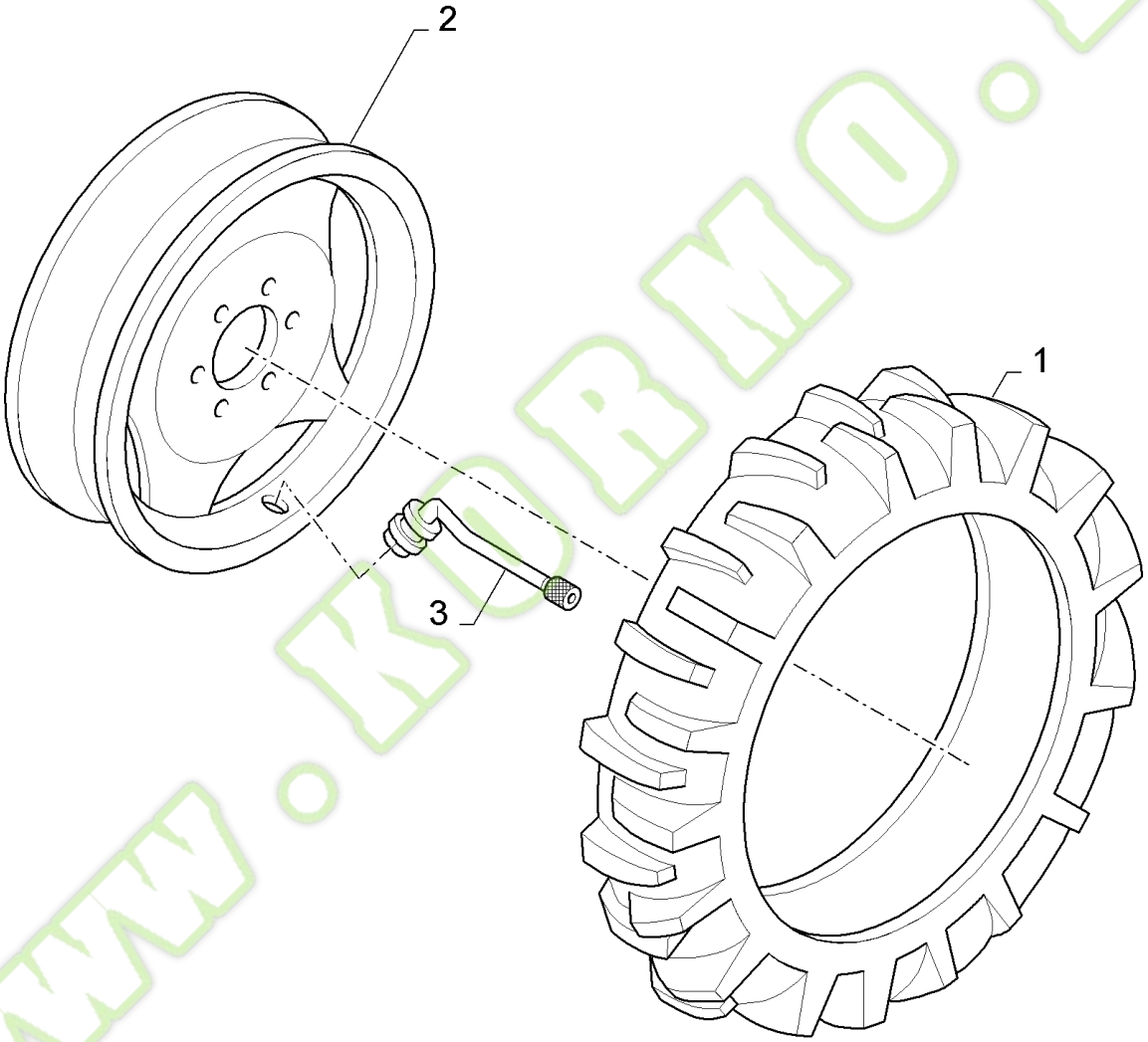

www.KOBMO.BY

FX50 SELF-PROPELLED FORAGE HARVESTER (10/02-)

11.01(01) TRACTION WHEELS

Ref	Part Number	Qty	Description
1	84032268	2	TYRE/TIRE, , FOR FX30 ONLY, 750/65R26 - 166A8 - DT820
1	84078790	2	TYRE/TIRE, , 800/65 R32 - 172A8 - DT822
1	9818259	2	TYRE/TIRE, {PP:89818259} , NOT FOR NA, ONLY WITH 4-WHEEL DRIVE, 620/75R30 - 163A8 - DT822
1	84806566	2	TYRE/TIRE, , 800/65 R32 - 172A8 - XM28
1	84100135	2	TYRE/TIRE, , NOT FOR NA, 1050/50R32 - 178A8
1	84068189	2	TYRE/TIRE, , 650/75R32 - 172A8
1	84453816	2	TYRE/TIRE, , 900/55 R32 - 173A8
2	84429227	2	RIM, , DH36x32, NOT FOR NA
2	84429206	2	RIM, , D25Ax26, FOR FX30 ONLY, ONLY WITH 2-WHEEL DRIVE
2	84429222	2	RIM, , DWW25Ax32
2	84429209	2	RIM, , DW20Ax30, NOT FOR NA, ONLY WITH 4-WHEEL DRIVE
2	84429210	2	RIM, , 21Ax32
2	84429205	2	RIM, DWW27Ax32
3	397236	2	VALVE, PNEUMATIC, {PP:80397236} , BSN C373
3	84460168	2	VALVE, HYDRAULIC, , ASN D374

www.KOBMO.BY

11.02(01) STEERING WHEELS

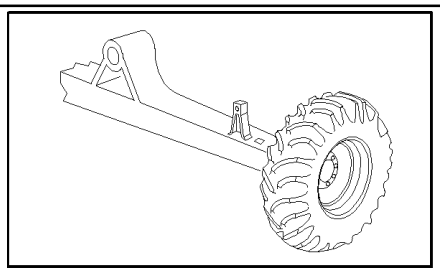

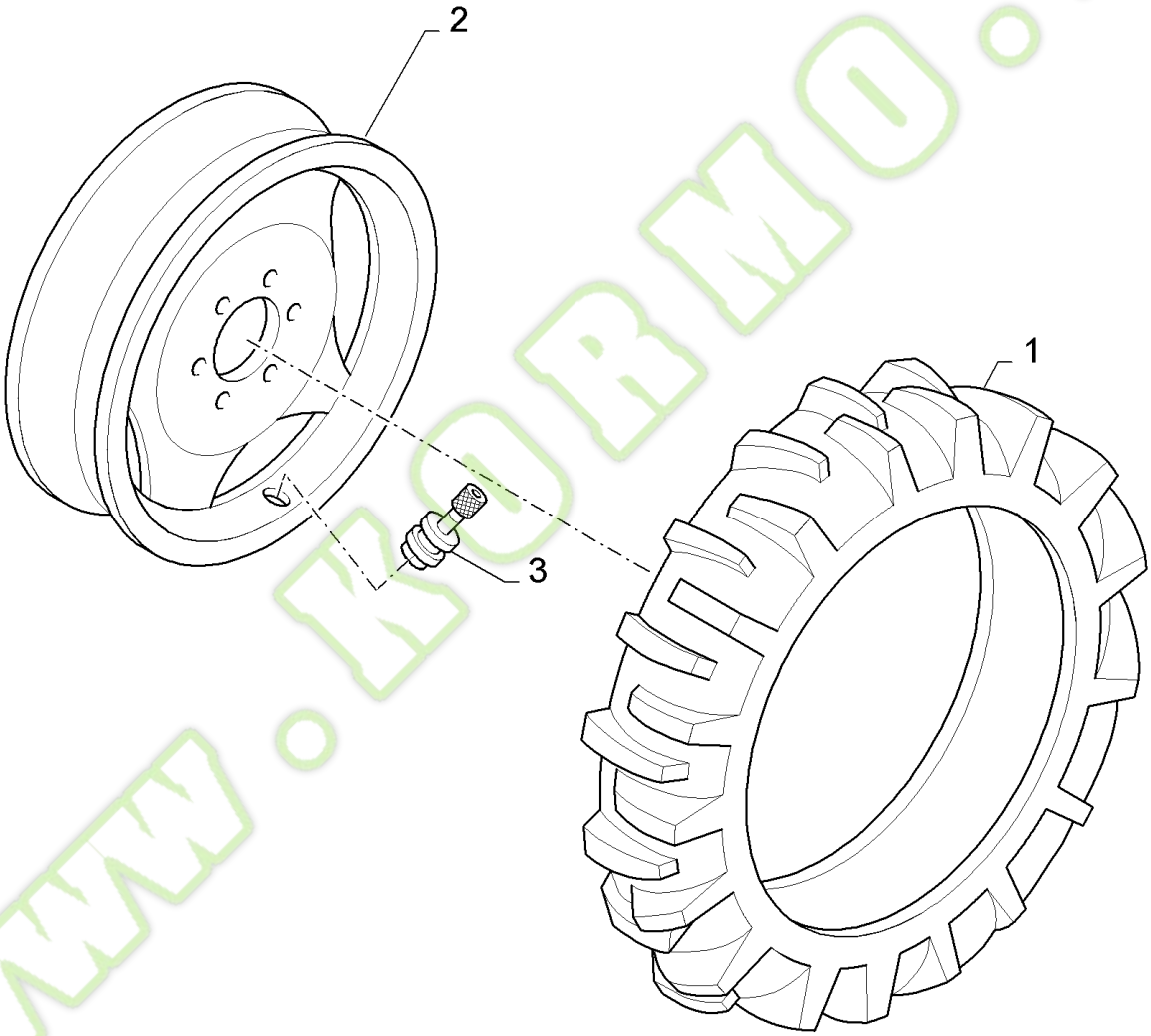

www.KOBMO.BY

FX50 SELF-PROPELLED FORAGE HARVESTER (10/02-)

11.02(01) STEERING WHEELS

Ref	Part Number	Qty	Description
1	445960	2	TYRE/TIRE, {PP:80445960} , FOR FX30 ONLY, 16.0X70X20 - 10PR
1	9514625	2	TYRE/TIRE, {PP:89514625} , 460/70R24 - 150A8
1	84801075	2	TYRE/TIRE, , 460/70R24 - 152A8
1	84078785	2	TYRE/TIRE, , 480/70R24-138A8-DT810
1	84806567	2	TYRE/TIRE, , 540/65R24-140A8
2	84429212	2	RIM, , 14X20, FOR FX30 ONLY, NOT FOR NA, ONLY WITH 2-WHEEL DRIVE
2	84429216	2	RIM, , W15LX24, ONLY WITH 4-WHEEL DRIVE
2	84429217	2	RIM, , W15LX24, ONLY WITH 2-WHEEL DRIVE
3	395448	2	VALVE, PNEUMATIC, {PP:80395448}

www.KOBMO.BY

MAIN FRAME	**CHÂSSIS PRINCIPAL**	**BASTIDOR PRINCIPAL**	**HOVEDRAMME**
TELAIO PRINCIPALE	**HAUPTGESTELL**	**ESTRUTURA PRINCIPAL**	**HOOFDRAAM**

SEC. 12

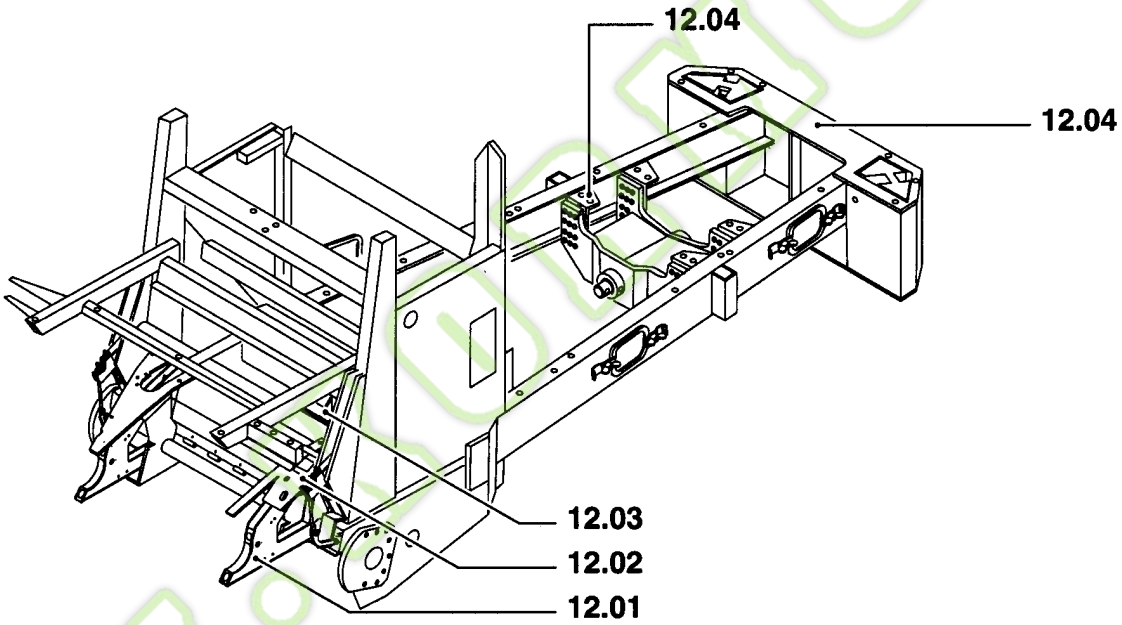

www.auto.by

Ref	Part Number	Qty	Description

www.KOBMO.BY

12.01(01) GRASS FRAME

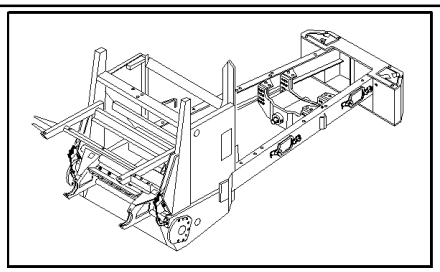

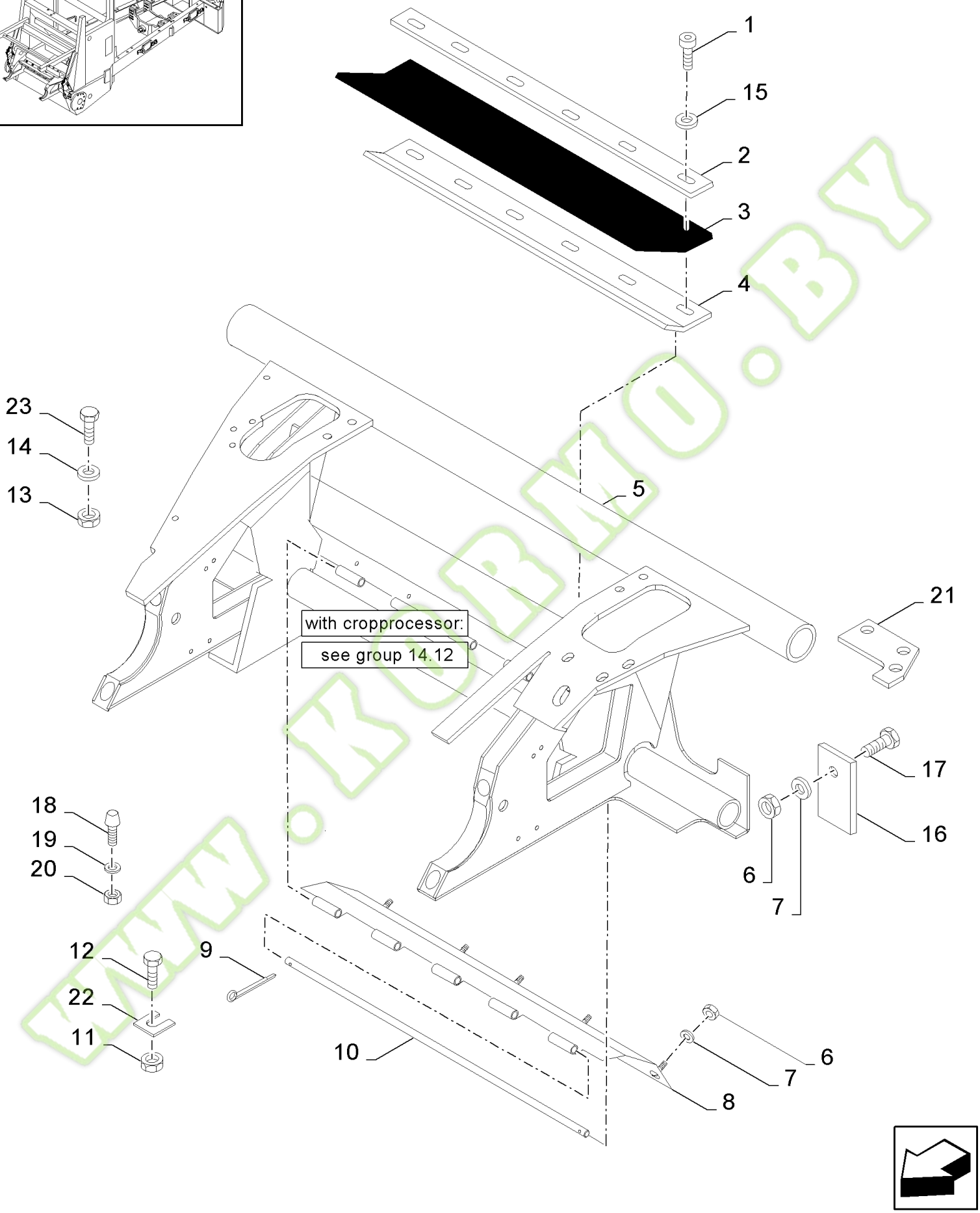

www.KOBMO.BY

FX50 SELF-PROPELLED FORAGE HARVESTER (10/02-)

12.01(01) GRASS FRAME

Ref	Part Number	Qty	Description
1	43128	6	SCREW, {PP:80043128} Hex, M8 x 30, 8.8, Cap, HH, CL 8.8, M8 x 1.25 x 30
2	84000356	1	PLATE, FIXING,
3	84000357	1	CANVAS,
3	84432292	1	CANVAS, , FOR NA ONLY OR FOR CROP PRO PLUS
4	84012252	1	PLATE, COVER,
4	84432299	1	PLATE, , FOR NA ONLY OR FOR CROP PRO PLUS
5	84439658	1	FRAME,
5	84989047	1	FRAME, , FOR NA ONLY OR FOR CROP PRO PLUS
6	89706690	5	NUT, CL 8, M8 x 1.25 x 13.0
7	322358	5	WASHER, LOCK, {PP:80322358} Belleville, M8, 8MM
8	84005175	1	COVER,
9	130006	2	PIN, SPLIT (COTTER), {PP:80130006} M4 x 20,
10	84005186	1	ROD,
11	140048	AR	WASHER, LOCK, {PP:80140048} Belleville, M16, 16MM
12	43168	2	SCREW, {PP:80043168} Hex, M16 x 40, 8.8, Hex, M16 x 40, 8.8
13	86000441	AR	NUT, M12 x 1.75, Cl 8,
14	333040	4	WASHER, {PP:80333040}
15	378243	6	WASHER, {PP:80378243} 8MM
16	84069989	1	PLATE, ADJUSTING,
18	190029	2	INSULATOR BLOCK, {PP:80190029}
19	140045	2	WASHER, LOCK, {PP:80140045} Belleville, M10, 10MM
20	100016	2	NUT, {PP:80100016} M10, Cl 8, M10
21	84432298	1	SHIM, , FOR NA ONLY OR FOR CROP PRO PLUS
22	84038752	AR	PLATE, ADJUSTING, THK.:0.5MM, FOR NA ONLY OR FOR CROP PRO PLUS
23	86508586	4	SCREW, Hex, M16 x 240, 8.8, M16x240, FOR NA ONLY OR FOR CROP PRO PLUS
17	16043224	1	SCREW, Hex, M8 x 16, 8.8, Full Thd, M8x16

www.KOMO.BY

12.02(01) MAIN FRAME

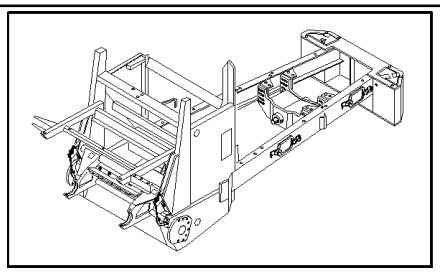

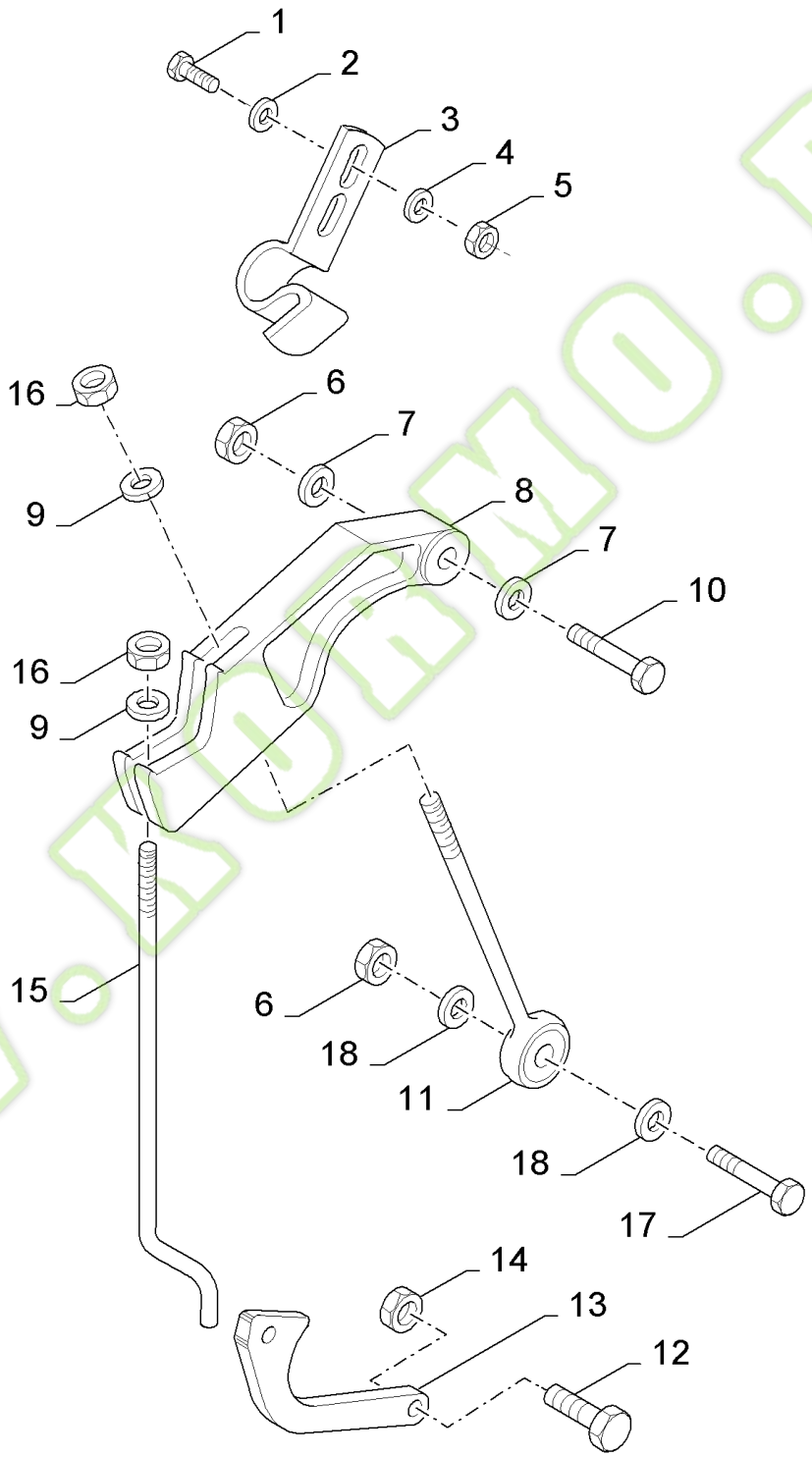

www.KOBMO.BY

FX50 SELF-PROPELLED FORAGE HARVESTER (10/02-)

12.02(01) MAIN FRAME

Ref	Part Number	Qty	Description
1	412255	4	SCREW, {PP:80412255} Hex, M4 x 20, 8.8, Full Thd, M4x20
2	84022857	2	WASHER,
3	9801069	2	LATCH, {PP:89801069}
4	322355	4	WASHER, LOCK, {PP:80322355} Belleville, M4, 4MM
5	100012	4	NUT, {PP:80100012} M4, Cl 8, M4
6	86000441	AR	NUT, M12 x 1.75, Cl 8, M16
7	393062	AR	WASHER, LOCK, {PP:80393062}
8	84000375	2	ARM,
9	394631	4	WASHER, {PP:80394631}
10	374889	2	SCREW, {PP:80374889} Hex, M16 x 100, 8.8, M16x100
11	84023279	2	BOLT, M16x200
12	43130	2	SCREW, {PP:80043130} Hex, M8 x 50, 8.8, M8x50
13	84001545	2	HOOK,
14	43442	2	NUT, {PP:80043442} M8 x 1.25", Cl 8, M8
15	84026014	2	TIE-ROD,
16	100020	4	NUT, {PP:80100020} M16, Cl 8, M16, Cl 8
17	350616	2	SCREW, {PP:80350616} Hex, M16 x 90, 8.8, M16x90
18	378246	4	WASHER, {PP:80378246} 16MM

www.KOBMO.BY

12.03(01) MAIN FRAME

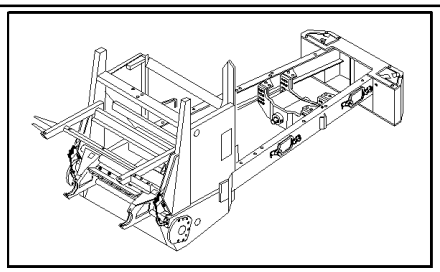

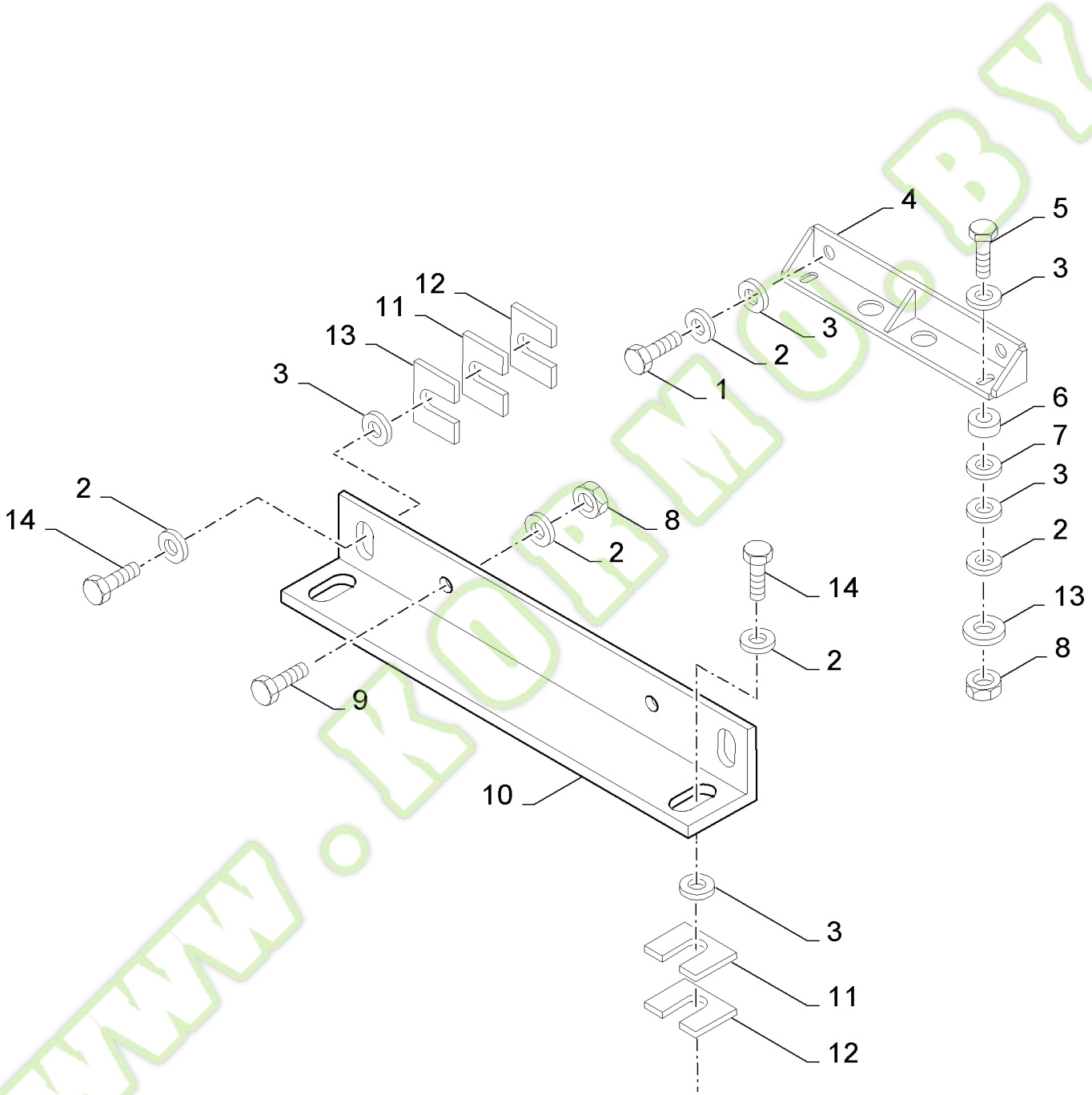

www.KOBMOBY

FX50 SELF-PROPELLED FORAGE HARVESTER (10/02-)

12.03(01) MAIN FRAME

Ref	Part Number	Qty	Description
1	43168	6	SCREW, {PP:80043168} Hex, M16 x 40, 8.8, Hex, M16 x 40, 8.8
2	140048	8	WASHER, LOCK, {PP:80140048} Belleville, M16, 16MM
3	325594	8	WASHER, {PP:80325594} 16MM
4	89812474	1	SUPPORT, , BSN C291
4	84437232	1	SUPPORT, , ASN D292
5	120093	2	SCREW, {PP:80120093} Hex, M16 x 80, 8.8, Hex, M16 x 80, 8.8
6	80456972	2	RING,
7	47407	AR	WASHER, {PP:80047407}
8	100020	8	NUT, {PP:80100020} M16, Cl 8, M16, Cl 8
9	120091	2	SCREW, {PP:80120091} Hex, M16 x 60, 8.8, Hex, M16 x 60, 8.8
10	89594631	1	ANGLE BAR, , BSN C291
10	84437233	1	ANGLE BAR, , ASN D292
11	48689	AR	SHIM, {PP:80048689}
12	66271	AR	SHIM, {PP:80066271}
13	84023895	AR	SHIM,
14	120090	2	SCREW, {PP:80120090} Hex, M16 x 50, 8.8, Hex, M16 x 50, 8.8

www.KOBMO.BY

12.04(01) MAIN FRAME

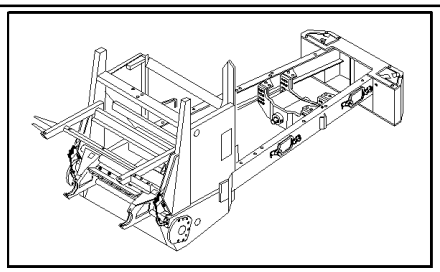

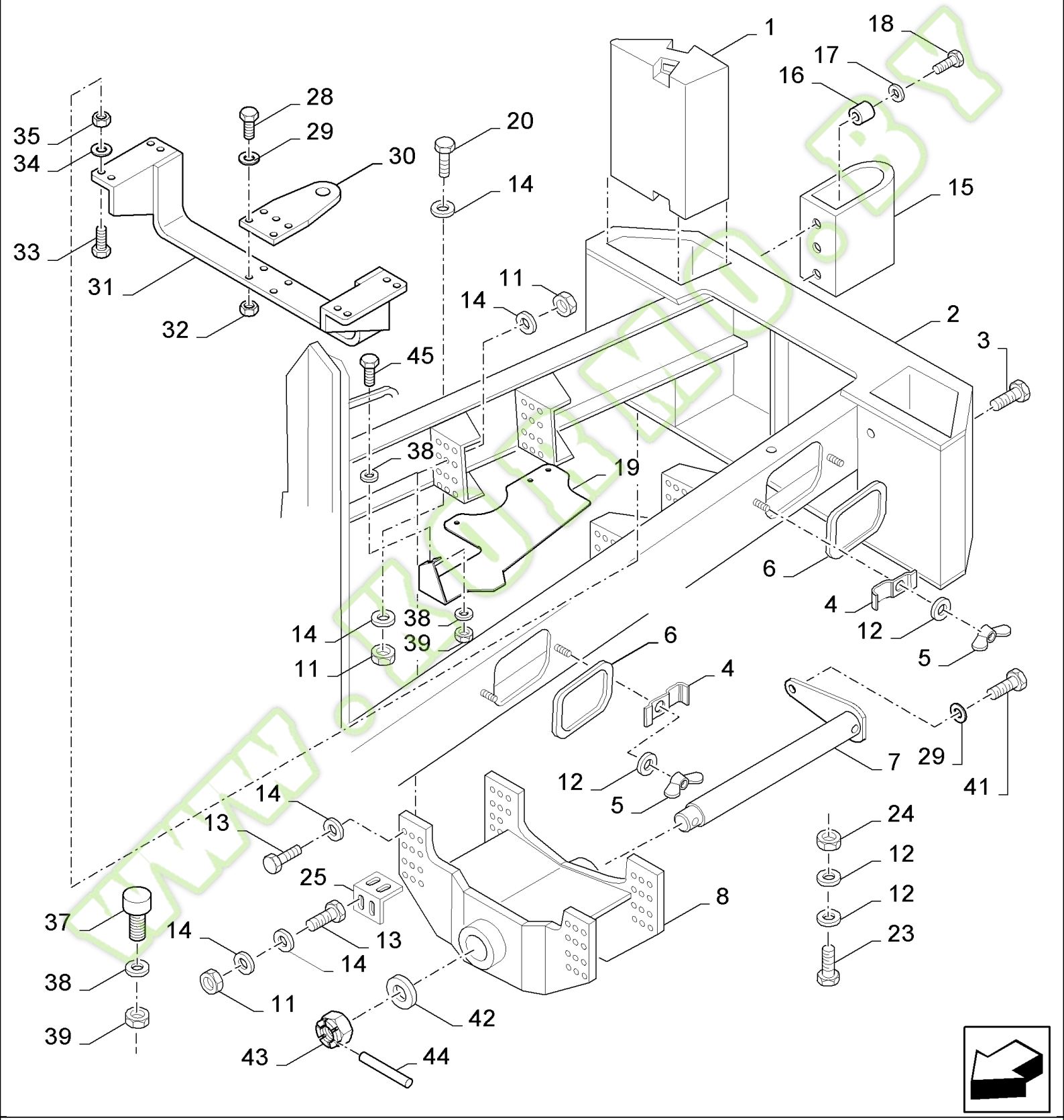

FX50 SELF-PROPELLED FORAGE HARVESTER (10/02-)

12.04(01) MAIN FRAME

Ref	Part Number	Qty	Description
1	84015657	2	WEIGHT, ADVANCE DEVICE,
2	84002649	1	FRAME,
3	80374890	4	SCREW, M20x60
4	425093	6	CLIP, {PP:80425093}
5	100005	6	NUT, WING, {PP:80100005} M8, M8
6	84023436	3	COVER,
7	84439207	1	SHAFT,
8	84439205	1	SUPPORT,
11	100020	60	NUT, {PP:80100020} M16, Cl 8, M16, Cl 8
12	322358	5	WASHER, LOCK, {PP:80322358} Belleville, M8, 8MM
13	120089	56	BOLT, {PP:80120089} Hex, M16 x 40, 8.8, Hex, M16 x 40, 8.8
14	140048	AR	WASHER, LOCK, {PP:80140048} Belleville, M16, 16MM
15	916234	2	BUMPER, {PP:80916234} , FOR NA ONLY
16	419712	6	SPACER, {PP:80419712} , FOR NA ONLY
17	378246	6	WASHER, {PP:80378246} 16MM
18	120090	6	SCREW, {PP:80120090} Hex, M16 x 50, 8.8, Hex, M16 x 50, 8.8
19	84435570	1	PLATE, , FOR FX30-40-50 ONLY
20	120126	4	SCREW, {PP:80120126} Hex, M16 x 30, 8.8, Full Thd, Hex, M16 x 30, 8.8, Full Thd
23	43128	1	SCREW, {PP:80043128} Hex, M8 x 30, 8.8, Cap, HH, CL 8.8, M8 x 1.25 x 30
24	89706690	1	NUT, CL 8, M8 x 1.25 x 13.0
25	84806937	4	SUPPORT,
28	120090	8	SCREW, {PP:80120090} Hex, M16 x 50, 8.8, Hex, M16 x 50, 8.8, FOR NA ONLY
29	140048	AR	WASHER, LOCK, {PP:80140048} Belleville, M16, 16MM, FOR NA ONLY
30	84043069	1	PLATE, COVER, , FOR NA ONLY
31	84032950	1	SUPPORT, , FOR NA ONLY
32	100020	8	NUT, {PP:80100020} M16, Cl 8, M16, Cl 8, FOR NA ONLY
33	80382101	4	SCREW, M20x80, FOR NA ONLY
34	322359	8	WASHER, LOCK, {PP:80322359} Belleville, M20, 20MM, FOR NA ONLY
35	9706694	4	NUT, {PP:89706694} M20, Cl 8, M20, FOR NA ONLY
37	190029	2	INSULATOR BLOCK, {PP:80190029}
38	140045	AR	WASHER, LOCK, {PP:80140045} Belleville, M10, 10MM
39	100016	AR	NUT, {PP:80100016} M10, Cl 8, M10
41	43167	1	BOLT, {PP:80043167} Hex, M16 x 30, 8.8, Full Thd, Hex, M16 x 30, 8.8, Full Thd
42	411961	1	WASHER, {PP:80411961}
43	390822	1	NUT, {PP:80390822} M30 x 1.5, Cl 8, M30
44	130016	1	PIN, SPLIT (COTTER), {PP:80130016} M6.3 x 63,
45	43140	AR	BOLT, {PP:80043140} Hex, M10 x 30, 8.8, M10x30

WWW.SUPERMO.BY

CHOPPER BODY	**DISPOSITIF DE COUPE**	**MECANISMO DE CORTE**	**KNIVBOM**
DISPOSITIVO DI TAGLIO	**SCHNEIDWERK**	**DISPOSITIVO DE CORTE**	**MESSENTROMMEL**

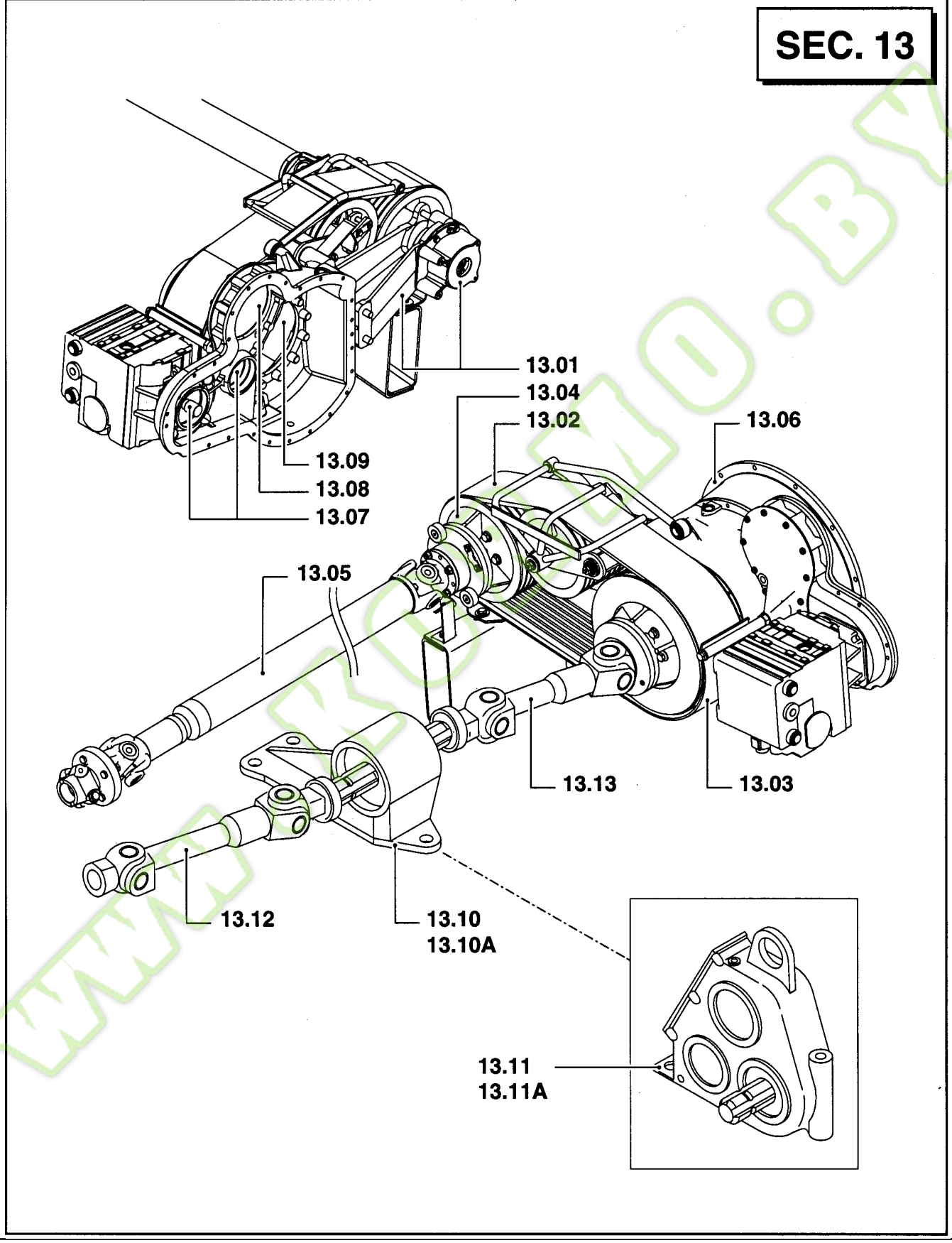

13.000(01) SECTION LIST 13

Ref	Part Number	Qty	Description

www.KORMO.BY

CHOPPER BODY	**DISPOSITIF DE COUPE**	**MECANISMO DE CORTE**	**KNIVBOM**
DISPOSITIVO DI TAGLIO	**SCHNEIDWERK**	**DISPOSITIVO DE CORTE**	**MESSENTROMMEL**

SEC. 13

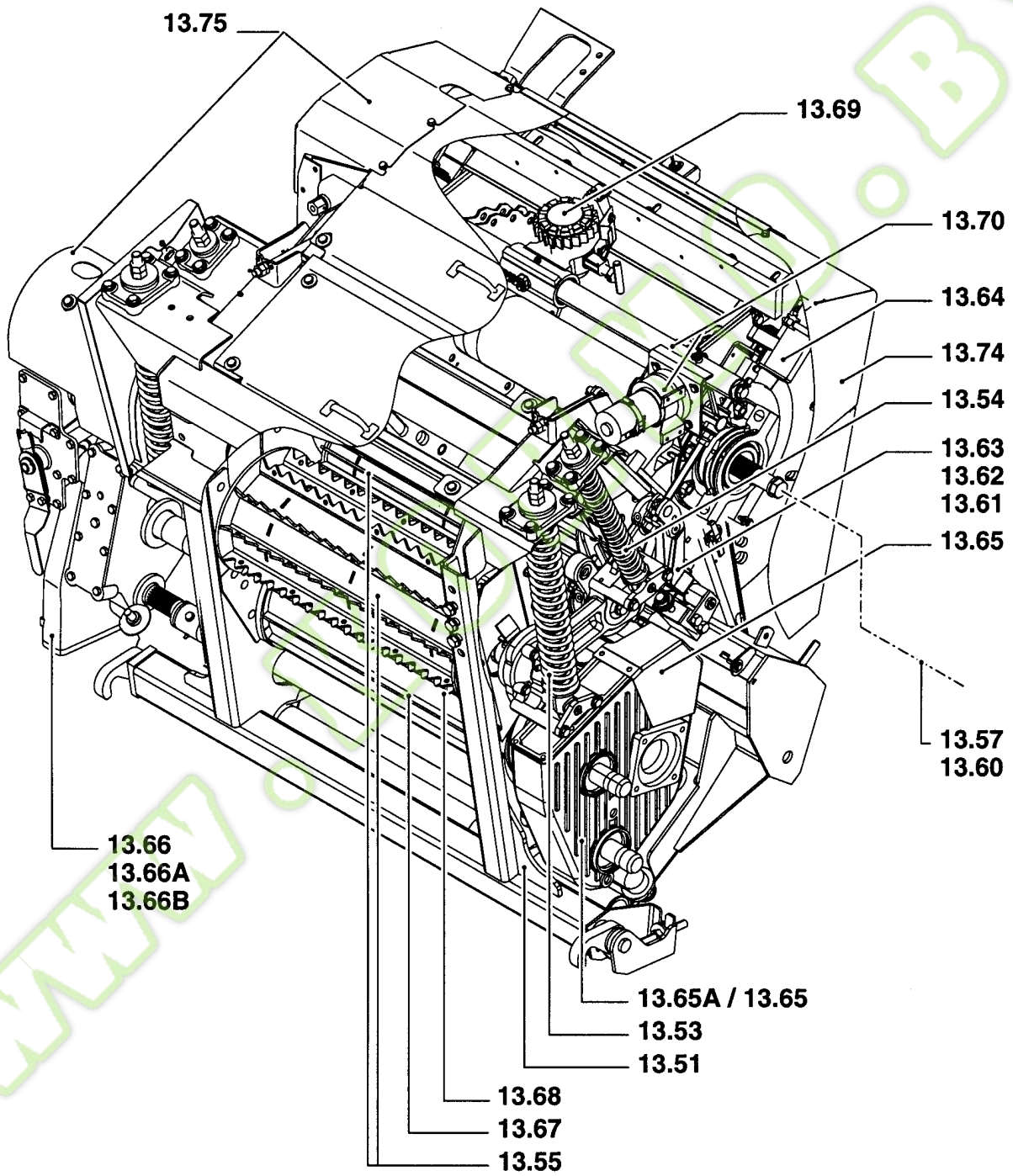

Ref	Part Number	Qty	Description

www.KORMO.BY

CHOPPER BODY	**DISPOSITIF DE COUPE**	**MECANISMO DE CORTE**	**KNIVBOM**
DISPOSITIVO DI TAGLIO	**SCHNEIDWERK**	**DISPOSITIVO DE CORTE**	**MESSENTROMMEL**

SEC. 13

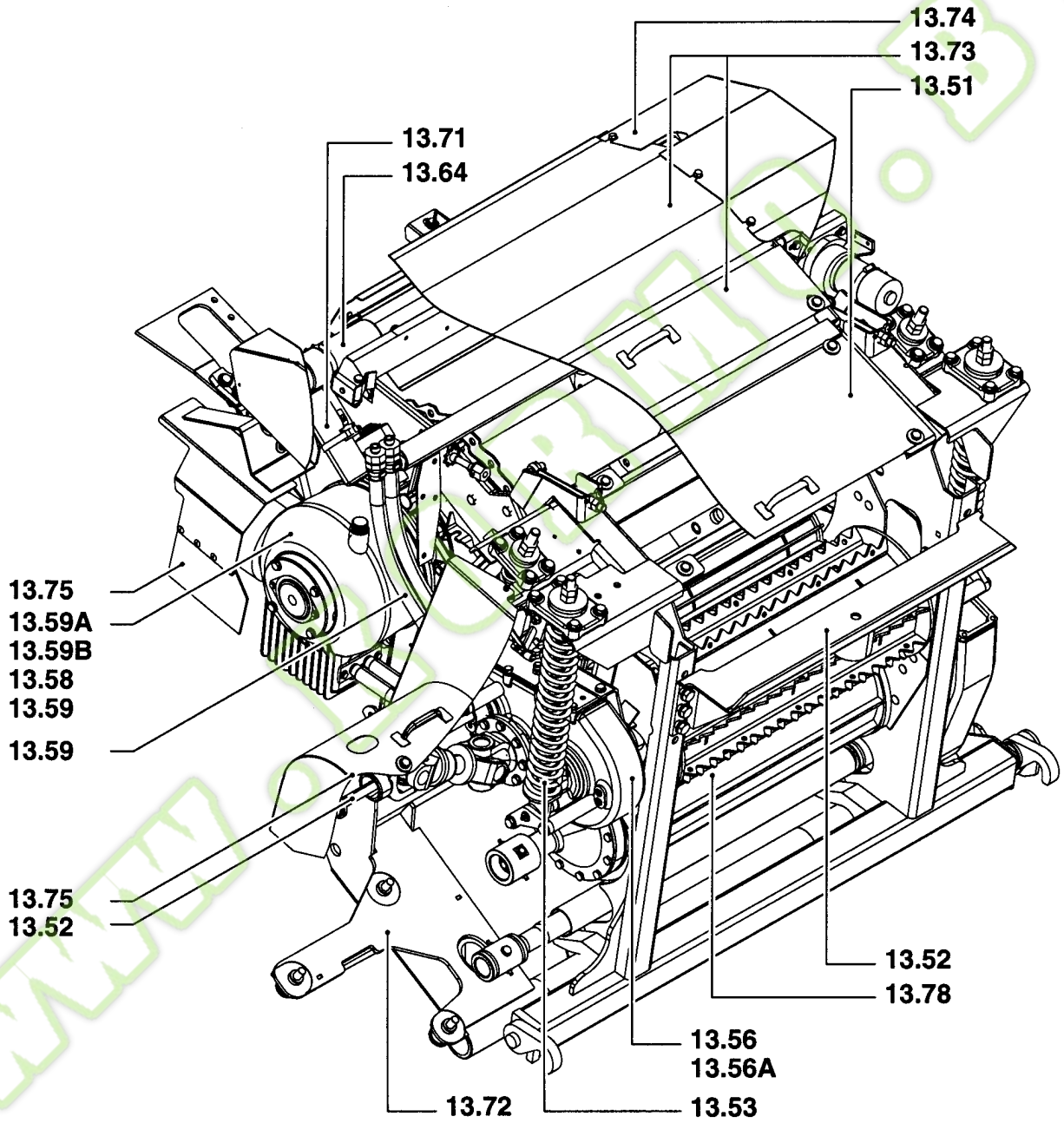

Ref	Part Number	Qty	Description

www.KOBMO.BY

CHOPPER BODY	**DISPOSITIF DE COUPE**	**MECANISMO DE CORTE**	**KNIVBOM**
DISPOSITIVO DI TAGLIO	**SCHNEIDWERK**	**DISPOSITIVO DE CORTE**	**MESSENTROMMEL**

SEC. 13

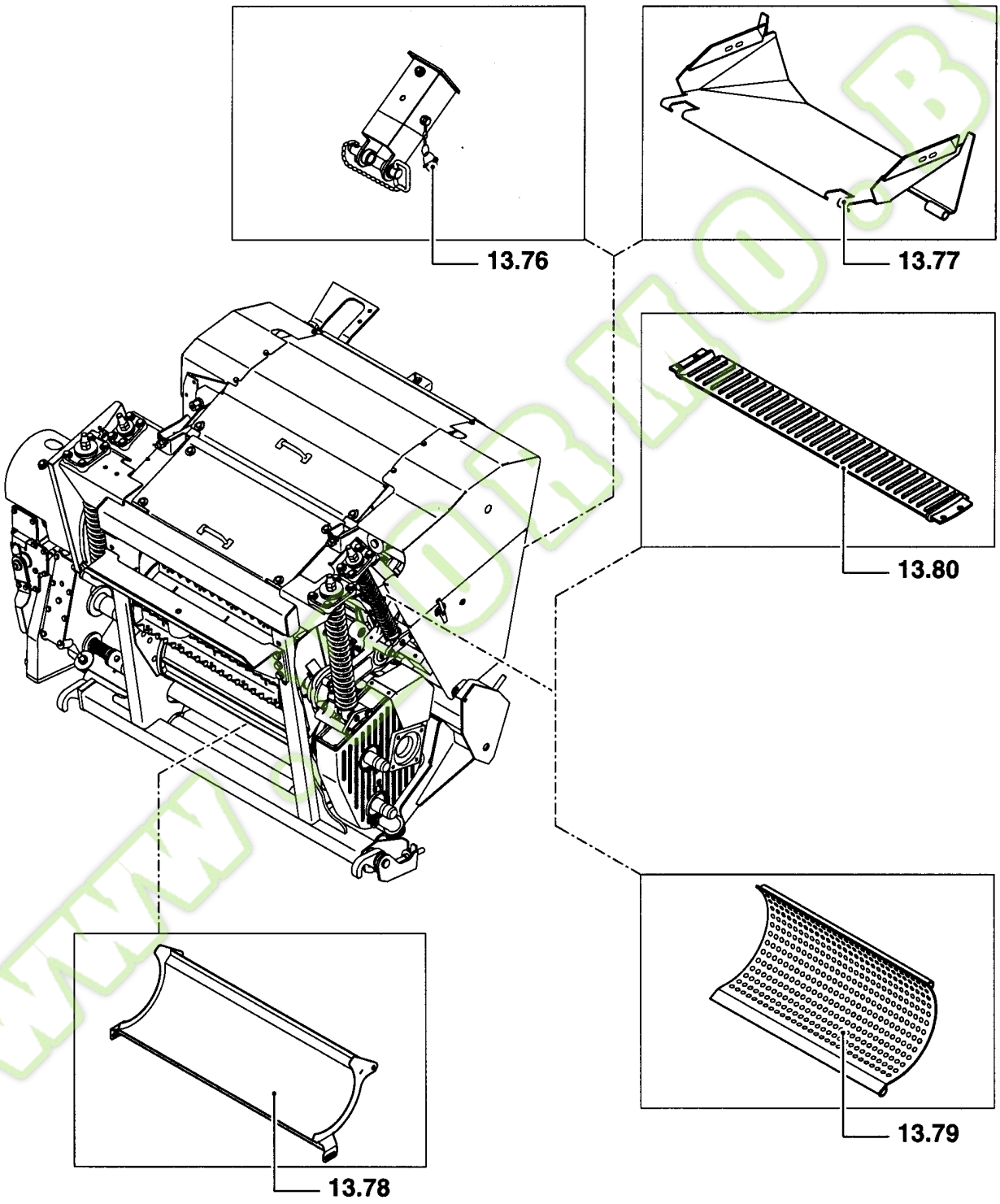

Ref	Part Number	Qty	Description

www.KORMO.BY

13.01(01) MAIN DRIVE

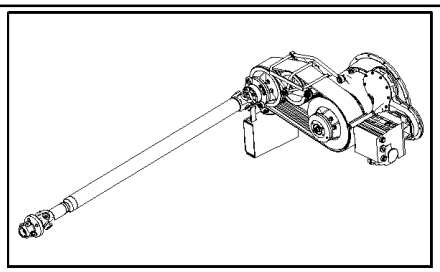

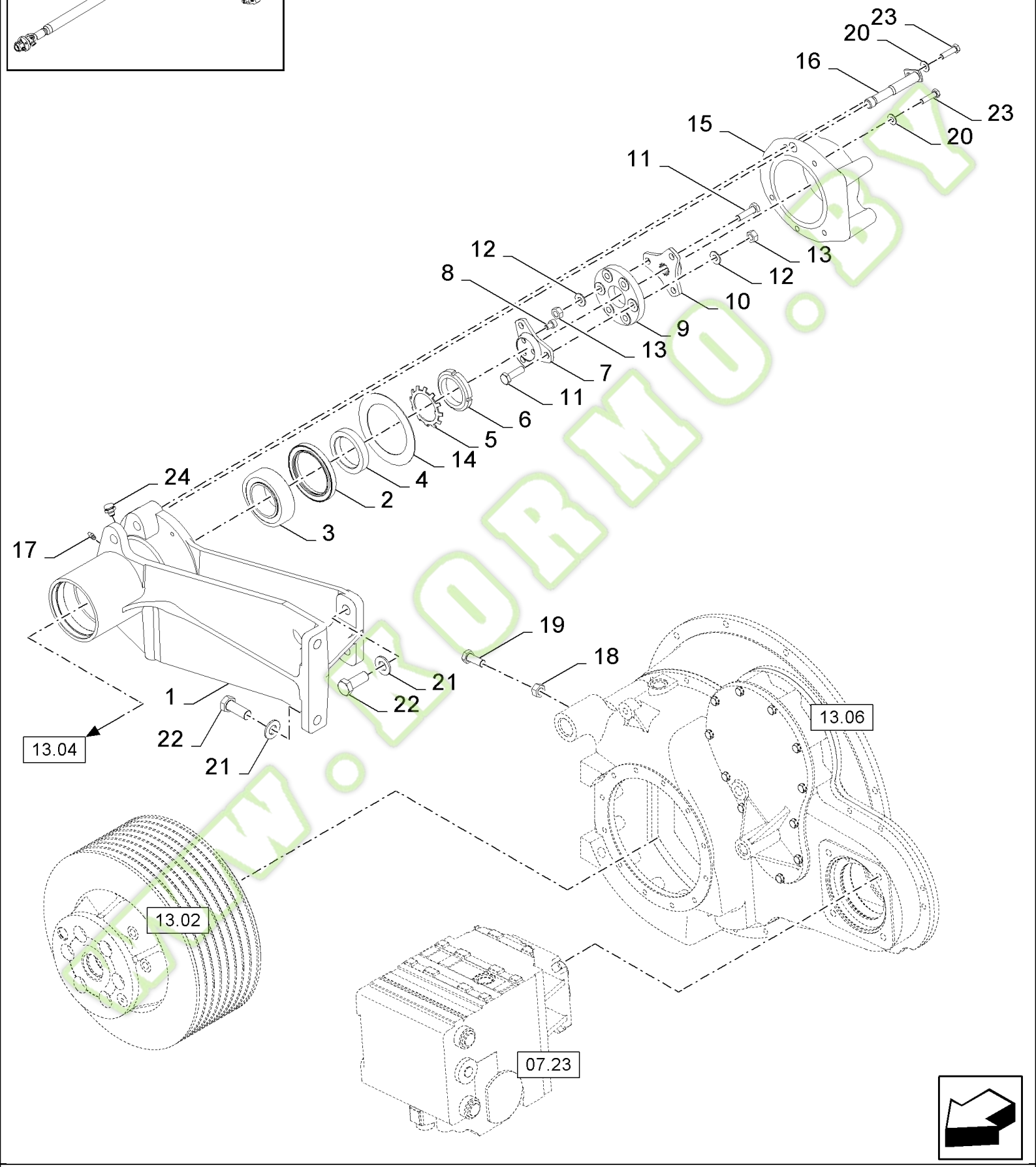

FX50 SELF-PROPELLED FORAGE HARVESTER (10/02-)

13.01(01) MAIN DRIVE

Ref	Part Number	Qty	Description
1	84806926	1	HOUSING, BEARING,
2	220021	1	RING, {PP:80220021}
3	699613	1	BEARING ASSY, {PP:80699613}
4	89811516	1	SPACER,
5	84446406	1	PLATE, LOCKING, , BSN C265
5	84447489	1	PLATE, LOCKING, , ASN D266
6	9513020	1	NUT, {PP:89513020}
7	89811515	1	FLANGE,
8	412697	3	SCREW, {PP:80412697} Hex Soc Hd, M8 x 12, 8.8,
9	9811514	1	JOINT, UNIVERSAL, {PP:89811514}
10	89811517	1	FLANGE,
11	9706704	6	BOLT, {PP:89706704} Hex, M10 x 35, 8.8, Full Thd, M10x35
12	140045	6	WASHER, LOCK, {PP:80140045} Belleville, M10, 10MM
13	100016	6	NUT, {PP:80100016} M10, Cl 8, M10
14	84026074	1	RING,
15	84806924	1	HOUSING, BEARING,
16	84017728	1	PIN, ROLL,
17	321204	1	NIPPLE, LUBE, {PP:80321204}
18	89706685	1	NUT, M12
19	9706687	1	SCREW, {PP:89706687} Hex, M12 x 30, 8.8, M12x30
20	322358	6	WASHER, LOCK, {PP:80322358} Belleville, M8, 8MM
21	140048	4	WASHER, LOCK, {PP:80140048} Belleville, M16, 16MM
22	43168	4	SCREW, {PP:80043168} Hex, M16 x 40, 8.8, Hex, M16 x 40, 8.8
23	43128	6	SCREW, {PP:80043128} Hex, M8 x 30, 8.8, Cap, HH, CL 8.8, M8 x 1.25 x 30
24	46566	1	BREATHER, {PP:80046566}

www.KOMO.BY

13.02(01) MAIN DRIVE

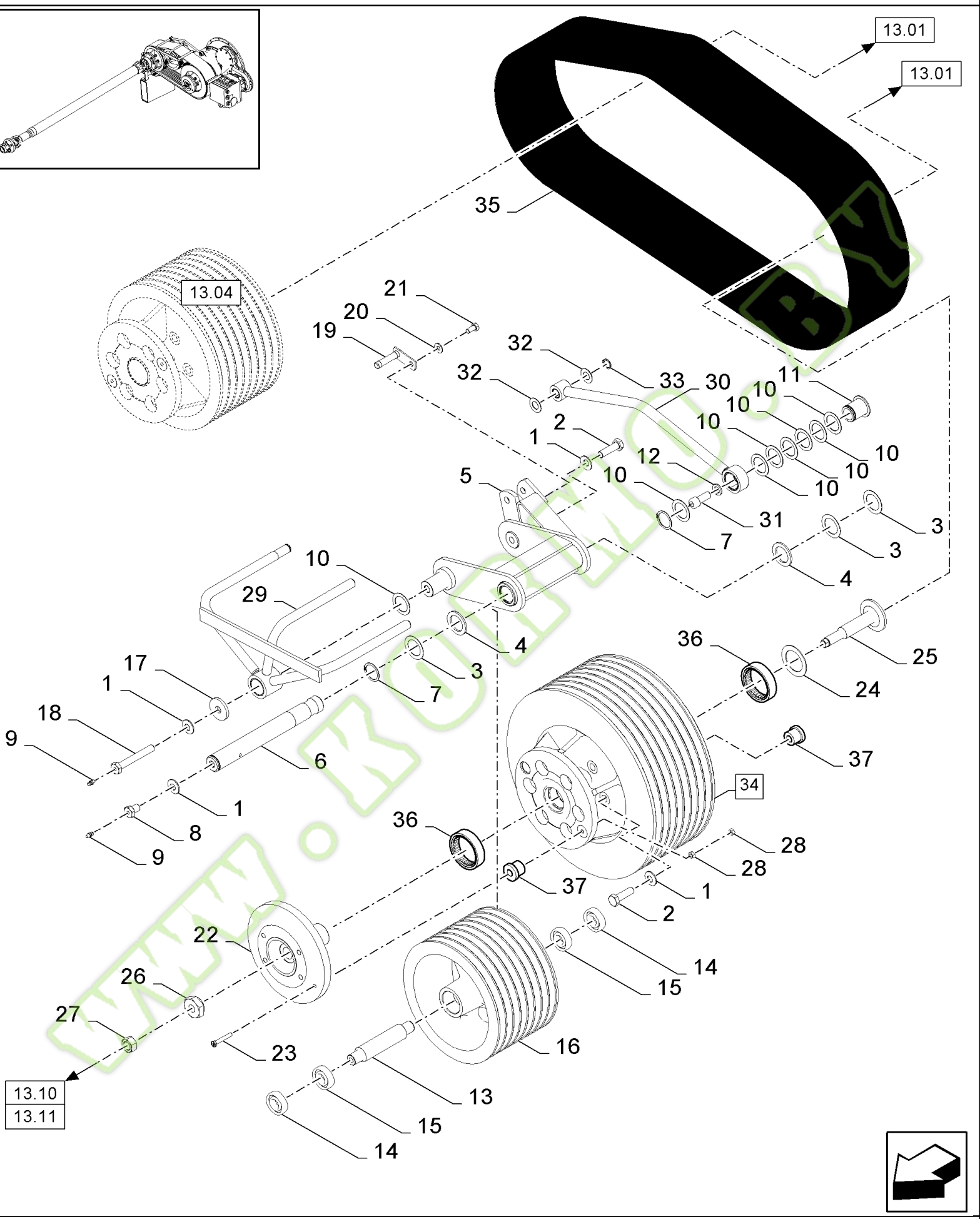

FX50 SELF-PROPELLED FORAGE HARVESTER (10/02-)

13.02(01) MAIN DRIVE

Ref	Part Number	Qty	Description
1	140046	9	WASHER, LOCK, {PP:80140046} Belleville, M12, 12MM
2	86629541	7	BOLT, Hex, M12 x 40, 8.8, Full Thd, M12x40
3	140178	2	WASHER, {PP:80140178} , BSN C297
3	84814901	2	WASHER, , ASN D298
4	441176	AR	WASHER, {PP:80441176}
5	84806917	1	ARM,
6	89516463	1	SHAFT,
7	370003	2	CIRCLIP, {PP:80370003}
8	84320369	1	SCREW,
9	321204	2	NIPPLE, LUBE, {PP:80321204}
10	748212	9	PLATE, ADJUSTING, {PP:80748212}
11	84022343	1	RING,
12	80412123	1	WASHER, LOCK, 10MM
13	80750183	1	SHAFT,
14	44680	2	BEARING ASSY, {PP:80044680}
15	412669	2	BEARING ASSY, {PP:80412669}
16	84806921	1	PULLEY,
17	80395606	1	WASHER,
18	84022344	1	SCREW,
19	84017725	1	ARM,
20	322358	1	WASHER, LOCK, {PP:80322358} Belleville, M8, 8MM
22	84807361	1	FLANGE,
23	80536887	1	SCREW,
24	140061	2	WASHER, {PP:80140061}
25	84012444	2	SHAFT,
26	84014953	1	NUT,
27	364164	1	NUT, {PP:80364164} Thin, M16 x 1.5, Cl 04, M16
28	9706755	6	NUT, {PP:89706755} M6, Cl 8, M6
29	84806929	1	GUIDE,
30	84806930	1	ARM,
31	84022173	1	SCREW, Hex Soc Hd, M8 x 35, 8.8,
32	11158	2	WASHER, {PP:80011158}
33	301615	1	RING, {PP:80301615}
34	84806932	1	PULLEY, (36,37), BSN C322
34	84446334	1	PULLEY, (36), ASN D323
34	84806931	1	PULLEY, (36,37), LOW SPEED, NA ONLY, BSN C322
34	84446105	1	PULLEY, (36), LOW SPEED, NA ONLY, ASN D323
35	84074273	1	SET OF BELTS,
35	84036579	1	SET OF BELTS, , LOW SPEED, NA ONLY
36	84015464	2	BEARING ASSY,
37	84004370	2	SLEEVE,
21	16043224	1	SCREW, Hex, M8 x 16, 8.8, Full Thd, M8x16

EMT-KOBMO.BY

13.03(01) MAIN DRIVE

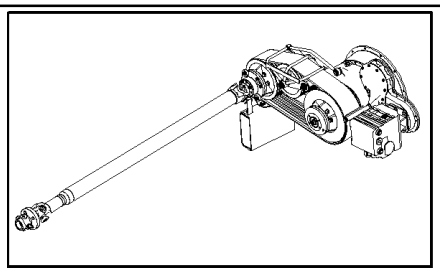

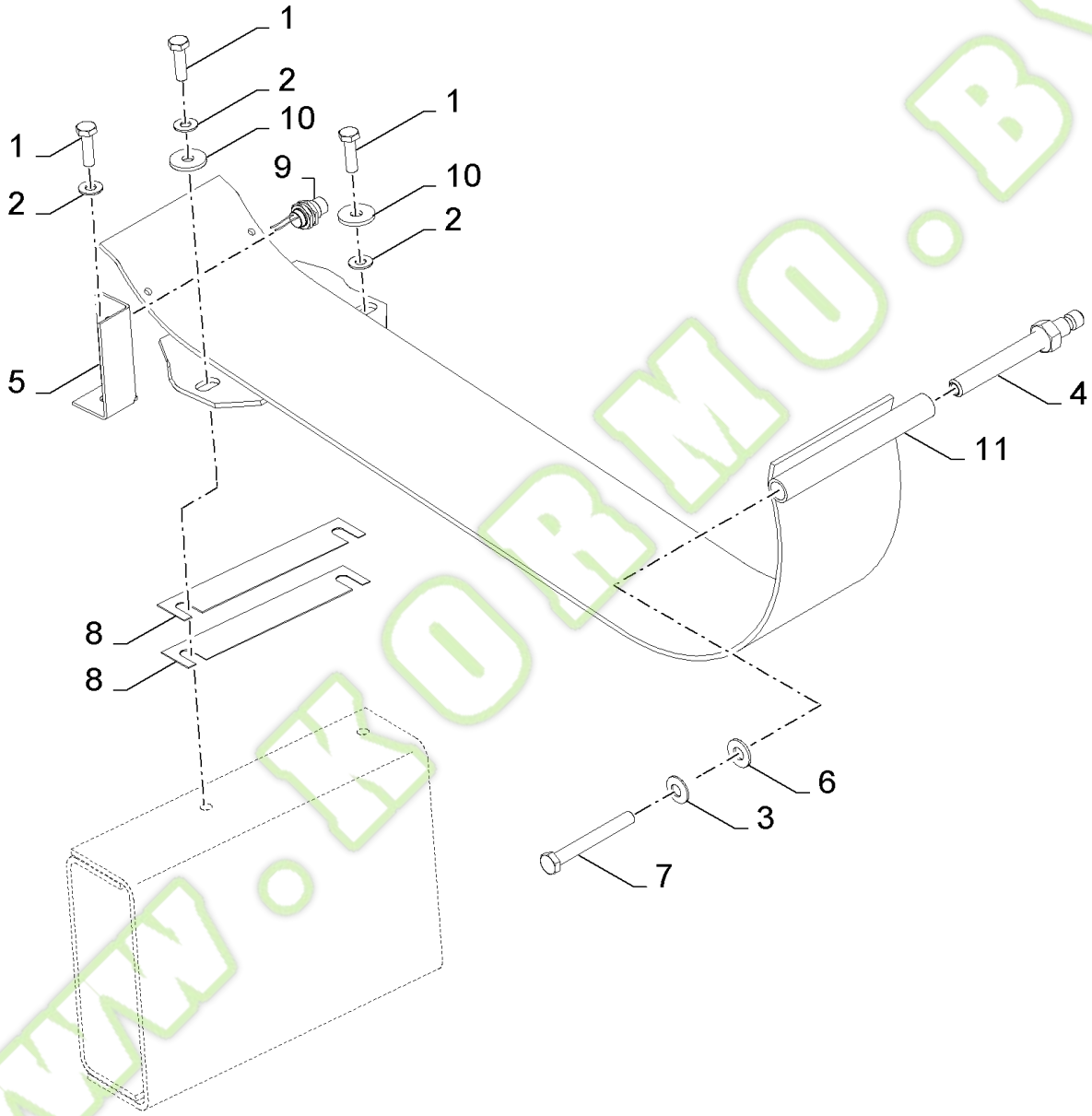

www.ROBMO.BY

FX50 SELF-PROPELLED FORAGE HARVESTER (10/02-)

13.03(01) MAIN DRIVE

Ref	Part Number	Qty	Description
1	9706704	3	BOLT, {PP:89706704} Hex, M10 x 35, 8.8, Full Thd, M10x35
2	140045	3	WASHER, LOCK, {PP:80140045} Belleville, M10, 10MM
3	140046	1	WASHER, LOCK, {PP:80140046} Belleville, M12, 12MM
4	84429744	1	ROD,
5	84043850	1	SUPPORT, , BSN C322
5	84446360	1	SUPPORT, , ALSO PART OF PTO UPGRADE KIT 84454653 (C322), ASN D323
6	378245	1	WASHER, {PP:80378245} 12MM
7	374887	1	SCREW, {PP:80374887} Hex, M12 x 100, 8.8, M12x100
8	84078887	AR	SHIM,
9	84056994	1	SENSOR,
10	140042	2	WASHER, LOCK, {PP:80140042} M10 x 34 x 3, 10MM
11	84806922	1	GUIDE,
11	84814767	1	GUIDE, , LOW SPEED, BSN C297
11	84448249	1	GUIDE, , LOW SPEED, ASN D298

www.KOBMO.BY

13.04(01) MAIN DRIVE

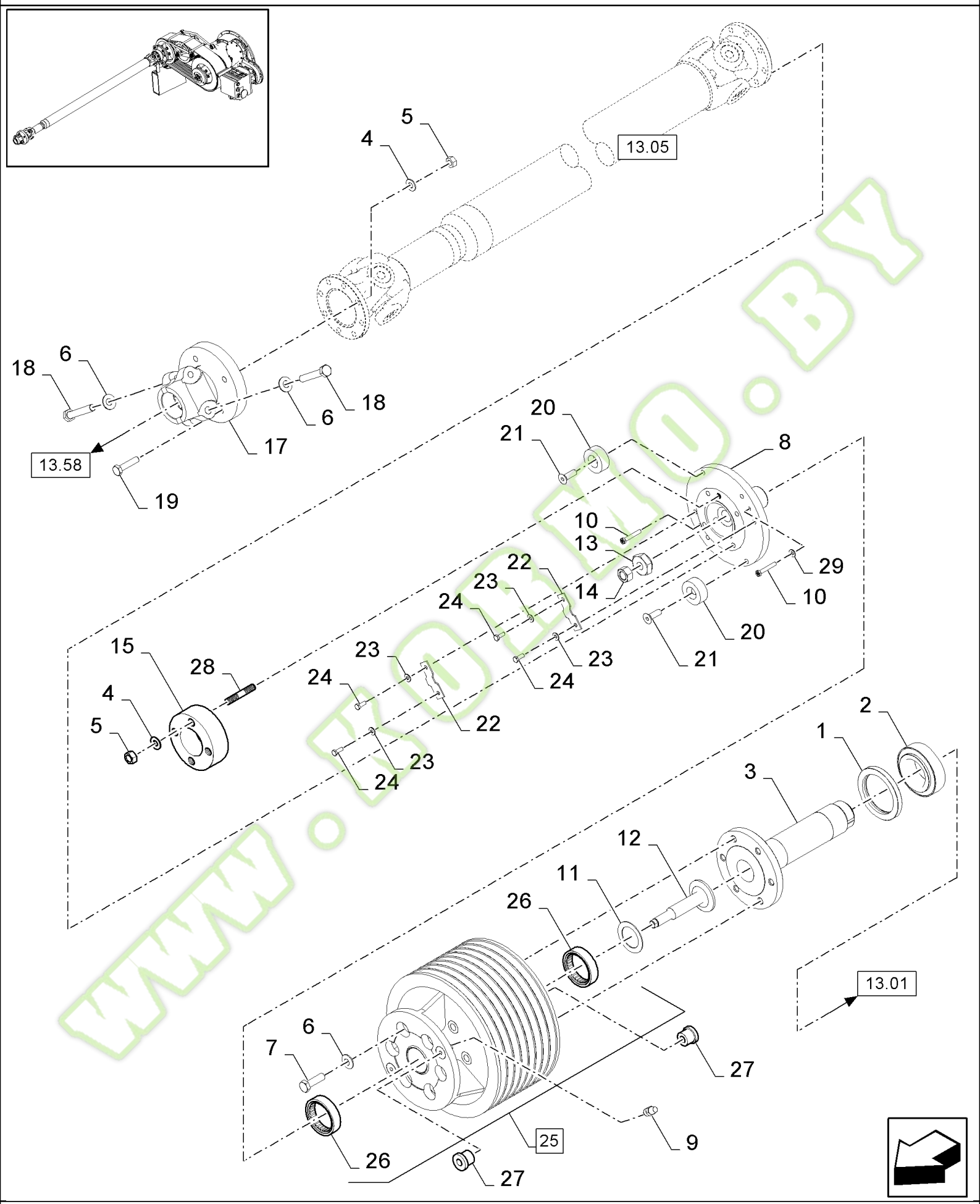

FX50 SELF-PROPELLED FORAGE HARVESTER (10/02-)

13.04(01) MAIN DRIVE

Ref	Part Number	Qty	Description
1	220021	1	RING, {PP:80220021}
2	699613	1	BEARING ASSY, {PP:80699613}
3	89811518	1	SHAFT,
4	140045	AR	WASHER, LOCK, {PP:80140045} Belleville, M10, 10MM
5	100016	AR	NUT, {PP:80100016} M10, Cl 8, M10
6	140046	8	WASHER, LOCK, {PP:80140046} Belleville, M12, 12MM
7	86629541	6	BOLT, Hex, M12 x 40, 8.8, Full Thd, M12x40
8	84806928	1	FLANGE, , BSN C322
8	84446295	1	FLANGE, , ASN D323
8	84454652	1	FLANGE, , PART OF PTO UPGRADE KIT 84454653 (C322), BSN C322
9	321204	2	NIPPLE, LUBE, {PP:80321204}
10	80536887	2	SCREW,
11	140061	2	WASHER, {PP:80140061}
12	84012444	2	SHAFT,
13	84014953	1	NUT,
14	364164	1	NUT, {PP:80364164} Thin, M16 x 1.5, Cl 04, M16x1.5
15	84989815	1	FLANGE, , BSN C322
16	43138	4	SCREW, {PP:80043138} Hex, M10 x 20, 8.8, Full Thd, M10x20
17	89850296	1	FLANGE, , BSN C322
17	84446412	1	FLANGE, , ALSO PART OF PTO UPGRADE KIT 84454653 (C322), ASN D323
18	9706717	2	SCREW, {PP:89706717} Hex, M12 x 70, 8.8, Full Thd, Hex, M12 x 70, 8.8, Full Thd
19	325829	4	SCREW, {PP:80325829} Hex, M10 x 45, 8.8, M10x45
20	84043324	2	WASHER,
21	80320772	2	SCREW,
22	84440202	2	PLATE,
23	322357	4	WASHER, LOCK, {PP:80322357} Belleville, M6, Belleville, M6
24	86508568	4	SCREW, Hex, M6 x 16, 8.8,
25	84806931	1	PULLEY, (26,27), BSN C322
25	84446105	1	PULLEY, (26), ASN D323
26	84015464	2	BEARING ASSY,
27	84434534	2	SLEEVE,
28	84433367	4	STUD, , BSN C322
28	43138	4	SCREW, {PP:80043138} Hex, M10 x 20, 8.8, Full Thd, M10x20, ASN D323
29	86592710	10	WASHER, M6 x 17 x 3, , PART OF PTO UPGRADE KIT 84454653 (C322), BSN C322

www.KOEMO.BY

13.05(01) POWER TAKE-OFF

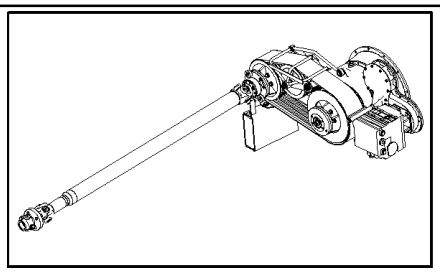

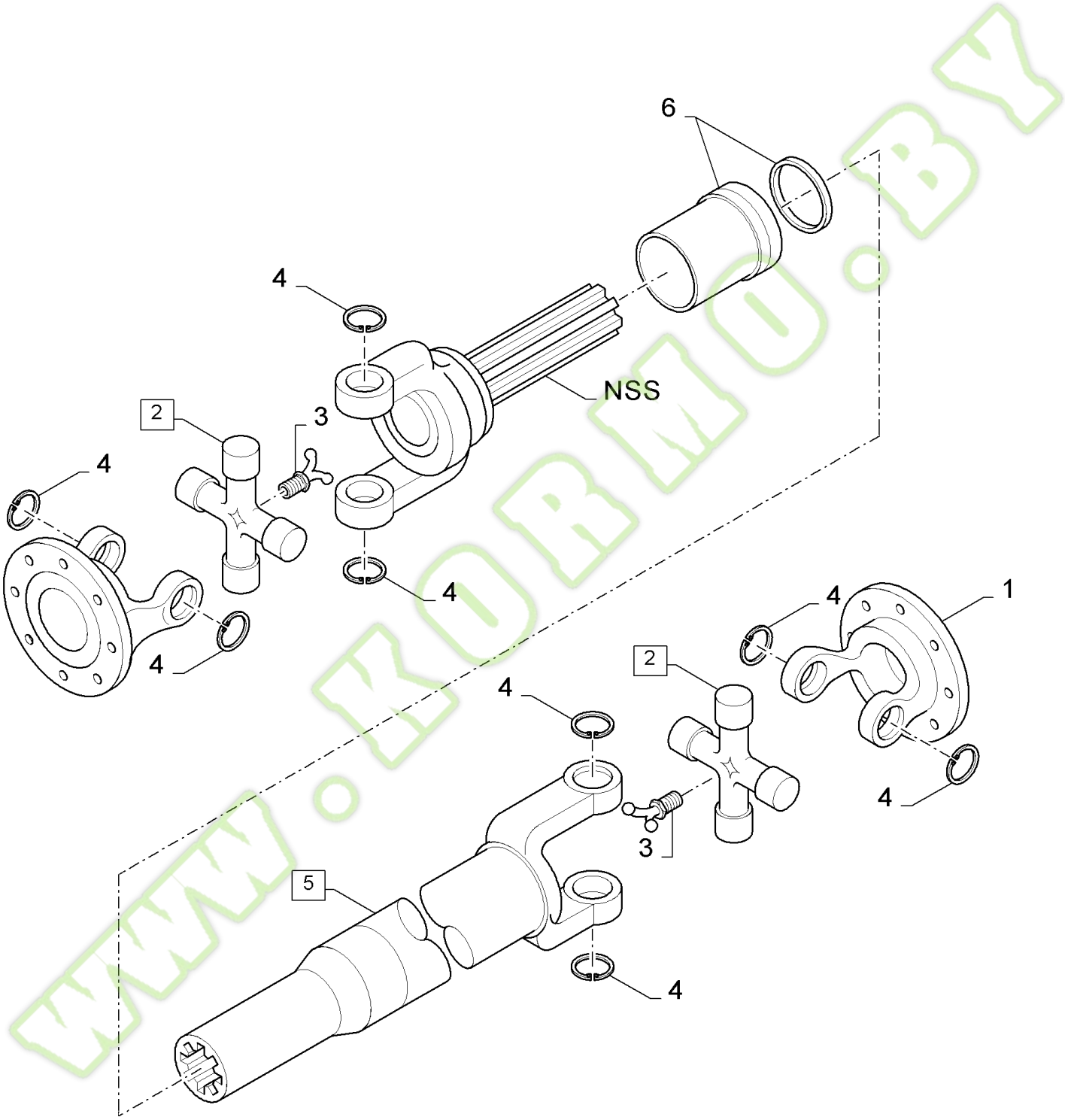

www.ROBMO.BY

13.05(01) POWER TAKE-OFF

Ref	Part Number	Qty	Description
	89850690	1	SHAFT, PTO, (1 to 6), BSN C322
	84814579	1	SHAFT, PTO, , NO SUB-PARTS AVAILABLE YET, ALSO PART OF PTO UPGRADE KIT 84454653 (C322), ASN D323
1	84031229	2	YOKE,
2	84031230	2	SPIDER, (3,4)
3	84039155	2	NIPPLE, LUBE,
4	84031231	8	CIRCLIP,
5	84031232	1	SHAFT, (NSS)
6	84045266	1	ELEMENT, SEALING, , WELDED PARTS

www.KOBMO.BY

13.06(01) MAIN DRIVE, GEARBOX - C297

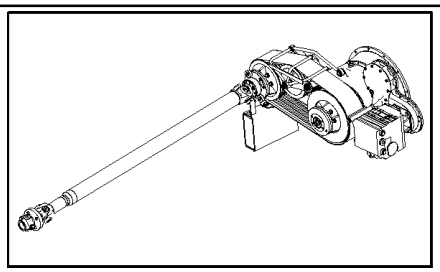

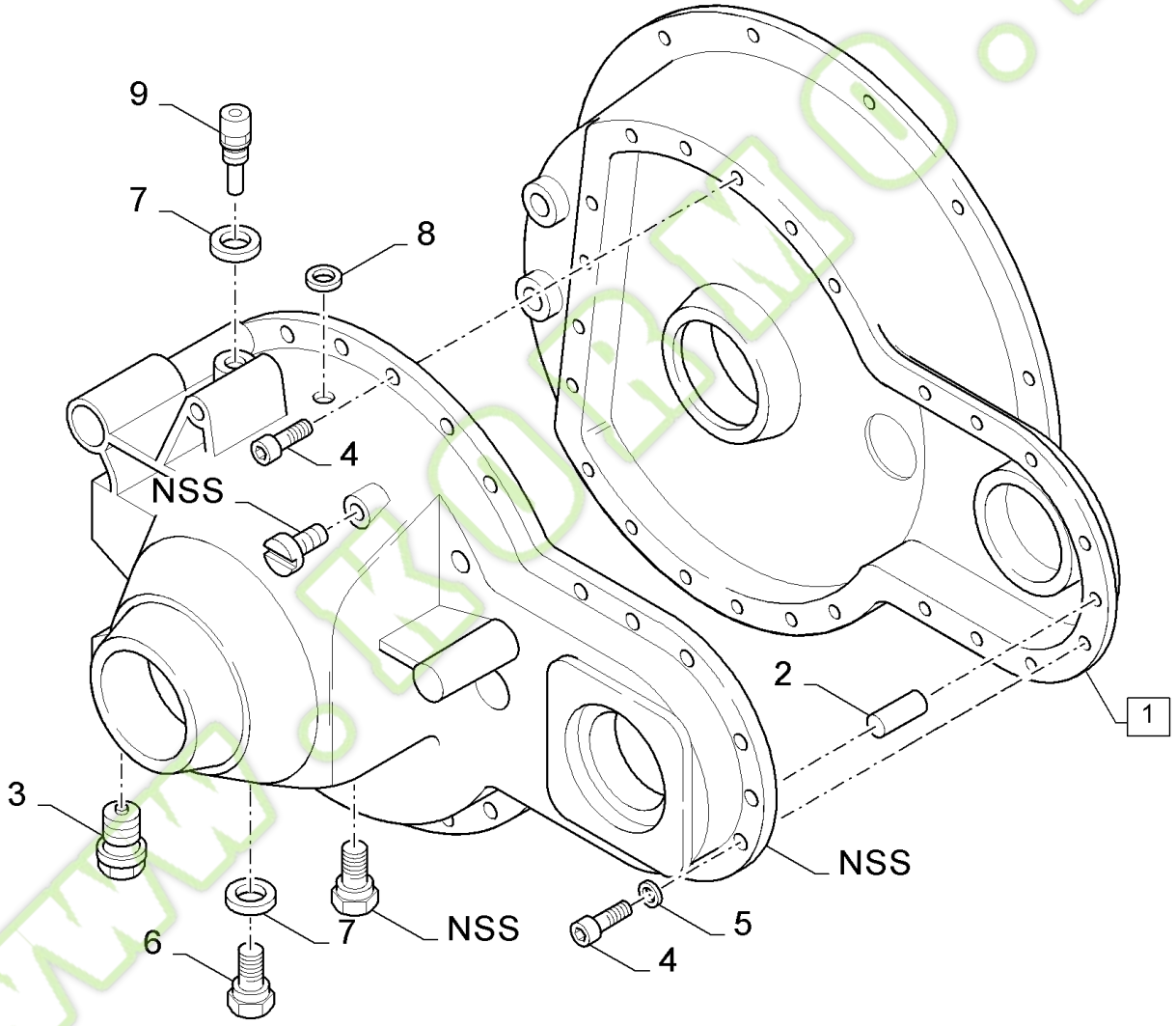

www.KOBMO.BY

13.06(01) MAIN DRIVE, GEARBOX - C297

Ref	Part Number	Qty	Description
	84320147	1	GEARBOX, Incl.figs. 13.06 to 13.10
1	84320149	1	HOUSING, (2,4,5)
2	84021961	2	PIN, ROLL,
3	322062500	1	PLUG, Magnetic
4	120163	24	SCREW, {PP:80120163} Hex Soc Hd, M8 x 25, 8.8, M8x25
5	322358	AR	WASHER, LOCK, {PP:80322358} Belleville, M8, 8MM
6	84021927	1	PLUG,
7	84021928	1	RING,
8	220104	1	RING, {PP:80220104}
9	84021931	1	BREATHER,

www.KOBMO.BY

13.06A(01) MAIN DRIVE, GEARBOX - D298

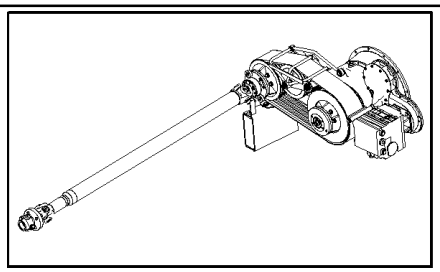

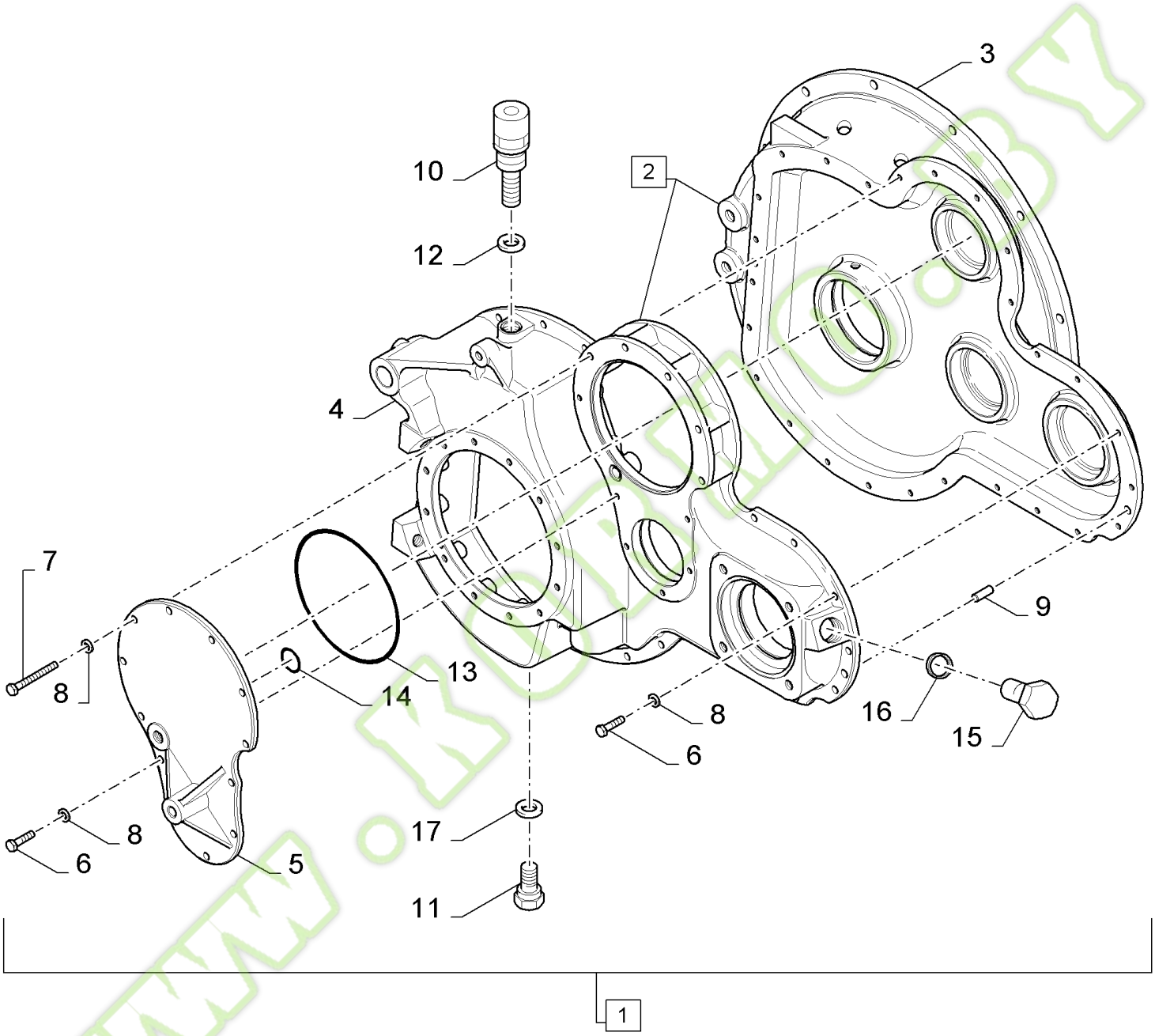

www.Robin.by

FX50 SELF-PROPELLED FORAGE HARVESTER (10/02-)

13.06A(01) MAIN DRIVE, GEARBOX - D298

Ref	Part Number	Qty	Description
1	84429112	1	GEARBOX, Incl. figs. 13.06A to 13.10A
2	84429113	1	HOUSING, (3,4)
3	NSS	1	NOT SERVICED SEPARATELY,
4	NSS	1	NOT SERVICED SEPARATELY,
5	84806689	1	COVER,
6	43127	28	BOLT, {PP:80043127} Hex, M8 x 25, 8.8, M8x25
7	43133	5	SCREW, {PP:80043133} Hex, M8 x 80, 8.8, M8x80
8	80681	33	WASHER, LOCK, {PP:80080681} 5/16", 8MM
9	84021961	2	PIN, ROLL,
10	84021931	1	BREATHER,
11	84021927	1	PLUG,
12	84021928	1	RING,
13	84443273	1	O-RING,
14	84814913	1	SEAL,
15	84443272	1	SCREW,
16	84443271	1	WASHER, LOCK,
17	84021928	1	RING, , BSN C345
17	87316477	1	WASHER, SEALING, , ASN D346

www.KOBMO.BY

13.07(01) MAIN DRIVE, GEARBOX - C297

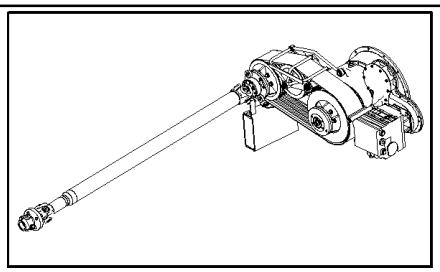

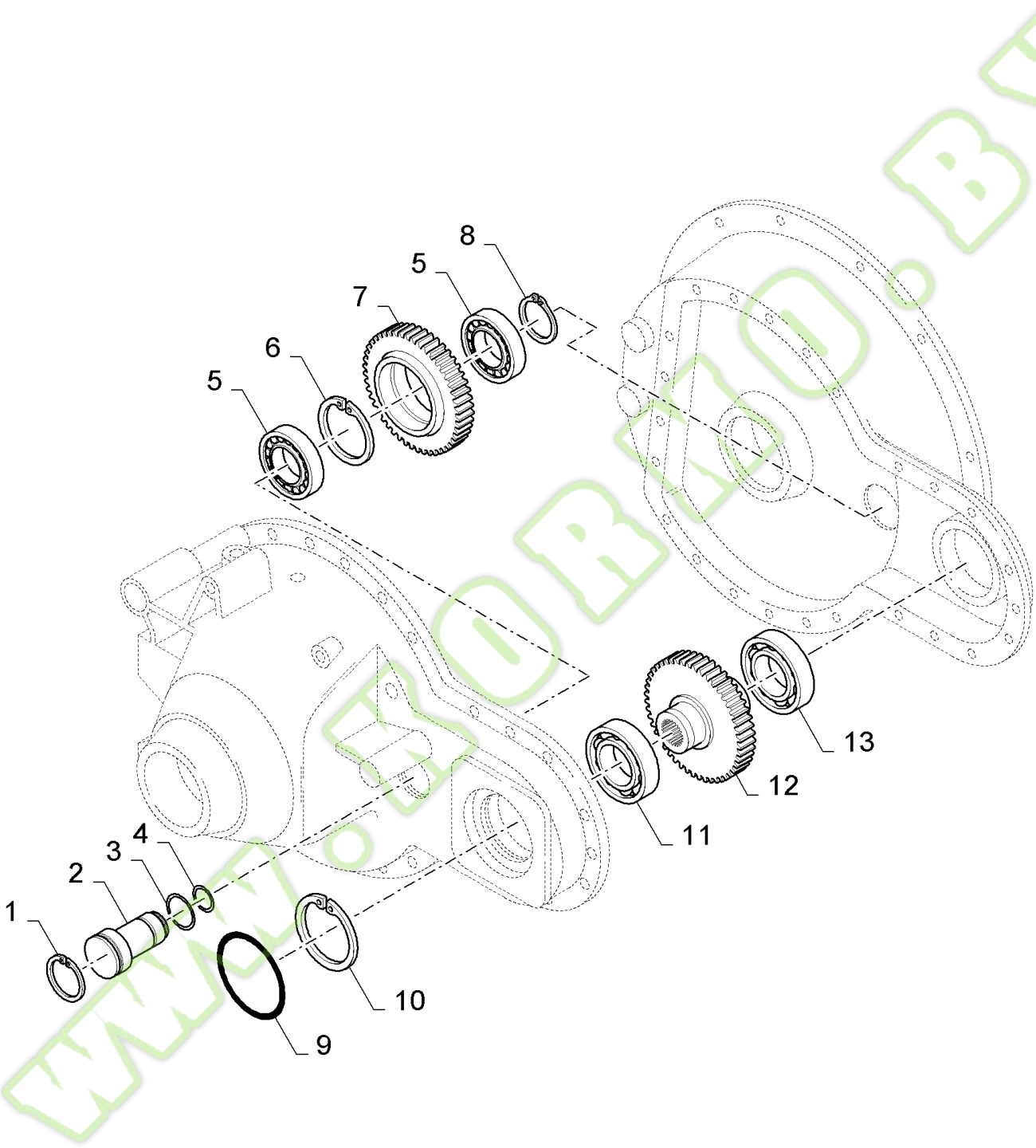

www.ROBKO.BY

FX50 SELF-PROPELLED FORAGE HARVESTER (10/02-)

13.07(01) MAIN DRIVE, GEARBOX - C297

Ref	Part Number	Qty	Description
1	758562	1	RING, {PP:80758562}
2	84021954	1	SPINDLE,
3	84021956	1	O-RING,
4	84021955	1	O-RING,
5	84021953	2	BEARING ASSY,
6	370013	1	RING, SNAP, {PP:80370013}
7	84021952	1	GEAR,
8	440442	1	CIRCLIP, {PP:80440442}
9	84021951	1	O-RING,
10	370026	1	CIRCLIP, {PP:80370026}
11	378724	1	BEARING ASSY, {PP:80378724}
12	84021950	1	GEAR,
13	327910	1	BEARING ASSY, {PP:80327910}

www.KOBMO.BY

13.07A(01) MAIN DRIVE, GEARBOX - D298

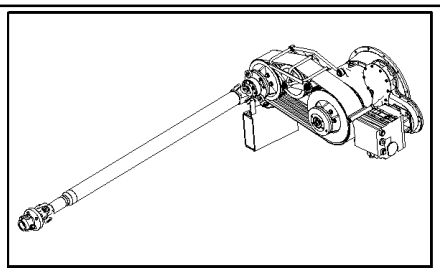

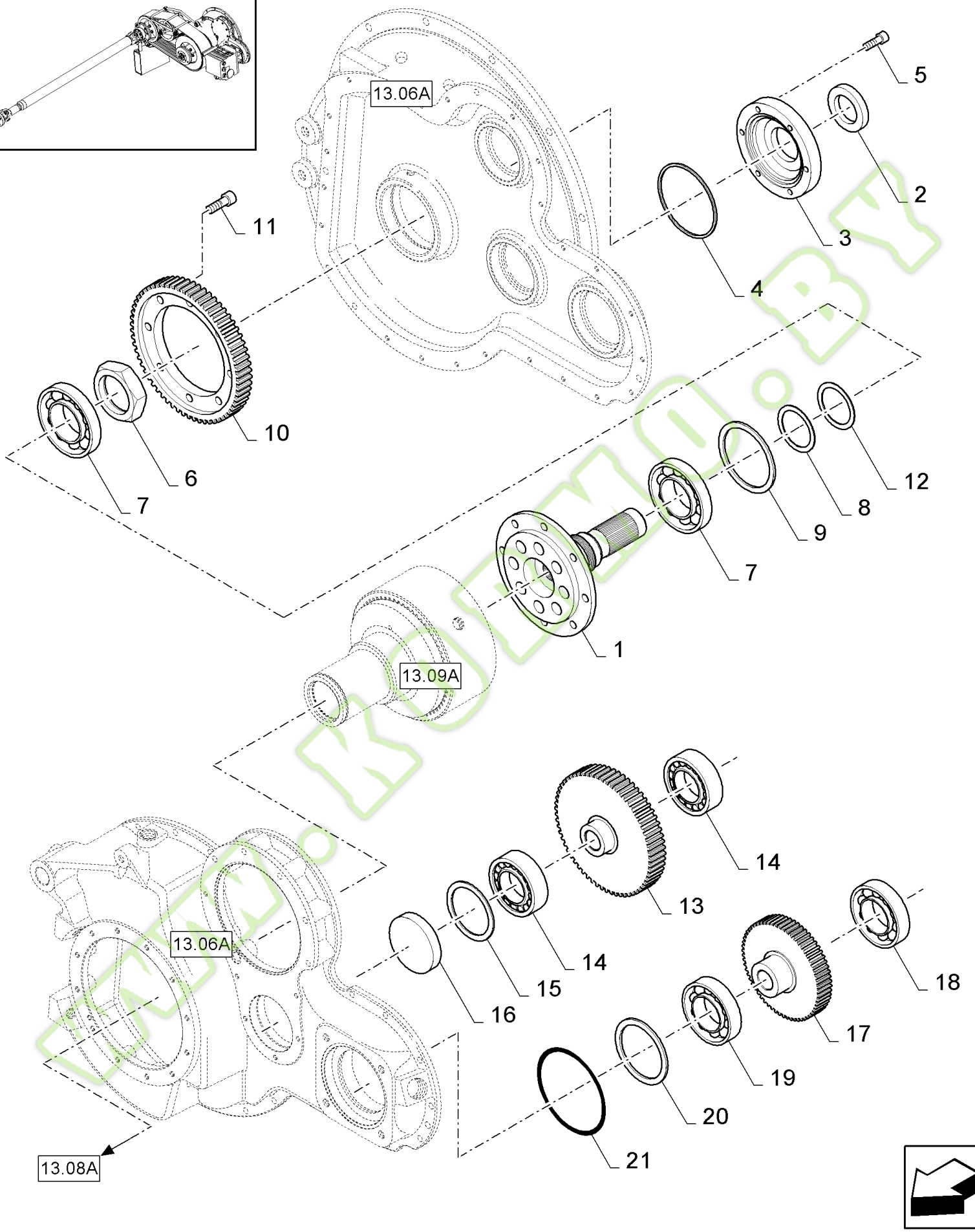

FX50 SELF-PROPELLED FORAGE HARVESTER (10/02-)

13.07A(01) MAIN DRIVE, GEARBOX - D298

Ref	Part Number	Qty	Description
1	84807767	1	SHAFT, CONTROL,
2	84074274	1	RING, OIL SCRAPER,
3	84807766	1	COVER,
4	84021940	1	O-RING,
5	120163	6	SCREW, {PP:80120163} Hex Soc Hd, M8 x 25, 8.8, M8x25
6	84021938	1	NUT,
7	84021937	2	BEARING ASSY,
8	84807768	2	RING,
9	301652	1	RING, SNAP, {PP:80301652}
10	84817556	1	GEAR,
11	84021936	8	SCREW, M12x30
12	84818752	1	RING,
13	84807769	1	GEAR,
14	84807782	2	BEARING ASSY,
15	370013	1	RING, SNAP, {PP:80370013}
16	84443270	1	CAP,
17	84817555	1	GEAR,
18	9780033	1	BEARING ASSY, {PP:89780033}
19	378724	1	BEARING ASSY, {PP:80378724}
20	370026	1	CIRCLIP, {PP:80370026}
21	9673006	1	O-RING, {PP:89673006}

www.KOBMO.BY

13.08(01) MAIN DRIVE, GEARBOX - C297

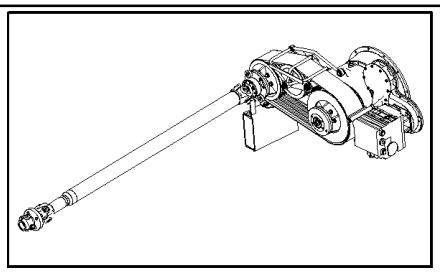

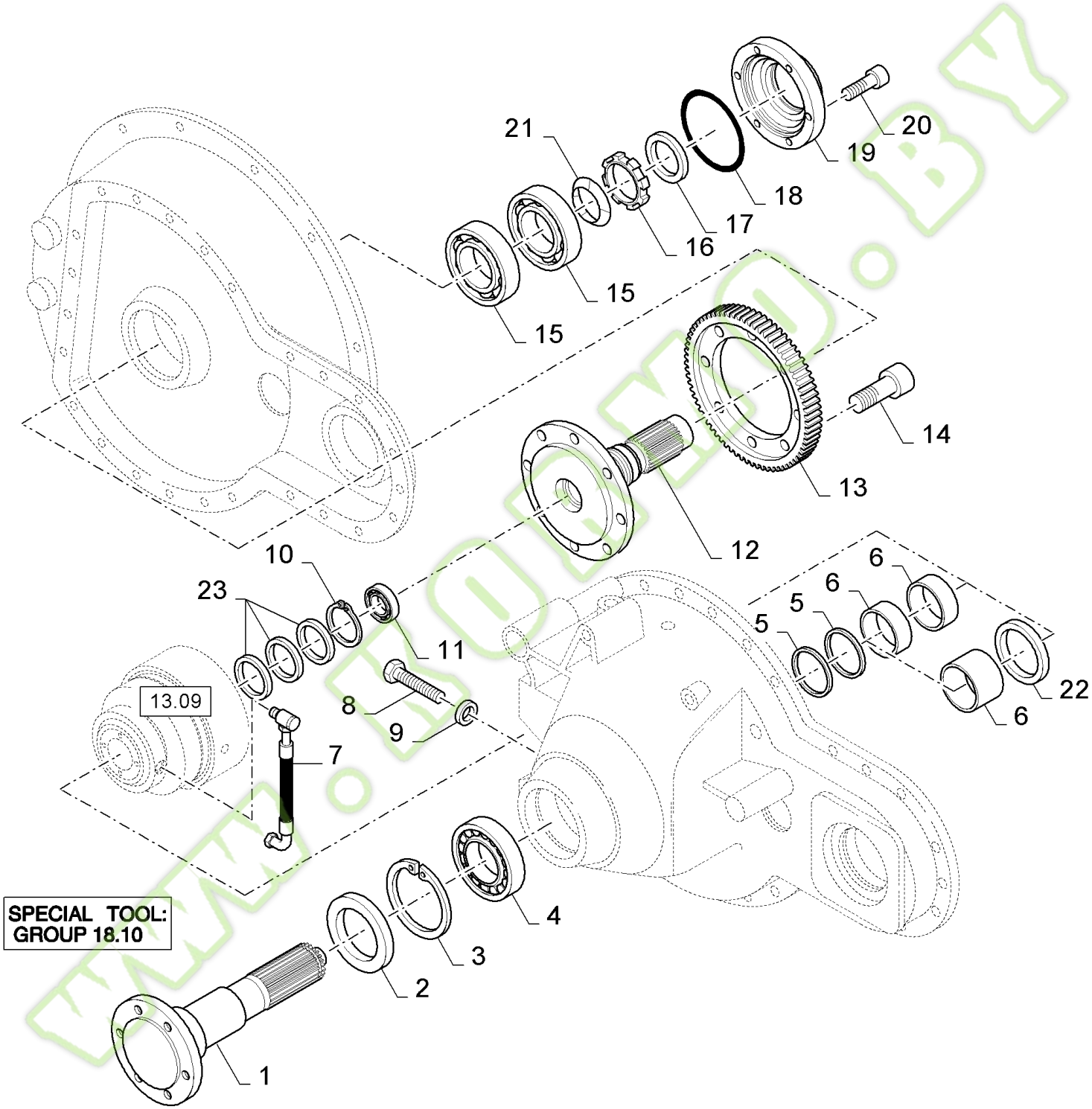

FX50 SELF-PROPELLED FORAGE HARVESTER (10/02-)

13.08(01) MAIN DRIVE, GEARBOX - C297

Ref	Part Number	Qty	Description
1	84021944	1	SHAFT, CONTROL,
2	84021949	1	RING,
3	301652	1	RING, SNAP, {PP:80301652}
4	84074234	1	BEARING ASSY,
5	556831	AR	SHIM, {PP:80556831}
6	84429247	1	BUSHING,
7	84320145	1	HOSE, FLEXIBLE, , USE SPECIAL TOOL FOR MOUNTING
8	84607596	1	SCREW, Hex Soc, M16 x 60, M16x60
9	140020	1	WASHER, {PP:80140020} M16 x 30 x 3, 16MM
10	370008	1	CIRCLIP, {PP:80370008}
11	84021945	1	BEARING ASSY,
12	84021934	1	SHAFT, CONTROL,
13	84021935	1	GEAR,
14	84021936	8	SCREW,
15	84021937	2	BEARING ASSY,
16	84021938	1	NUT, M60x2
17	84021941	1	RING, OIL SCRAPER,
18	84021940	1	O-RING,
19	84021939	1	COVER,
20	120163	6	SCREW, {PP:80120163} Hex Soc Hd, M8 x 25, 8.8, M8x25
21	84023741	1	WASHER, LOCK,
22	84100556	1	WASHER,
23	539448	AR	SHIM, {PP:80539448} THK.: 0.1MM
23	539449	AR	SHIM, {PP:80539449} THK.: 0.3MM
23	539450	AR	PLATE, ADJUSTING, {PP:80539450} THK.: 0.5MM

www.KOBMO.BY

13.08A(01) MAIN DRIVE, GEARBOX - D298

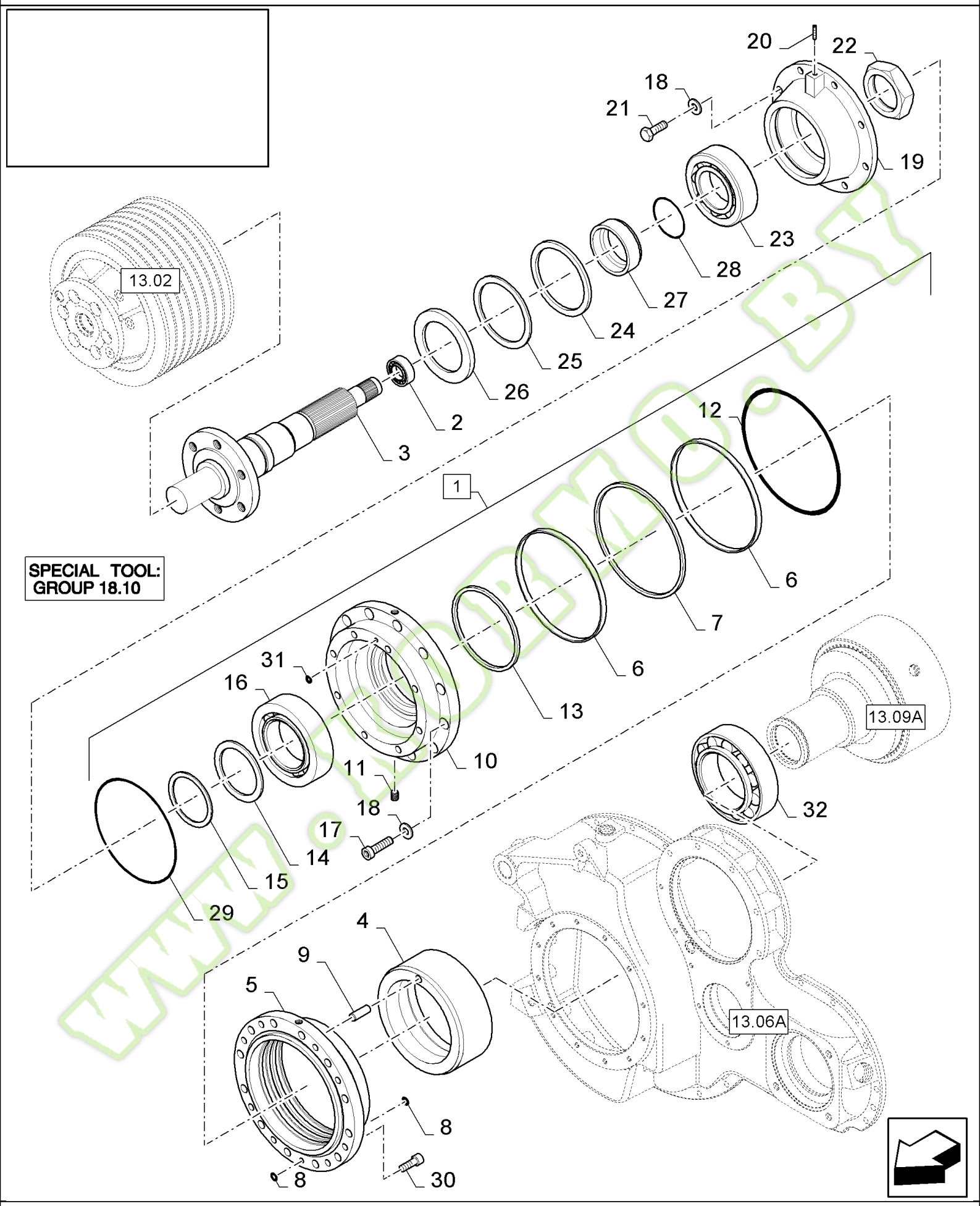

FX50 SELF-PROPELLED FORAGE HARVESTER (10/02-)

13.08A(01) MAIN DRIVE, GEARBOX - D298

Ref	Part Number	Qty	Description
1	84817417	1	CLUTCH, (4 to16, 29 to 32, Inc.fig. 13.09A)
2	84807778	1	BEARING ASSY,
3	84429109	1	SHAFT, CONTROL,
4	84807764	1	PISTON,
5	84807765	1	CYLINDER,
6	84807756	2	RING,
7	84807755	1	SEAL,
8	84443269	2	O-RING,
9	84807763	2	PIN,
10	84807762	1	COVER,
11	84817554	1	PLUG,
12	84807757	1	O-RING,
13	84807758	1	SEAL,
14	84807761	1	RING, LOCKING,
15	370009	1	CIRCLIP, {PP:80370009}
16	9832270	1	BEARING ASSY, {PP:89832270}
17	84443268	12	SCREW, M10x45
18	140028	20	WASHER, {PP:80140028} M10, 10MM
19	84429108	1	CAP,
20	84443267	1	SCREW,
21	43140	8	BOLT, {PP:80043140} Hex, M10 x 30, 8.8, M10x30
22	412387	1	NUT, {PP:80412387}
23	84074503	1	BEARING ASSY,
24	80412270	1	RING, SNAP,
25	84807759	1	WASHER,
26	84443266	1	SEAL,
27	84807760	1	BUSHING,
28	84443264	1	O-RING,
29	84443265	1	O-RING,
30	120052	4	SCREW, {PP:80120052} Hex Soc Hd, M10 x 25, 8.8, M10x25
31	84818593	1	O-RING,
32	412284	1	BEARING ASSY, {PP:80412284}

www.KOBMO.BY

13.09(01) CLUTCH - C297

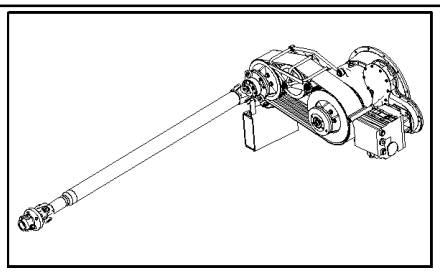

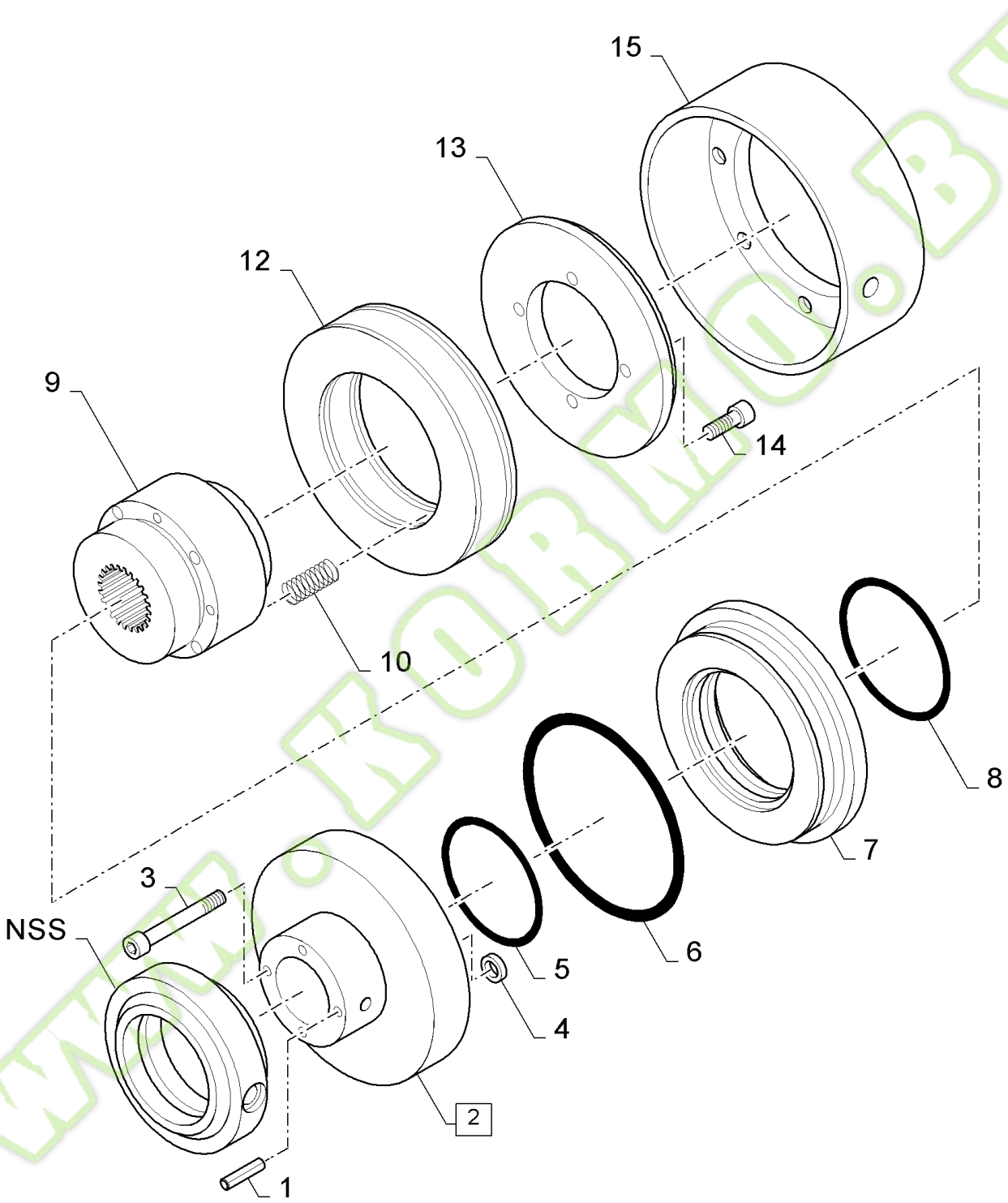

WWW.KOBMOBY

FX50 SELF-PROPELLED FORAGE HARVESTER (10/02-)

13.09(01) CLUTCH - C297

Ref	Part Number	Qty	Description
	84320148	1	CLUTCH, , USE SPECIAL TOOL (84074673) FOR MOUNTING
1	412688	2	PIN, {PP:80412688} M6 x 60, Slotted,
2	84320533	1	HOUSING, (NSS)
3	84023120	11	SCREW, M6x55
4	84023121	1	O-RING,
5	84023122	1	O-RING,
6	84023123	1	O-RING,
7	84023124	1	PLATE, CLUTCH, DRIVING,
8	84023144	1	O-RING,
9	84023143	1	HUB,
10	84023141	16	SPRING,
11	84023140	10	CLUTCH, PRESSURE PLATE,
12	84023730	9	CLUTCH, PRESSURE PLATE,
13	84023731	1	PLATE, CLUTCH, DRIVING,
14	84026103	12	SCREW, M6x16
15	84026104	1	HOUSING,

WWW.KOBMO.BY

13.09A(01) MAIN DRIVE, GEARBOX, CLUTCH - D298

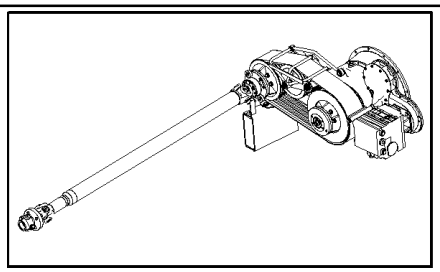

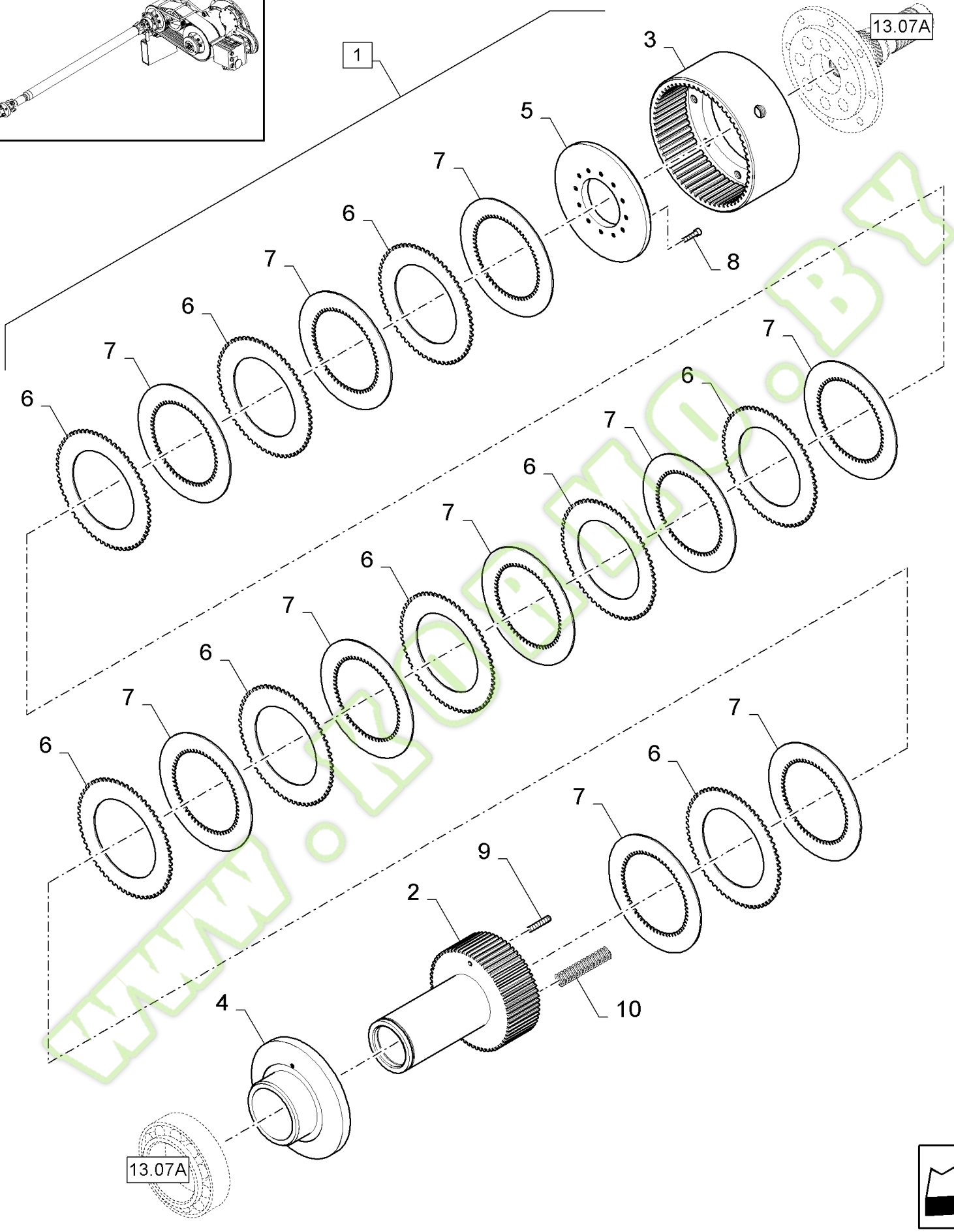

FX50 SELF-PROPELLED FORAGE HARVESTER (10/02-)

13.09A(01) MAIN DRIVE, GEARBOX, CLUTCH - D298

Ref	Part Number	Qty	Description
1	84449391	1	CLUTCH, (2 to 10)
2	84449392	1	HUB,
3	84026104	1	HOUSING,
4	84449393	1	PLATE, CLUTCH, DRIVING,
5	84023731	1	PLATE, CLUTCH, DRIVING,
6	84023730	9	CLUTCH, PRESSURE PLATE,
7	84023140	10	CLUTCH, PRESSURE PLATE,
8	84026103	12	SCREW, M6x16
9	84449394	1	SCREW,
10	84023141	16	SPRING,

www.KOBMO.BY

13.10(01) MAIN DRIVE - BEARINGS SUPPORT

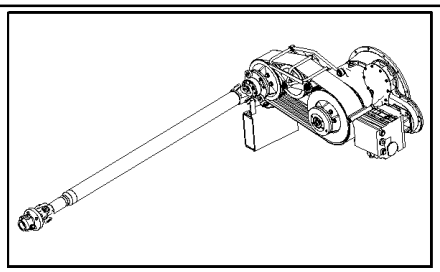

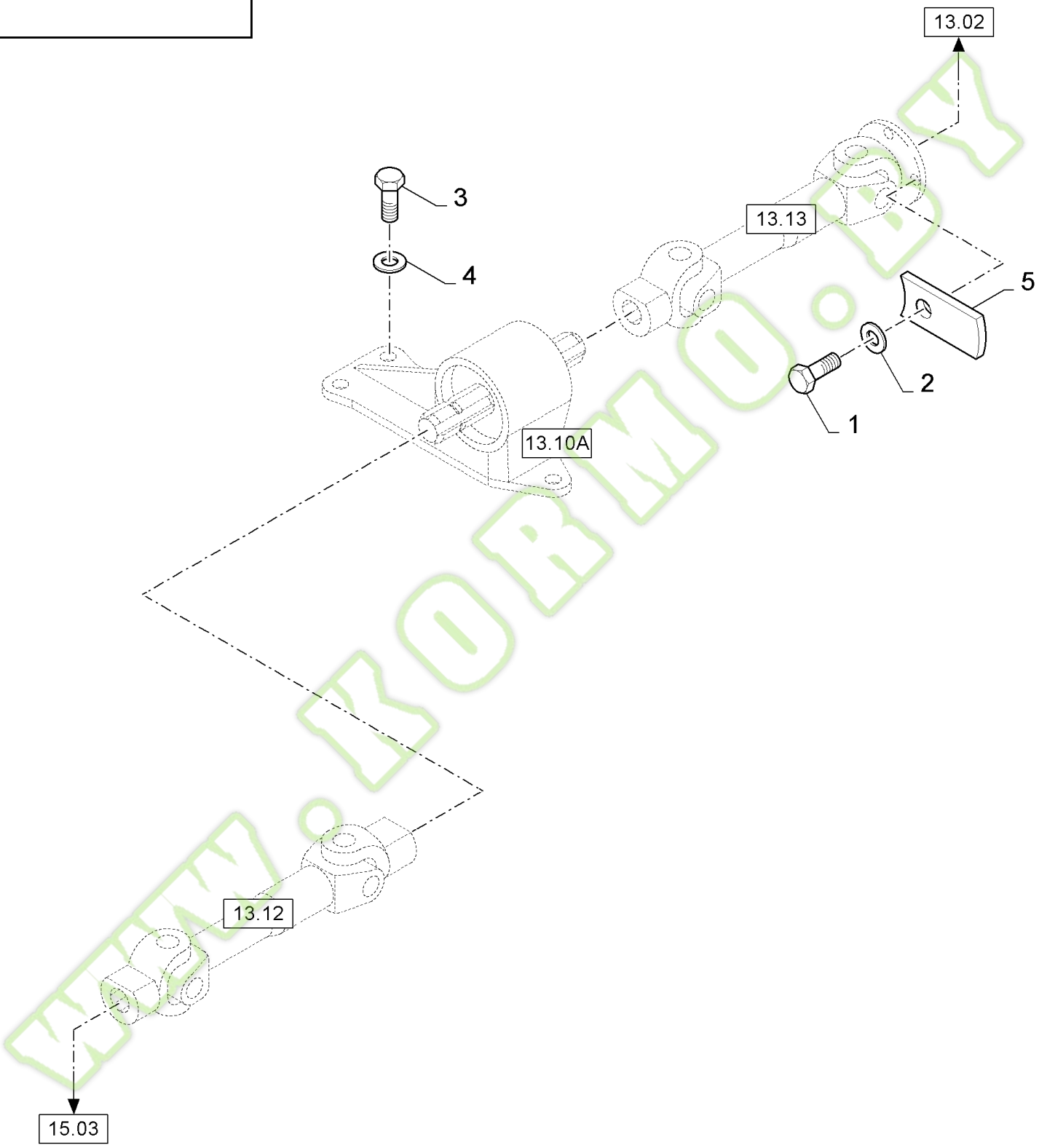

WWW.KOBMO.BY

FX50 SELF-PROPELLED FORAGE HARVESTER (10/02-)

13.10(01) MAIN DRIVE - BEARINGS SUPPORT

Ref	Part Number	Qty	Description
1	43139	4	SCREW, {PP:80043139} Hex, M10 x 25, 8.8, Full Thd, M10x25
2	140045	4	WASHER, LOCK, {PP:80140045} Belleville, M10, 10MM
3	120090	2	SCREW, {PP:80120090} Hex, M16 x 50, 8.8, Hex, M16 x 50, 8.8
4	140020	1	WASHER, {PP:80140020} M16 x 30 x 3, 16MM
5	84441864	2	PAWL,

WWW.KOBMO.BY

13.10A(01) MAIN DRIVE - BEARINGS SUPPORT

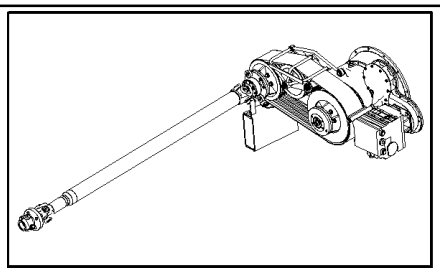

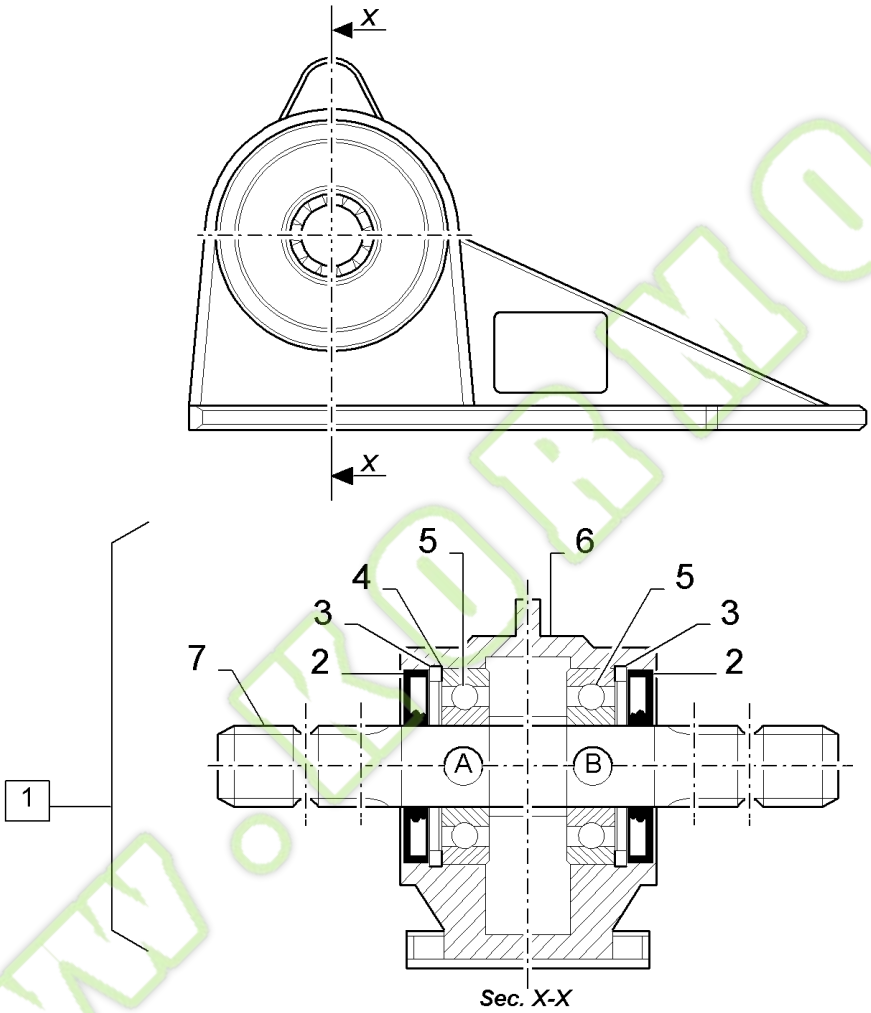

www.KOBMO.BY

FX50 SELF-PROPELLED FORAGE HARVESTER (10/02-)

13.10A(01) MAIN DRIVE - BEARINGS SUPPORT

Ref	Part Number	Qty	Description
1	84442408	1	BLOCK, CONNECTING, (2 to 7)
2	84814786	2	RING, OIL SCRAPER,
3	84446717	2	RING, LOCKING,
4	84814797	1	SHIM, SET
5	84446795	2	BEARING ASSY,
6	84446793	1	CASING,
7	84814785	1	SHAFT,

WWW.KOBMO.BY

13.11(01) HIGH BLOWER SPEED, DRIVE

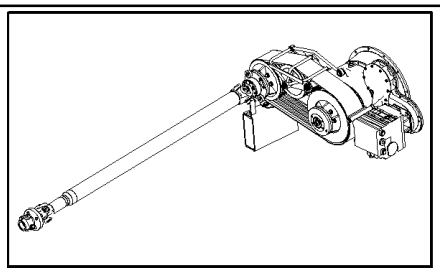

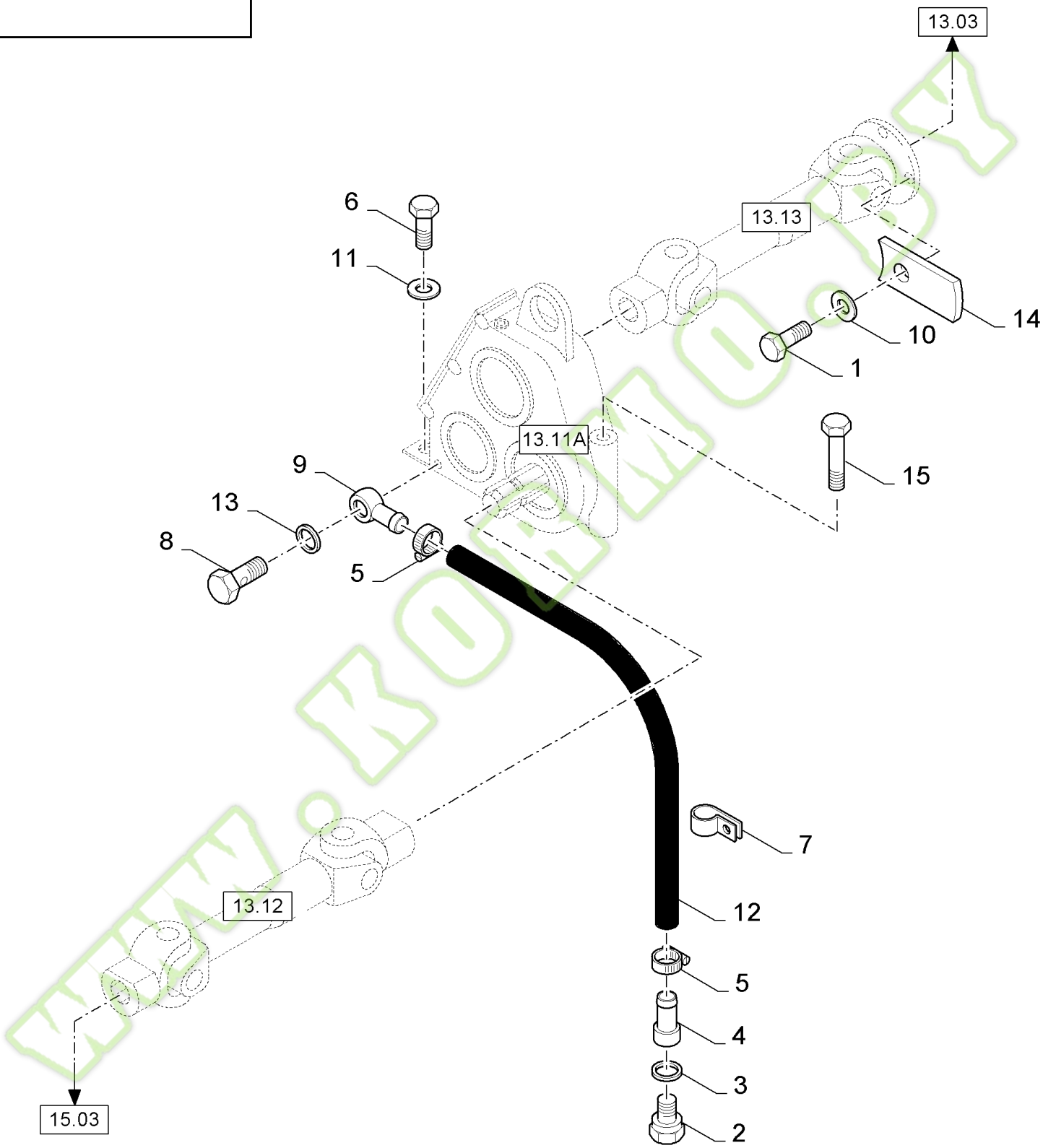

FX50 SELF-PROPELLED FORAGE HARVESTER (10/02-)

13.11(01) HIGH BLOWER SPEED, DRIVE

Ref	Part Number	Qty	Description
1	43139	4	SCREW, {PP:80043139} Hex, M10 x 25, 8.8, Full Thd, M10x25
2	150060	1	PLUG, {PP:80150060}
3	220122	2	GASKET, {PP:80220122}
4	80326079	1	CONNECTOR, HYD.,
5	326082	2	CLAMP, {PP:80326082}
6	120090	2	SCREW, {PP:80120090} Hex, M16 x 50, 8.8, Hex, M16 x 50, 8.8
7	9511662	1	CLAMP, {PP:89511662}
8	84100235	1	SCREW, HOLLOW,
9	80326078	1	CONNECTOR, HYD.,
10	140045	4	WASHER, LOCK, {PP:80140045} Belleville, M10, 10MM
11	140020	3	WASHER, {PP:80140020} M16 x 30 x 3, 16MM
12	84058932	1	HOSE, L=2M
13	84038227	2	GASKET,
14	84441864	2	PAWL,
15	86508585	1	SCREW, Hex, M16 x 190, 8.8, M16x190

www.KOBMO.BY

13.11A(01) HIGH BLOWER SPEED, DRIVE, 27T/33T - C269

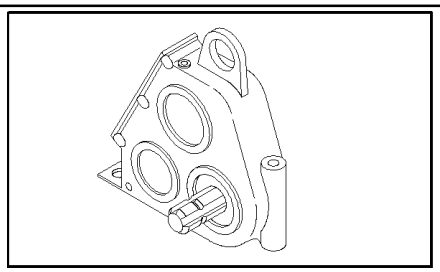

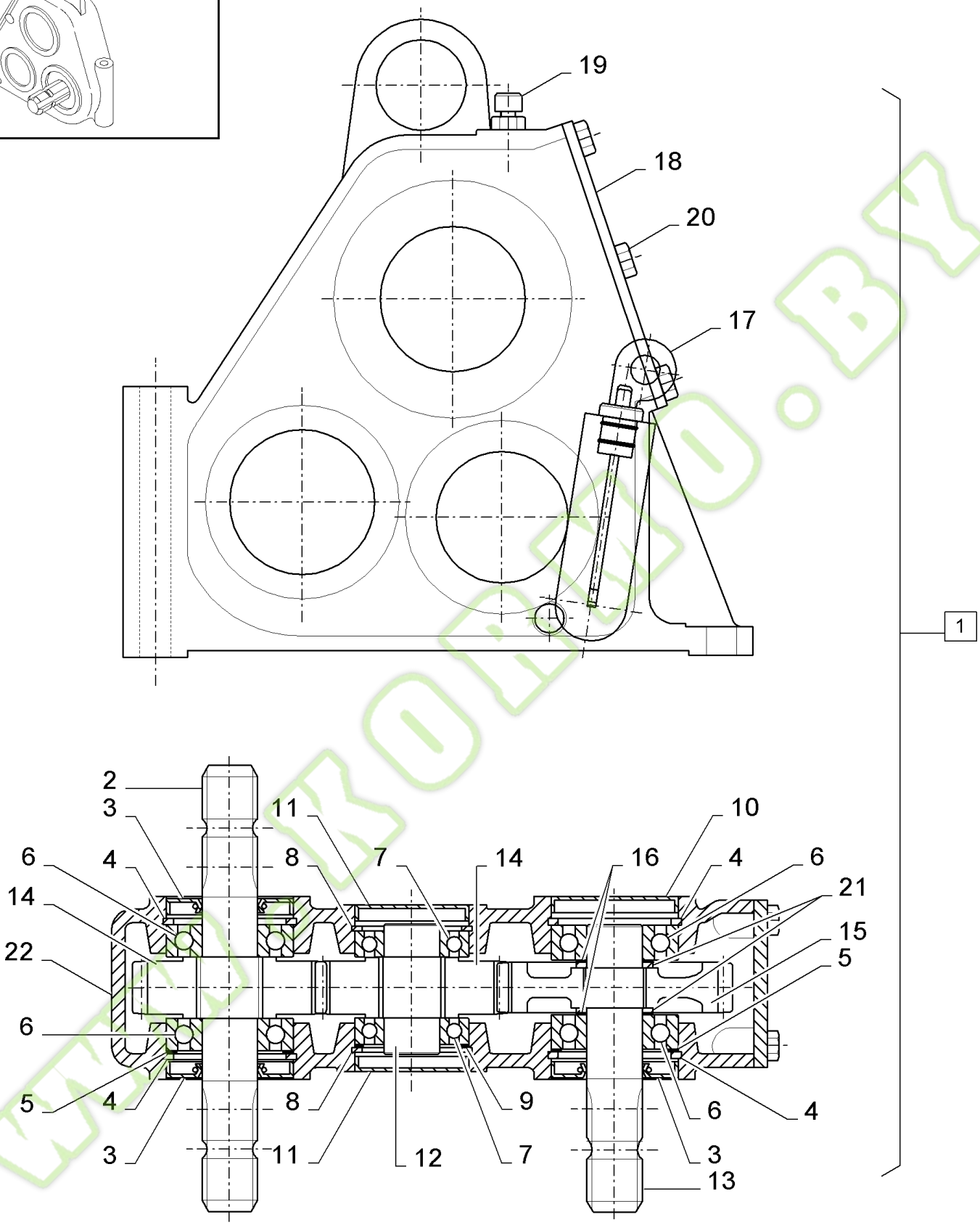

FX50 SELF-PROPELLED FORAGE HARVESTER (10/02-)

13.11A(01) HIGH BLOWER SPEED, DRIVE, 27T/33T - C269

Ref	Part Number	Qty	Description
1	84442502	1	GEARBOX,
2	84814785	1	SHAFT,
3	84814786	3	RING, OIL SCRAPER,
4	80300633	4	RING, SNAP,
5	84814797	3	SHIM,
6	80210048	4	BEARING ASSY,
7	84441185	2	BEARING ASSY,
8	84819109	2	CIRCLIP,
9	84814787	1	SHIM,
10	84814798	1	COVER,
11	84814799	2	COVER,
12	84814788	1	SHAFT,
13	84814789	1	SHAFT,
14	87374320	2	GEAR, Z27, 8 splines
15	84814791	1	GEAR, Z33
16	84814792	2	SHIM,
17	84814793	1	INDICATOR,
18	84814794	1	COVER,
19	84814795	1	VENT,
20	43139	6	SCREW, {PP:80043139} Hex, M10 x 25, 8.8, Full Thd, M10x25
21	84814796	2	SHIM,
22	84814784	1	HOUSING,

www.KOBMO.BY

13.11B(01) HIGH BLOWER SPEED, DRIVE, 28T/31T - D270

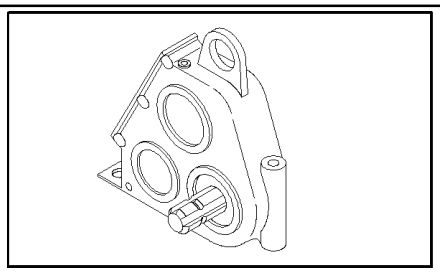

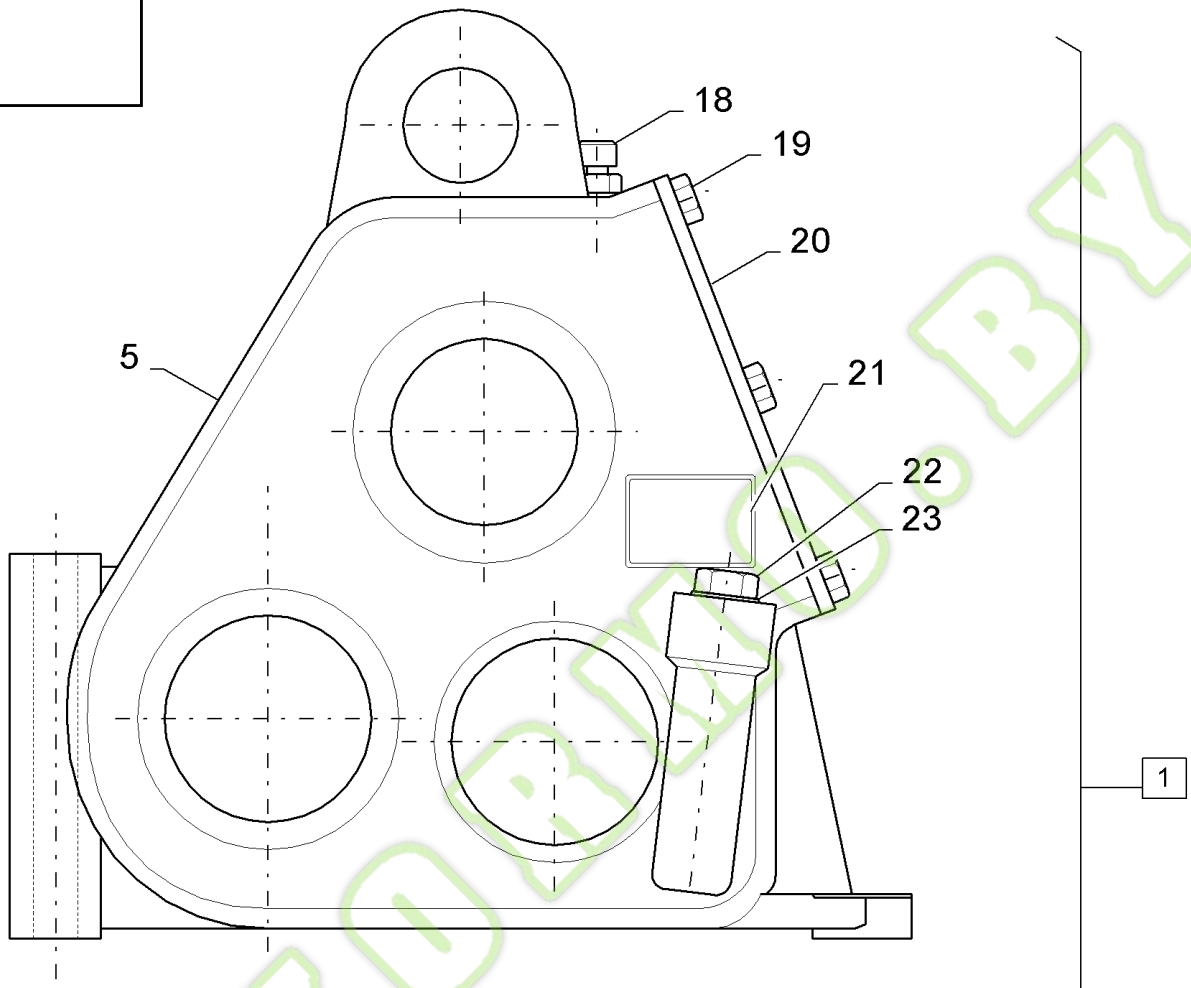

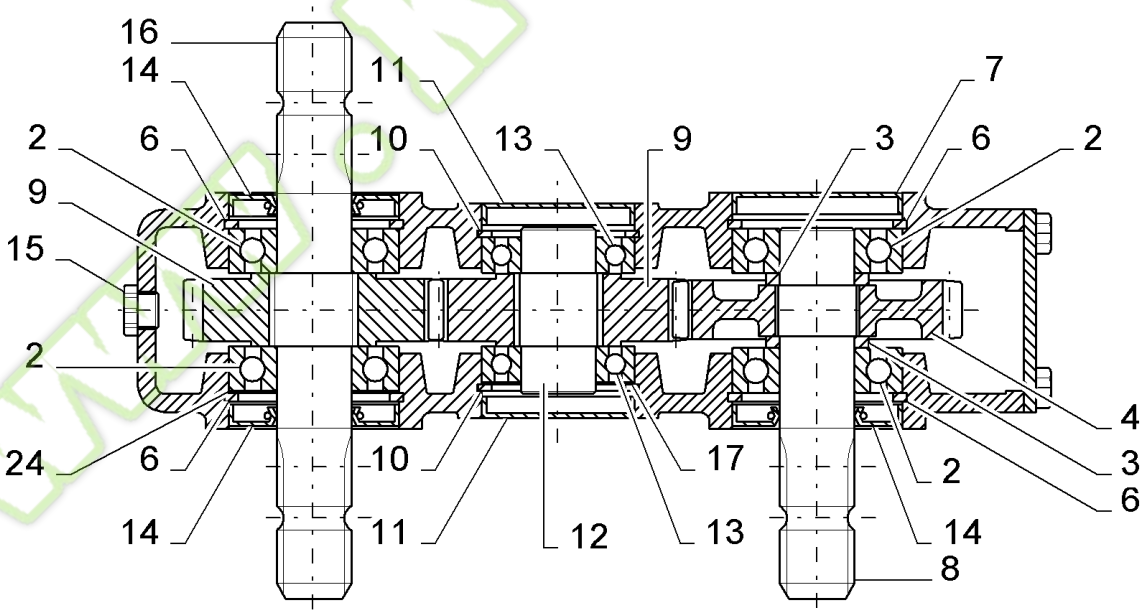

WWW.KOBUTO.BY

FX50 SELF-PROPELLED FORAGE HARVESTER (10/02-)

13.11B(01) HIGH BLOWER SPEED, DRIVE, 28T/31T - D270

Ref	Part Number	Qty	Description
1	84446156	1	GEARBOX, (2 to 24)
2	84447158	4	BEARING ASSY,
3	84446790	2	SPACER,
4	84447159	1	GEAR, Z=31
5	84447157	1	CASING,
6	84446717	4	RING, LOCKING,
7	84814798	1	COVER,
8	84814789	1	SHAFT,
9	84447160	2	GEAR, Z=28
10	84819109	2	CIRCLIP,
11	84814799	2	COVER,
12	84814788	1	SHAFT,
13	84441185	2	BEARING ASSY,
14	84814786	3	RING, OIL SCRAPER,
15	NS	1	NOT SERVICED, M18x35
16	84814785	1	SHAFT,
17	84100769	1	SHIM,
18	84447161	1	PLUG,
19	43138	6	SCREW, {PP:80043138} Hex, M10 x 20, 8.8, Full Thd, M10x20
20	84814794	1	COVER,
21	84446730	1	PLATE,
22	84446789	1	PLUG,
23	84446788	1	RING, LOCKING,
24	84814797	1	SHIM,

www.KOBMO.BY

13.12(01) POWER TAKE-OFF

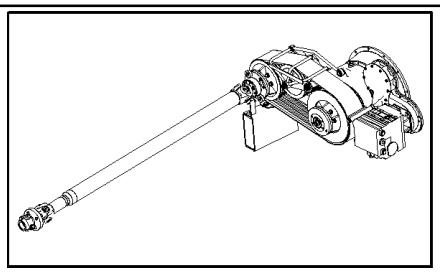

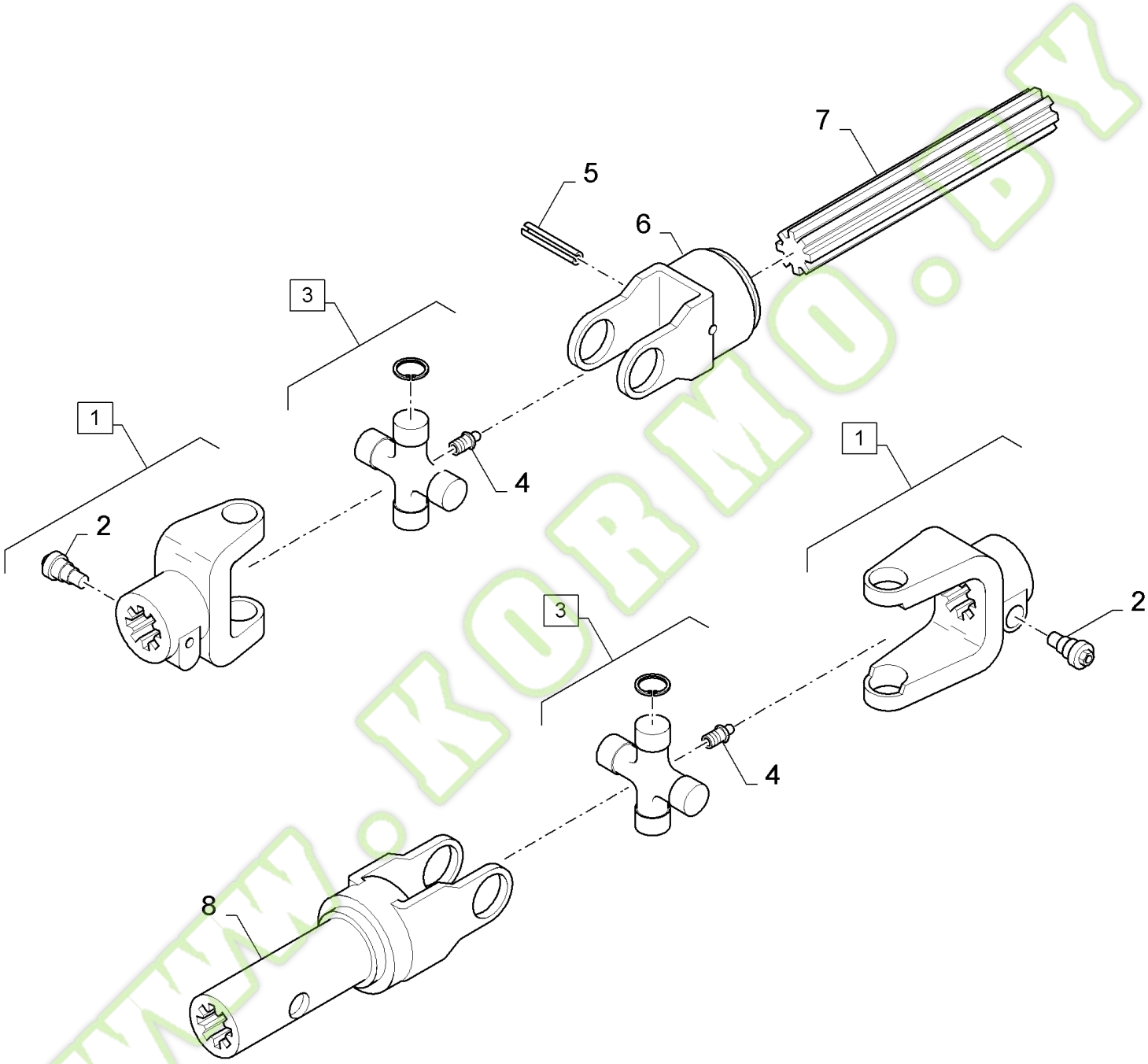

www.KOBMO.BY

13.12(01) POWER TAKE-OFF

Ref	Part Number	Qty	Description
	89833474	1	SHAFT, PTO, (1 to 8)
	84031180	1	SHAFT, PTO, (1 to 7), INNER
	84031181	1	SHAFT, PTO, (1,3,8), OUTER
	84031182	1	YOKE, (5 to 7)
1	84031171	2	YOKE, (2)
2	84031172	2	PIN, LOCK,
3	84031174	2	SPIDER, (4)
4	150024	2	NIPPLE, LUBE, {PP:80150024}
5	440437	1	PIN, ROLL, {PP:80440437} M10 x 80 Slotted,
6	84031176	1	YOKE,
7	84031183	1	SPINDLE,
8	84031184	1	YOKE,

www.KOBMO.BY

13.13(01) POWER TAKE-OFF

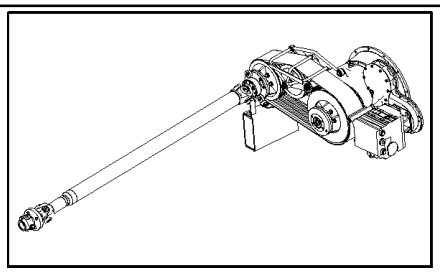

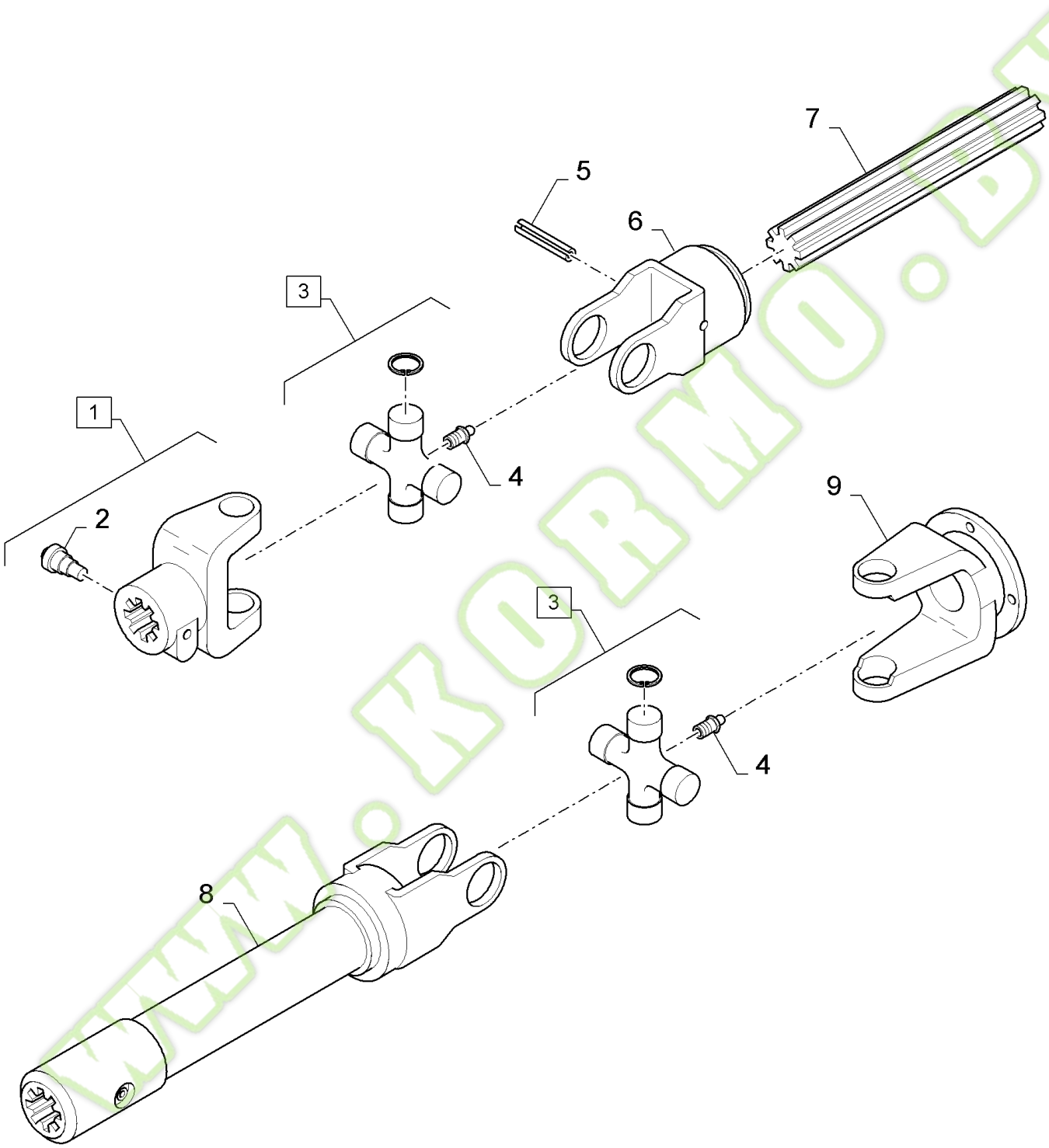

www.KOBMO.BY

13.13(01) POWER TAKE-OFF

Ref	Part Number	Qty	Description
	89833476	1	SHAFT, PTO, (1 to 9)
	84031169	1	SHAFT, PTO, (1 to 7)
	84031170	1	SHAFT, PTO, (3,8,9)
	84031175	1	YOKE, (5 to 7)
1	84031171	1	YOKE, (2)
2	84031172	1	PIN, LOCK,
3	84031174	2	SPIDER, (4)
4	150024	2	NIPPLE, LUBE, {PP:80150024}
5	440437	1	PIN, ROLL, {PP:80440437} M10 x 80 Slotted,
6	84031176	1	YOKE,
7	84031177	1	SHAFT,
8	84031178	1	YOKE,
9	84031173	1	YOKE,

www.KOBMO.BY

13.51(01) FRAME UPPER FEEDROLLS, LH

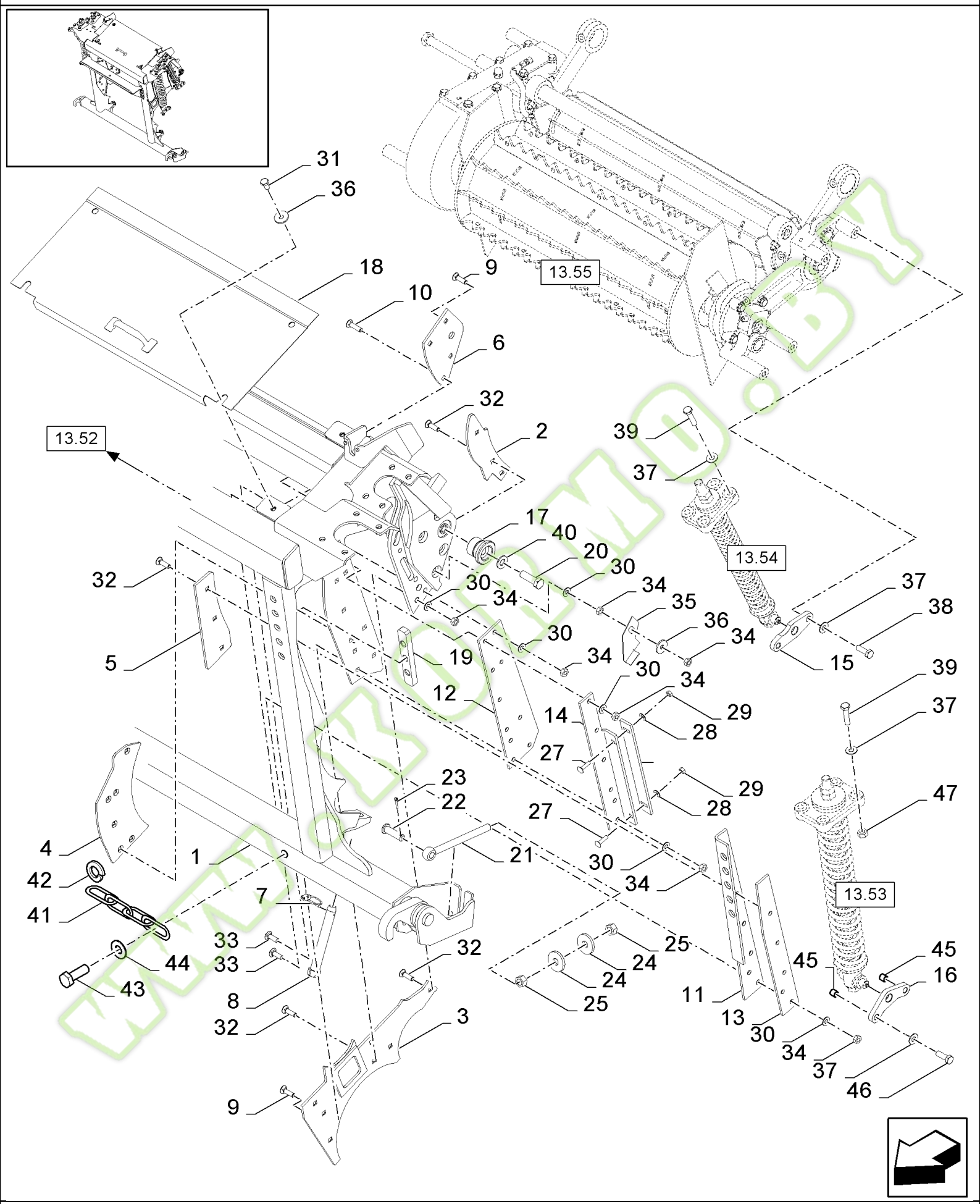

FX50 SELF-PROPELLED FORAGE HARVESTER (10/02-)

13.51(01) FRAME UPPER FEEDROLLS, LH

Ref	Part Number	Qty	Description
1	84443139	1	FRAME,
2	84099356	1	PLATE, WEAR,
3	84098847	1	PLATE, WEAR, , BSN C269
3	84446175	1	PLATE, WEAR, , ASN D270
4	84099357	1	PLATE, WEAR,
5	84098837	1	PLATE, WEAR,
6	84443169	1	PLATE, WEAR,
7	9832679	1	PIN, SPLIT (COTTER), {PP:89832679}
8	84026700	1	PIN,
9	84443703	AR	BOLT, M10x25
10	84443518	1	BOLT,
11	84099428	1	PLATE,
12	84099469	1	PLATE,
13	84099470	1	PLATE,
14	84099468	1	PLATE,
15	84099476	1	SUPPORT,
16	84099477	1	SUPPORT,
17	84054846	1	BUSHING,
18	84099478	1	COVER,
19	84446150	1	PLATE,
20	120090	1	SCREW, {PP:80120090} Hex, M16 x 50, 8.8, Hex, M16 x 50, 8.8
21	84817718	1	BOLT, BANJO,
22	362528	1	PIN, {PP:80362528}
23	130007	1	PIN, SPLIT (COTTER), {PP:80130007} M4 x 25,
24	84005115	2	WASHER,
25	100020	2	NUT, {PP:80100020} M16, Cl 8, M16, Cl 8
26	84446144	1	PLATE,
27	120038	2	BOLT, {PP:80120038} Short NK, M8 x 30, Cl8.8, Full Thd, M8x30
28	322358	2	WASHER, LOCK, {PP:80322358} Belleville, M8, 8MM
29	89706690	2	NUT, CL 8, M8 x 1.25 x 13.0
30	140045	AR	WASHER, LOCK, {PP:80140045} Belleville, M10, 10MM
31	43140	4	BOLT, {PP:80043140} Hex, M10 x 30, 8.8, M10x30
32	84018214	AR	BOLT, M10x35
33	86512446	2	BOLT, Short NK, M10 x 30, Cl8.8, Full Thd, M10x30
34	100016	AR	NUT, {PP:80100016} M10, Cl 8, M10
35	84442853	1	PLATE,
36	140042	4	WASHER, LOCK, {PP:80140042} M10 x 34 x 3, 10MM
37	140046	AR	WASHER, LOCK, {PP:80140046} Belleville, M12, 12MM
38	300389	6	SCREW, {PP:80300389} Hex, M12 x 35, 8.8, Full Thd, M12x35
39	9706702	AR	SCREW, {PP:89706702} Hex, M12 x 50, 8.8, M12x50
40	140048	1	WASHER, LOCK, {PP:80140048} Belleville, M16, 16MM
41	84448119	1	CHAIN (AGRICULTURE), , BSN C269
42	84448120	1	RING, , BSN C269
43	86508568	AR	SCREW, Hex, M6 x 16, 8.8, M6x16
44	322357	AR	WASHER, LOCK, {PP:80322357} Belleville, M6, Belleville, M6

CLUB-BOBMO.BY

13.51(01) FRAME UPPER FEEDROLLS, LH

Ref	Part Number	Qty	Description
45	84444773	2	SPACER, , BSN C277
46	89628065	2	SCREW, M12x45, BSN C277
47	89706685	8	NUT, M12

www.KOBMO.BY

13.52(01) FRAME UPPER FEEDROLLS, RH

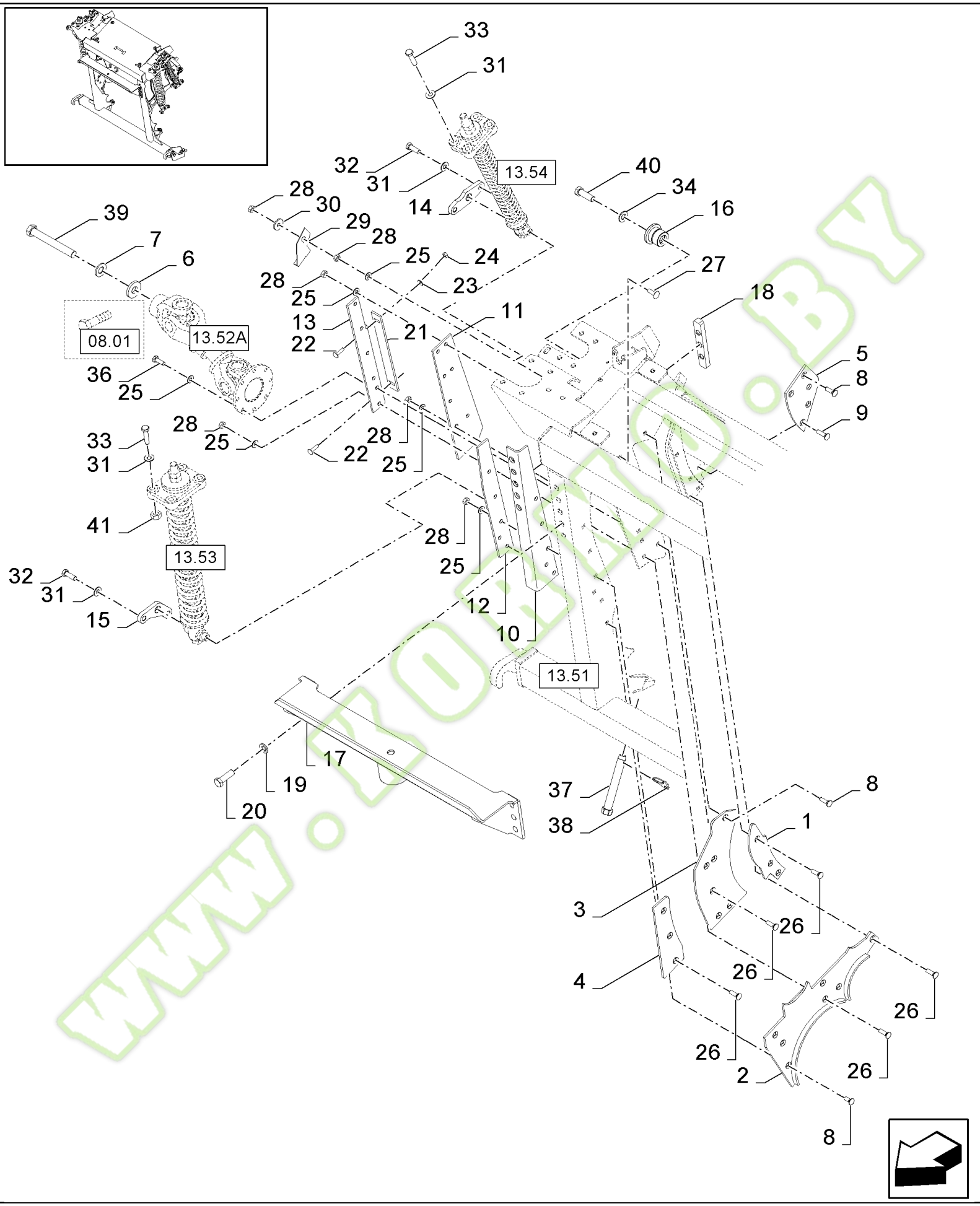

FX50 SELF-PROPELLED FORAGE HARVESTER (10/02-)

13.52(01) FRAME UPPER FEEDROLLS, RH

Ref	Part Number	Qty	Description
1	84098839	1	PLATE, WEAR,
2	84098846	1	PLATE, WEAR, , BSN C269
2	84446177	1	PLATE, WEAR, , ASN D270
3	84098840	1	PLATE, WEAR,
4	84098841	1	PLATE, WEAR,
5	84099474	1	PLATE, WEAR,
6	86592703	1	WASHER, M20 x 50 x 6, HT, 20MM
7	322359	1	WASHER, LOCK, {PP:80322359} Belleville, M20, 20MM
8	84443703	AR	BOLT, M10x25
9	84443518	1	BOLT,
10	84099472	1	PLATE,
11	84099469	1	PLATE,
12	84099470	1	PLATE,
13	84099471	1	PLATE,
14	84099476	1	SUPPORT,
15	84099477	2	SUPPORT,
16	84054846	1	BUSHING,
17	84098851	1	SUPPORT,
18	84446150	1	PLATE,
19	140021	6	WASHER, {PP:80140021} M20 x 37 x 3, 20MM
20	9847023	6	SCREW, {PP:89847023} Hex, M20 x 50, 8.8, M20x50
21	84446144	1	PLATE,
22	120038	2	BOLT, {PP:80120038} Short NK, M8 x 30, Cl8.8, Full Thd, M8x30
23	322358	2	WASHER, LOCK, {PP:80322358} Belleville, M8, 8MM
24	89706690	2	NUT, CL 8, M8 x 1.25 x 13.0
25	140045	AR	WASHER, LOCK, {PP:80140045} Belleville, M10, 10MM
26	84018214	AR	BOLT, M10x35
27	86512446	2	BOLT, Short NK, M10 x 30, Cl8.8, Full Thd, M10x30
28	100016	AR	NUT, {PP:80100016} M10, Cl 8, M10
29	84442853	1	PLATE,
30	140042	2	WASHER, LOCK, {PP:80140042} M10 x 34 x 3, 10MM
31	140046	AR	WASHER, LOCK, {PP:80140046} Belleville, M12, 12MM
32	300389	8	SCREW, {PP:80300389} Hex, M12 x 35, 8.8, Full Thd, M12x35
33	9706702	AR	SCREW, {PP:89706702} Hex, M12 x 50, 8.8, M12x50
34	140048	1	WASHER, LOCK, {PP:80140048} Belleville, M16, 16MM
36	43140	8	BOLT, {PP:80043140} Hex, M10 x 30, 8.8, M10x30
37	84026700	1	PIN,
38	9832679	1	PIN, SPLIT (COTTER), {PP:89832679}
39	84444625	1	SCREW, Hex, M20 x 170, 8.8, M20x170
40	120090	1	SCREW, {PP:80120090} Hex, M16 x 50, 8.8, Hex, M16 x 50, 8.8
41	89706685	8	NUT, M12

CMD.TECHMO.BY

13.52A(01) POWER TAKE-OFF - UPPER FEEDROLLS

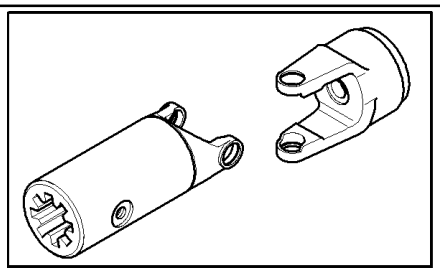

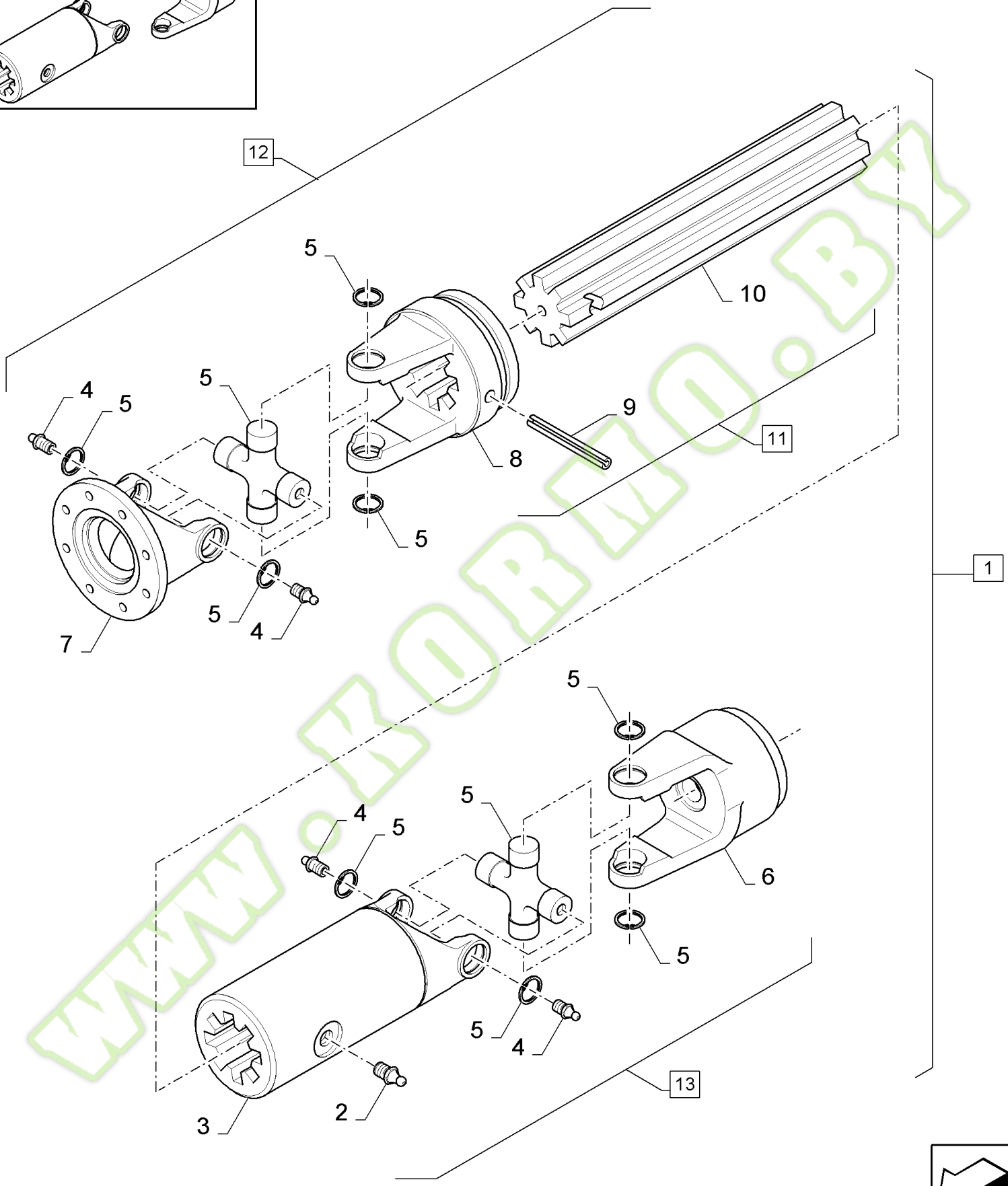

www.KOBMO.BY

FX50 SELF-PROPELLED FORAGE HARVESTER (10/02-)

13.52A(01) POWER TAKE-OFF - UPPER FEEDROLLS

Ref	Part Number	Qty	Description
1	84054957	1	SHAFT, PTO,
2	300919	1	NIPPLE, LUBE, {PP:80300919}
3	84817827	1	YOKE,
4	750236	4	NIPPLE, LUBE, {PP:80750236}
5	84817828	2	SPIDER,
6	84817829	1	YOKE,
7	84817830	1	YOKE,
8	84817831	1	YOKE,
9	80053427	1	PIN, SPLIT (COTTER),
10	84817832	1	SHAFT,
11	84817833	1	SHAFT, (8 to 10)
12	84817834	1	SHAFT, PTO, (4,5,7,11)
13	84817826	1	SHAFT, PTO, (2 to 6)

www.KOBMO.BY

13.53(01) UPPER FEEDROLLS, SPRING ASSEMBLY, FRONT

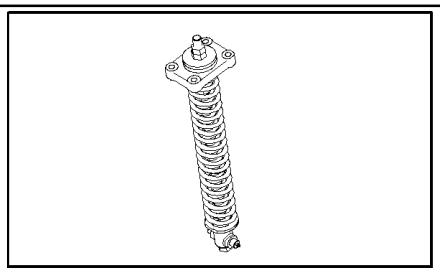

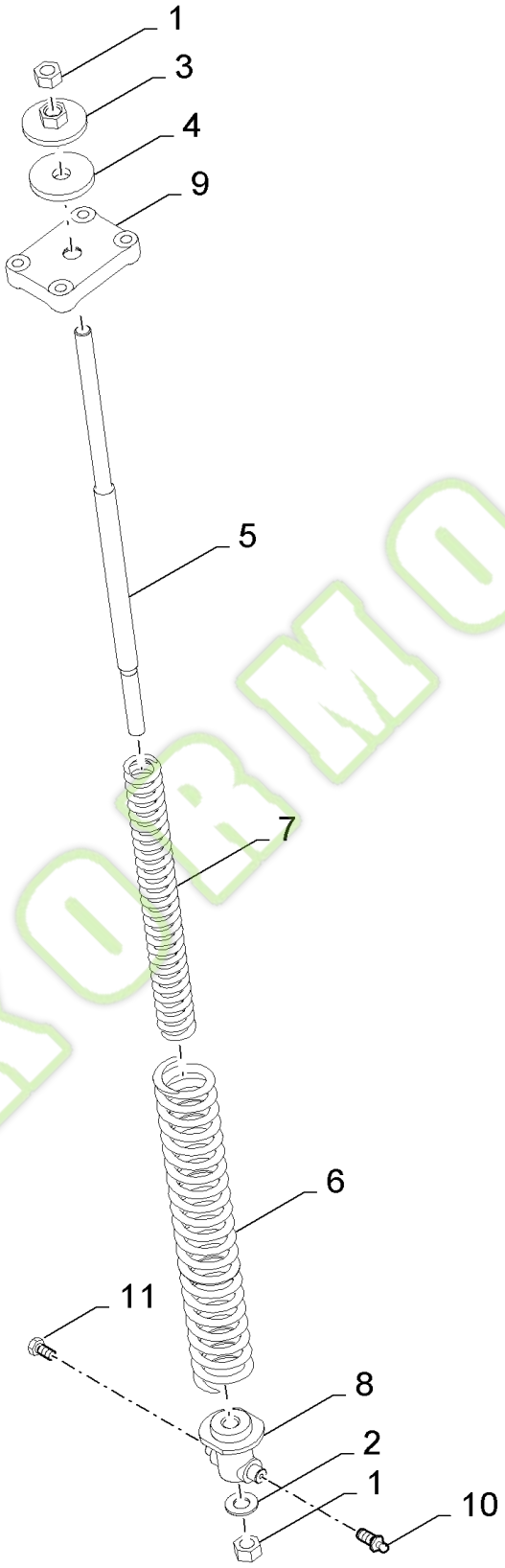

www.KOBMO.BY

FX50 SELF-PROPELLED FORAGE HARVESTER (10/02-)

13.53(01) UPPER FEEDROLLS, SPRING ASSEMBLY, FRONT

Ref	Part Number	Qty	Description
1	100085	4	NUT, {PP:80100085} M20 x 1.5, Cl 8,
2	322359	2	WASHER, LOCK, {PP:80322359} Belleville, M20, 20MM
3	84446148	2	RING,
4	84097897	2	RING, RUBBER,
5	84099424	2	BAR,
6	84099426	2	SPRING,
7	84099427	2	SPRING,
8	84443135	2	SUPPORT,
9	84442849	2	BLOCK, CONNECTING,
10	321204	2	NIPPLE, LUBE, {PP:80321204}
11	84012755	2	SCREW, Hex Soc, M6 x 5,

WWW.KOBMO.BY

13.54(01) UPPER FEEDROLLS, SPRING ASSEMBLY, REAR

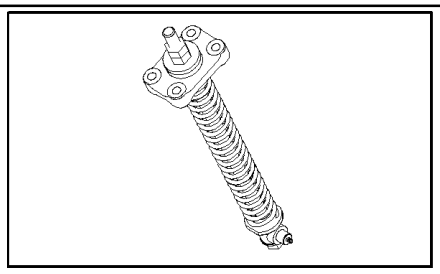

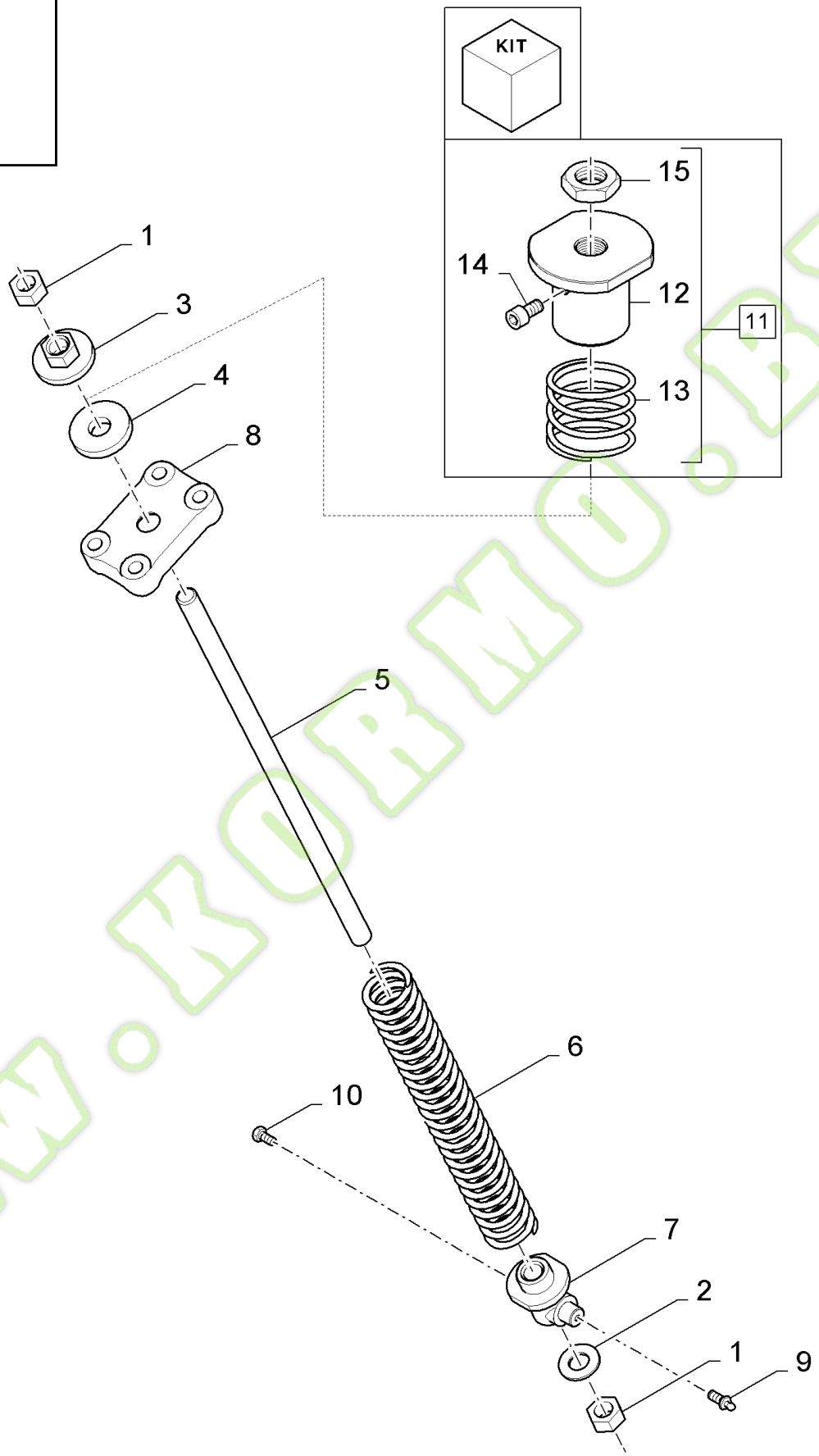

www.KOBMO.BY

FX50 SELF-PROPELLED FORAGE HARVESTER (10/02-)

13.54(01) UPPER FEEDROLLS, SPRING ASSEMBLY, REAR

Ref	Part Number	Qty	Description
1	100085	4	NUT, {PP:80100085} M20 x 1.5, Cl 8,
2	322359	2	WASHER, LOCK, {PP:80322359} Belleville, M20, 20MM
3	84446146	2	RING,
4	84442872	2	RING, RUBBER,
5	84099423	2	BAR,
6	84099425	2	SPRING,
7	84443133	2	SUPPORT,
8	84442850	2	BLOCK, CONNECTING,
9	321204	2	NIPPLE, LUBE, {PP:80321204}
10	84012755	2	SCREW, Hex Soc, M6 x 5,
11	84452543	1	SHOCK ABSORBER, (12 to 15), SHOCK ABSORBER KIT
12	84452496	1	BUSHING, , SHOCK ABSORBER KIT
13	84452497	1	SPRING, , SHOCK ABSORBER KIT
14	412697	1	SCREW, {PP:80412697} Hex Soc Hd, M8 x 12, 8.8, , SHOCK ABSORBER KIT
15	84036420	1	NUT, , SHOCK ABSORBER KIT

www.KOBMO.BY

13.55(01) UPPER FEEDROLLS, LH

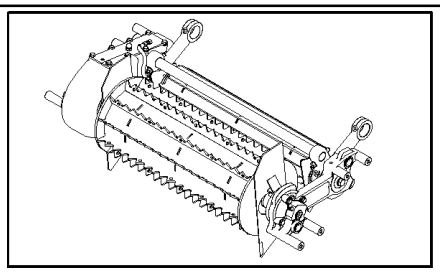

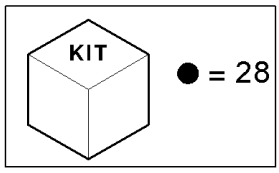

1
22
26
7
6
5
20
4
10
12
11
8
4
5
4
3
16
27
23
17
24
14
25
15
18
13
19
9
27
13.56
2
21

HEAVY DUTY KIT

28
29
31
30

WWW.KUBITO.BY

FX50 SELF-PROPELLED FORAGE HARVESTER (10/02-)

13.55(01) UPPER FEEDROLLS, LH

Ref	Part Number	Qty	Description
1	84436134	1	ROLLER, FEED,
2	84436148	1	ROLLER,
3	84099413	1	SPACER,
4	330284	3	RING, {PP:80330284}
5	84007335	2	BEARING ASSY,
6	84443164	1	SEAL,
7	84438417	1	FLANGE,
8	84438414	1	HOUSING, BEARING, RH - Includes (2) 210088
9	84443138	1	HOUSING, BEARING, Includes (2) Ref. 27
10	84099414	1	SPACER,
11	84442867	1	SPACER,
12	370021	1	CIRCLIP, {PP:80370021} M85 x 3, Int,
13	220020	1	RING, OIL SCRAPER, {PP:80220020}
14	327910	1	BEARING ASSY, {PP:80327910}
15	327911	1	CIRCLIP, {PP:80327911}
16	84099415	1	FLANGE,
17	84443163	1	SEAL,
18	140045	AR	WASHER, LOCK, {PP:80140045} Belleville, M10,
19	120071	4	SCREW, {PP:80120071} Hex, M10 x 65, 8.8,
20	84099422	6	SCREW, Hex Soc Flat Hd, M8 x 16, 8.8,
21	84444771	1	KNIFE, LH
22	84099416	1	KNIFE, LH
23	84054943	1	WASHER,
24	140048	1	WASHER, LOCK, {PP:80140048} Belleville, M16,
25	120090	1	SCREW, {PP:80120090} Hex, M16 x 50, 8.8,
26	89993154	4	CLAMP,
27	84054849	2	BUSHING,
28	84436147	1	DIA KIT, HARVESTER, (29 to 31), HEAVY DUTY KIT
29	84436157	10	PLATE, , HEAVY DUTY KIT
30	84056909	50	BOLT, Hex, Lock, M10 x 25, M10x50, HEAVY DUTY KIT
31	84099499	50	NUT, M10, Cl 8.8, M10, HEAVY DUTY KIT

www.RUBMO.BY

13.56(01) UPPER FEEDROLLS, RH

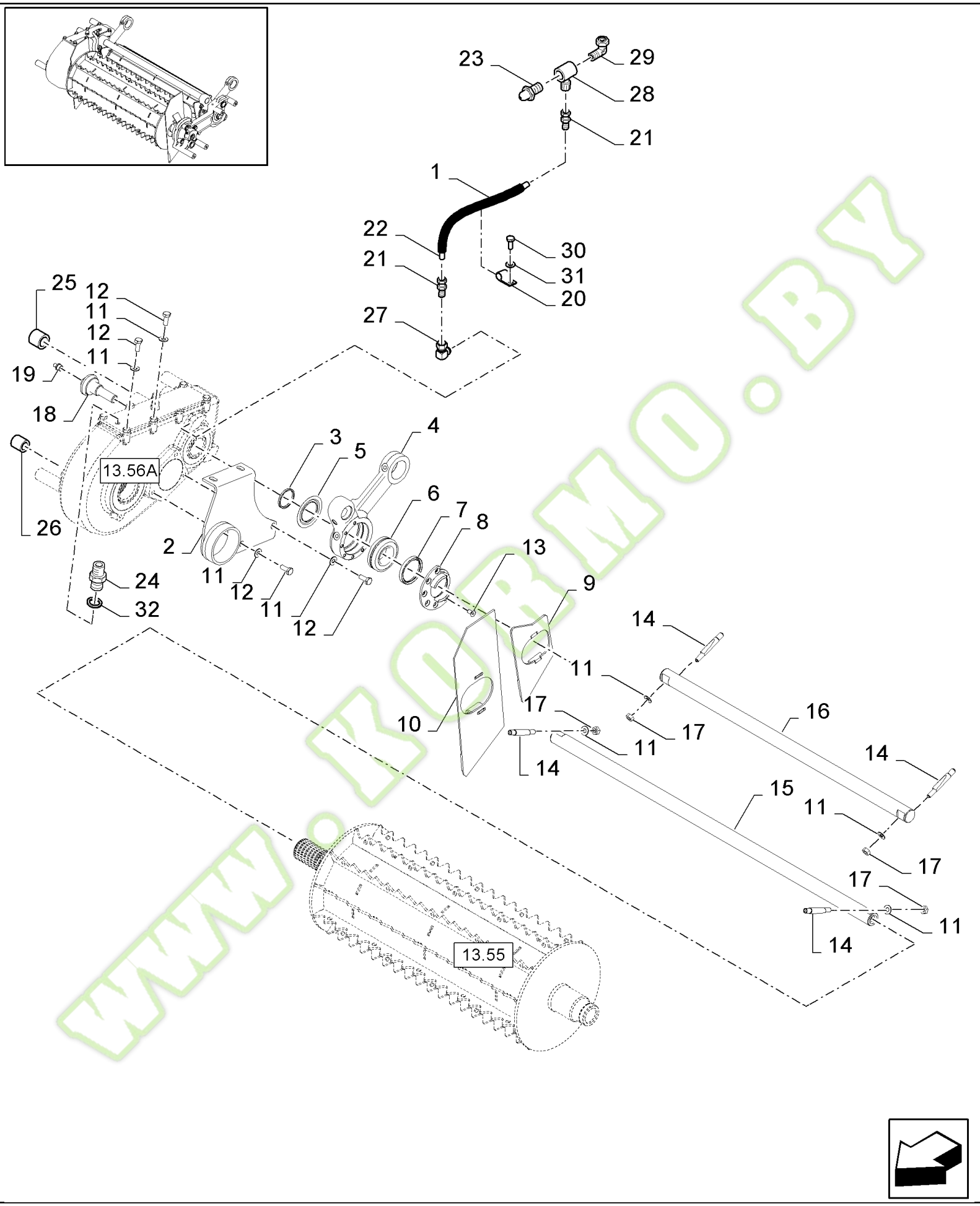

www.KOBMO.BY

FX50 SELF-PROPELLED FORAGE HARVESTER (10/02-)

13.56(01) UPPER FEEDROLLS, RH

Ref	Part Number	Qty	Description
1	NS	1	NOT SERVICED, SHEET
2	84099412	1	SUPPORT,
3	84099413	1	SPACER,
4	84438411	1	HOUSING, BEARING, LH
5	330284	1	RING, {PP:80330284}
6	84007335	1	BEARING ASSY,
7	84443164	1	SEAL,
8	84438417	1	FLANGE,
9	84099419	1	KNIFE, RH
10	84444770	1	KNIFE, RH
11	140045	AR	WASHER, LOCK, {PP:80140045} Belleville, M10, 10MM
12	43139	4	SCREW, {PP:80043139} Hex, M10 x 25, 8.8, Full Thd, M10x25
13	84099422	6	SCREW, Hex Soc Flat Hd, M8 x 16, 8.8,
14	84989980	4	STUD,
15	84442454	1	SHAFT,
16	84443149	1	SHAFT,
17	100016	4	NUT, {PP:80100016} M10, Cl 8, M10
18	84443162	1	BOLT,
19	9838669	1	NIPPLE, LUBE, {PP:89838669}
20	9503928	2	CLAMP, {PP:89503928}
21	84037349	4	CONNECTOR, HYD.,
22	84053532	2	TUBE,
23	9838669	3	NIPPLE, LUBE, {PP:89838669}
24	84058860	1	SENSOR, SPEED
25	84054849	1	BUSHING, , BSN C277
26	84444772	1	BUSHING, , BSN C277
27	84819212	2	CONNECTOR, HYD.,
28	84042354	2	CONNECTION, 3 WAY,
29	84037391	2	ELBOW,
30	120100	2	BOLT, {PP:80120100} Hex, M6 x 20, 8.8, M6x20
31	322357	2	WASHER, LOCK, {PP:80322357} Belleville, M6, Belleville, M6
32	355607	1	RING, {PP:80355607} , ASN D298

WWW.KOBMO.BY

13.56A(01) UPPER FEEDROLLS, GEARBOX

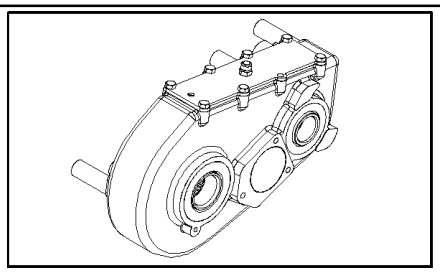

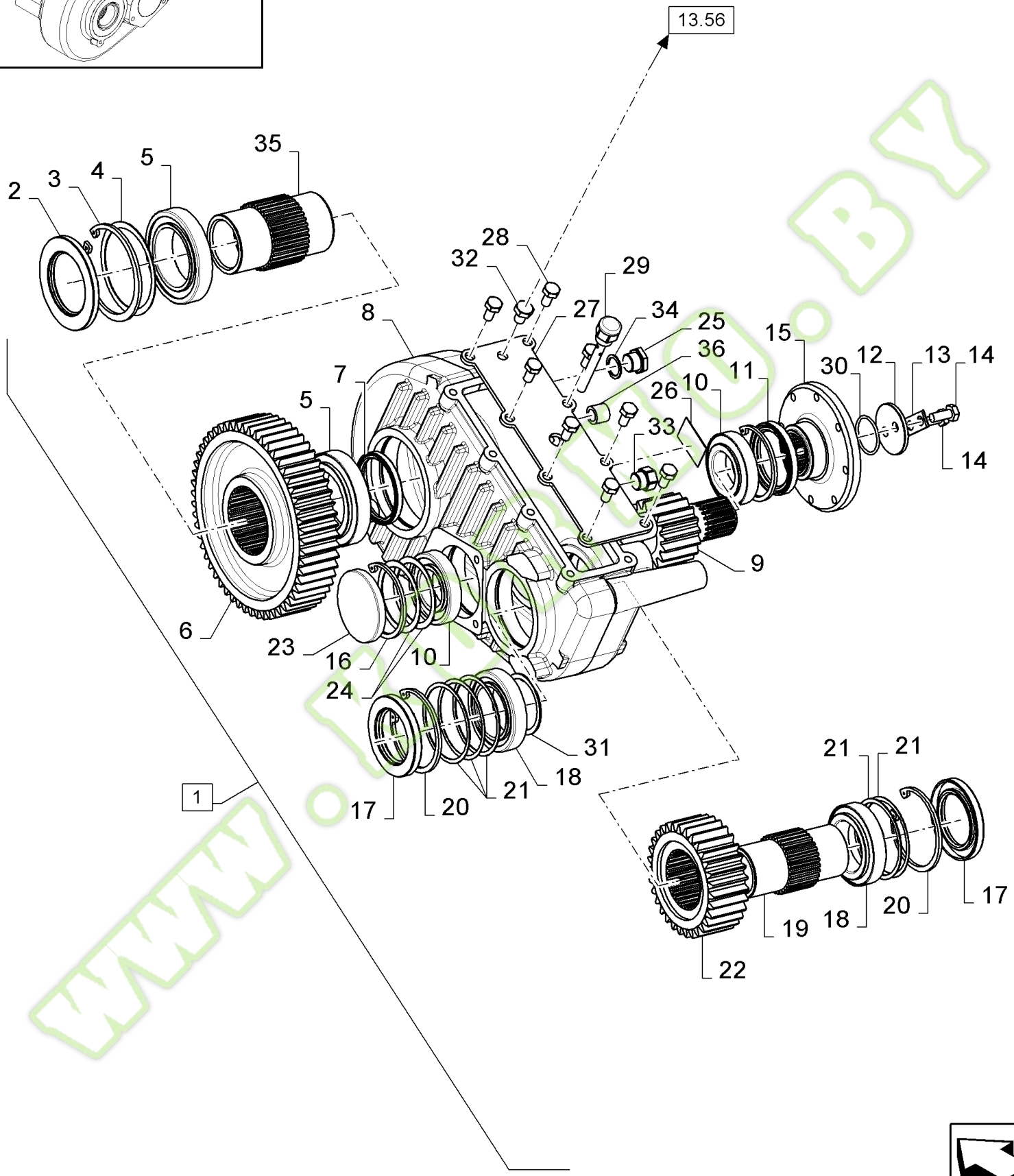

FX50 SELF-PROPELLED FORAGE HARVESTER (10/02-)

13.56A(01) UPPER FEEDROLLS, GEARBOX

Ref	Part Number	Qty	Description
1	84443142	1	GEARBOX, (2 to 35)
2	84817153	1	SEAL, OIL,
3	301652	1	RING, SNAP, {PP:80301652}
4	84447166	1	KIT, SHIM,
5	84446772	2	BEARING ASSY,
6	84446773	1	GEAR, Z=55
7	84817152	1	ELEMENT, SEALING,
8	84819372	1	CASING, , BSN C269
8	84458472	1	CASING, , ASN D270
9	84446774	1	SHAFT,
10	84819201	2	BEARING ASSY,
11	84817151	1	ELEMENT, SEALING,
12	84446775	1	SPACER,
13	84446776	1	PLATE, LOCKING,
14	43139	2	SCREW, {PP:80043139} Hex, M10 x 25, 8.8, Full Thd, M10x25
15	84446777	1	FLANGE,
16	920018136	2	CIRCLIP,
17	84817154	2	ELEMENT, SEALING,
18	84446778	2	BEARING ASSY,
19	84446779	1	SLEEVE,
20	84446780	2	RING, SNAP,
21	84447167	5	SHIM,
22	84446781	1	GEAR, Z=31
23	84446721	1	COVER, CAP,
24	84053921	2	SHIM,
25	84446731	1	PLUG,
26	84446730	1	PLATE,
27	84446782	1	COVER,
28	43138	8	SCREW, {PP:80043138} Hex, M10 x 20, 8.8, Full Thd,
29	84446783	1	PLUG,
30	84817156	1	O-RING,
31	84100769	1	SHIM,
32	NS	1	NOT SERVICED,
33	84320005	1	PLUG,
34	84446735	1	RING, LOCKING,
35	84446771	1	SLEEVE,
36	84054849	2	BUSHING,

WWW.KOBMO.BY

13.57(01) CUTTERDRUM SHAFT, LH

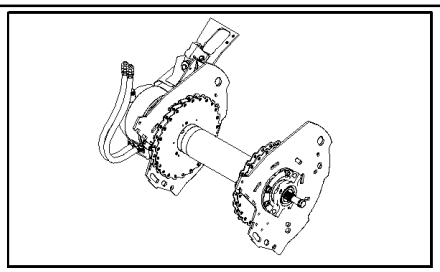

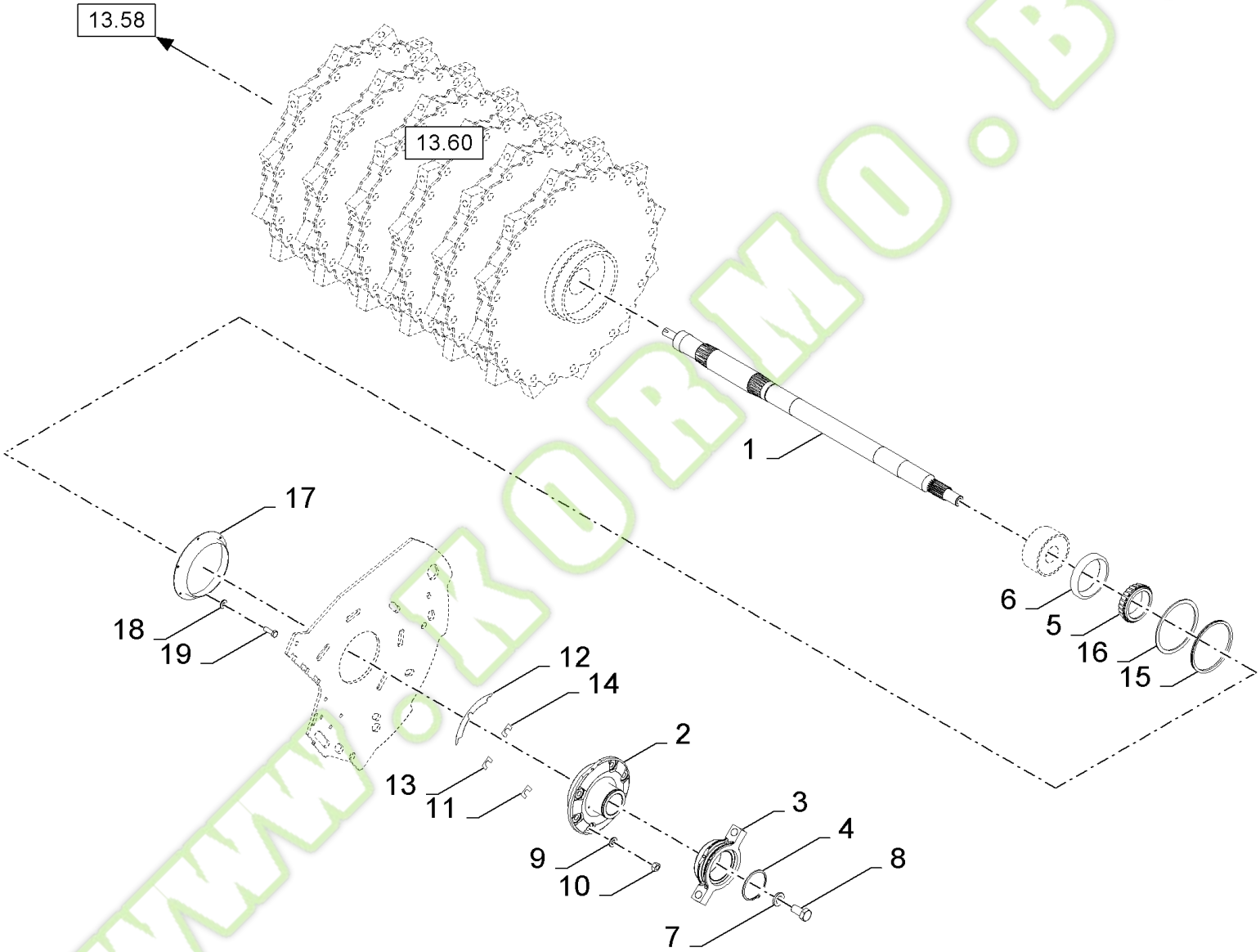

www.KOBMO.BY

FX50 SELF-PROPELLED FORAGE HARVESTER (10/02-)

13.57(01) CUTTERDRUM SHAFT, LH

Ref	Part Number	Qty	Description
1	84012001	1	SHAFT,
2	84073181	1	HOUSING, BEARING,
3	84056356	1	SUPPORT,
4	370010	1	CIRCLIP, {PP:80370010}
5	572266	1	BEARING, CONE, {PP:80572266}
6	572265	1	BEARING, CUP, {PP:80572265}
7	84015771	1	WASHER,
8	84015757	1	BOLT, Hex, M24 x 40, 8.8, Full Thd, M24x45
9	140048	6	WASHER, LOCK, {PP:80140048} Belleville, M16, 16MM
10	100020	6	NUT, {PP:80100020} M16, Cl 8, M16, Cl 8
11	84022135	1	PLATE, ADJUSTING, THK:0.3MM
12	84022136	1	PLATE, ADJUSTING, THK:0.25MM
13	84022134	1	PLATE, ADJUSTING, THK:0.15MM
14	84022133	1	PLATE, ADJUSTING, THK:0.1MM
15	84068420	1	RING,
16	84078822	1	RING,
17	84043080	1	COVER,
18	322357	6	WASHER, LOCK, {PP:80322357} Belleville, M6, Belleville, M6
19	120100	6	BOLT, {PP:80120100} Hex, M6 x 20, 8.8, M6x20

WWW.KOBMO.BY

13.58(01) CUTTERDRUM SHAFT, RH

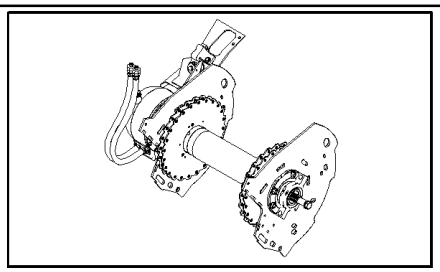

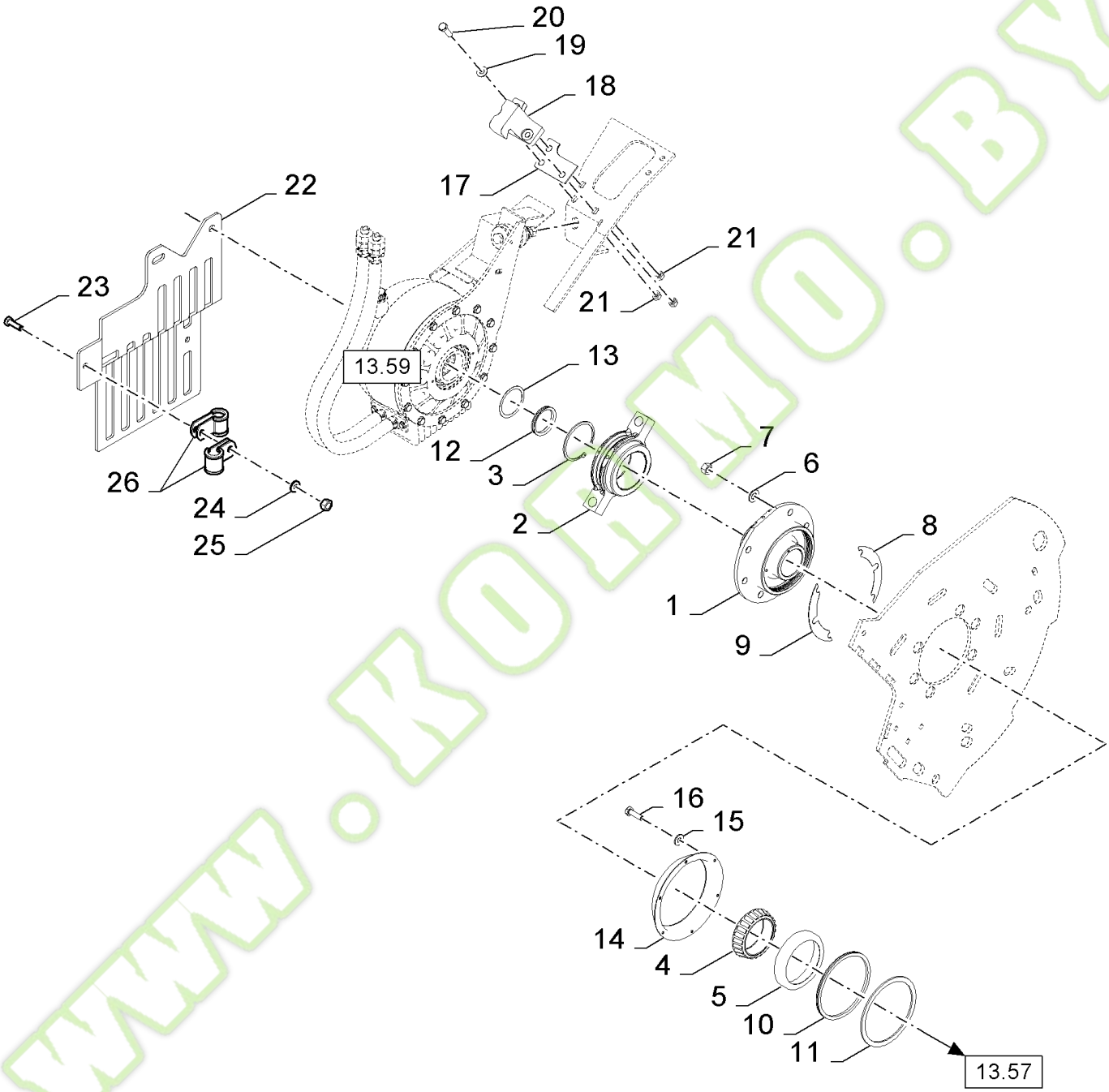

www.KOEMO.BY

FX50 SELF-PROPELLED FORAGE HARVESTER (10/02-)

13.58(01) CUTTERDRUM SHAFT, RH

Ref	Part Number	Qty	Description
1	84073181	1	HOUSING, BEARING,
2	84056356	1	SUPPORT,
3	370010	1	CIRCLIP, {PP:80370010}
4	572266	1	BEARING, CONE, {PP:80572266}
5	572265	1	BEARING, CUP, {PP:80572265}
6	140048	6	WASHER, LOCK, {PP:80140048} Belleville, M16, 16MM
7	100020	6	NUT, {PP:80100020} M16, Cl 8, M16, Cl 8
8	84022137	1	PLATE, ADJUSTING, THK:0.5MM
9	84022138	1	PLATE, ADJUSTING,
10	84068420	1	RING,
11	84078822	1	RING,
12	84068419	1	RING,
13	84068394	1	SHIM, THK:0.5MM
14	84043080	1	COVER,
15	322357	6	WASHER, LOCK, {PP:80322357} Belleville, M6, Belleville, M6
16	120100	6	BOLT, {PP:80120100} Hex, M6 x 20, 8.8, M6x20
17	84432298	1	SHIM,
18	84817678	1	HOOK,
19	140046	3	WASHER, LOCK, {PP:80140046} Belleville, M12, 12MM
20	86629541	3	BOLT, Hex, M12 x 40, 8.8, Full Thd, M12x40
21	89706685	3	NUT, M12
22	84448102	1	SUPPORT, , BSN C325
22	84453201	1	SUPPORT, , ASN D326
23	43128	4	SCREW, {PP:80043128} Hex, M8 x 30, 8.8, M8x30
24	322358	4	WASHER, LOCK, {PP:80322358} Belleville, M8,
25	89706690	4	NUT, M8
26	86628564	AR	CLAMP,

www.KOBMO.BY

13.59(01) CUTTERDRUM GEARBOX

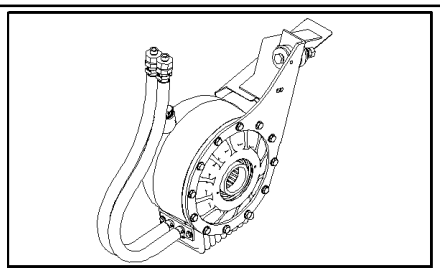

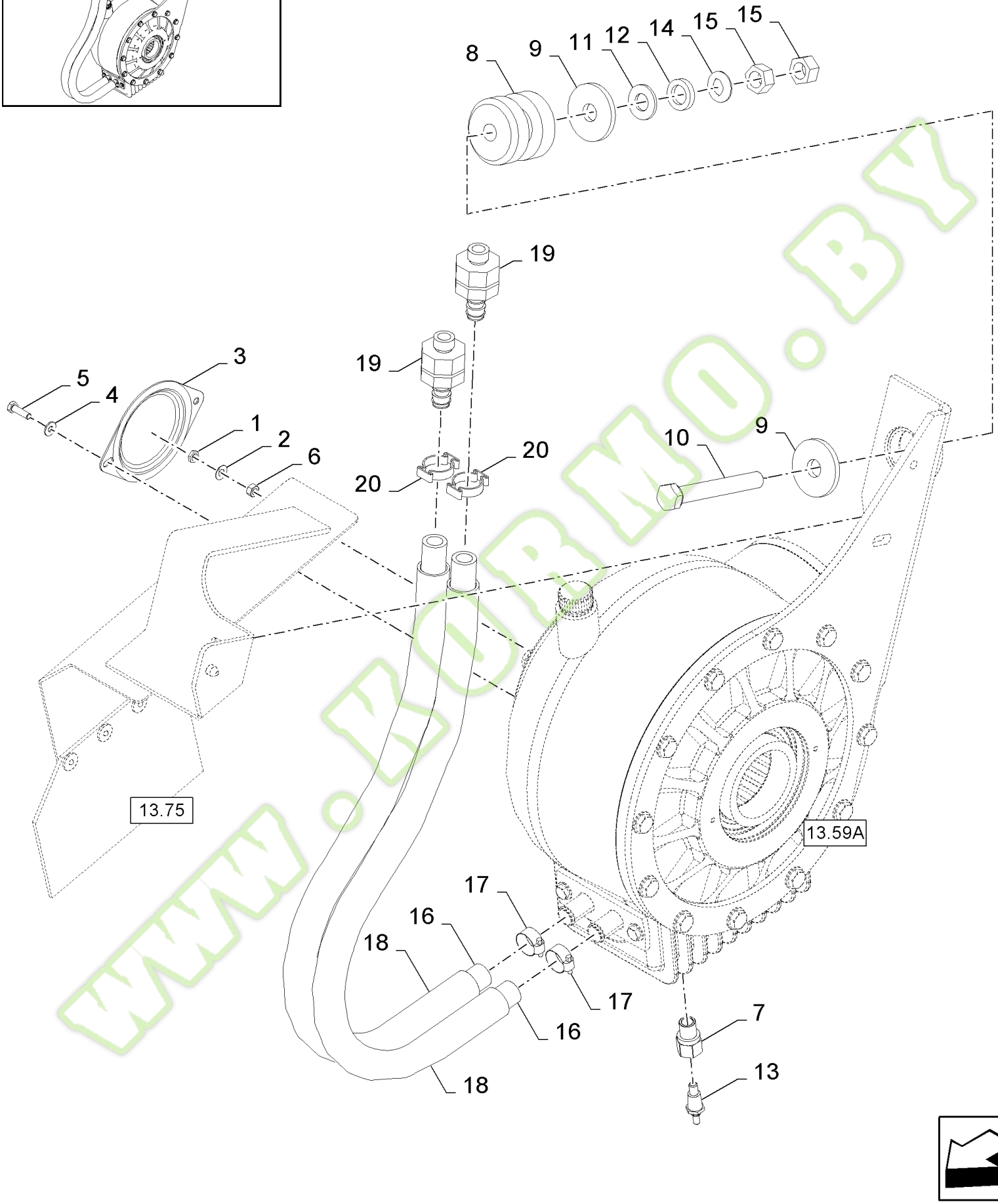

www.RORMO.BY

FX50 SELF-PROPELLED FORAGE HARVESTER (10/02-)

13.59(01) CUTTERDRUM GEARBOX

Ref	Part Number	Qty	Description
1	100033	1	NUT, {PP:80100033} Thin, M24 x 1.5, Cl 04, M10
2	84022885	1	RING,
3	84019821	1	COVER,
4	322357	2	WASHER, LOCK, {PP:80322357} Belleville, M6, Belleville, M6
5	120100	2	BOLT, {PP:80120100} Hex, M6 x 20, 8.8, M6x20
6	100024	1	NUT, {PP:80100024} M24 x 1.5, Cl 8,
7	87628	1	BUSHING, {PP:80087628}
8	632436	1	DAMPER, {PP:80632436}
9	337522	2	WASHER, LOCK, {PP:80337522} M16 x 56 x 5,
10	43281	1	SCREW, {PP:80043281} Hex, M16 x 120, 10.9, M16x20
11	378246	1	WASHER, {PP:80378246} M16
12	84053239	1	RING,
13	84015885	1	SWITCH, THERMOSTATIC,
14	84053238	1	WASHER,
15	100020	2	NUT, {PP:80100020} M16, Cl 8, M16, Cl 8
16	84447962	2	HOSE,
17	326082	2	CLAMP, {PP:80326082}
18	NS	2	NOT SERVICED, HOSE
19	84607509	2	COUPLING, QUICK, MALE,
20	84038324	2	CLAMP,

www.KOBMO.BY

13.59A(01) GEARBOX

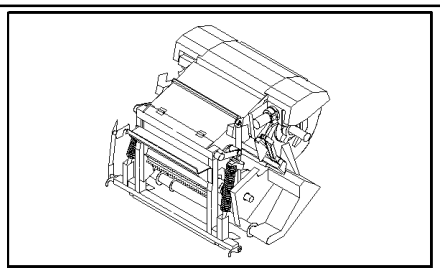

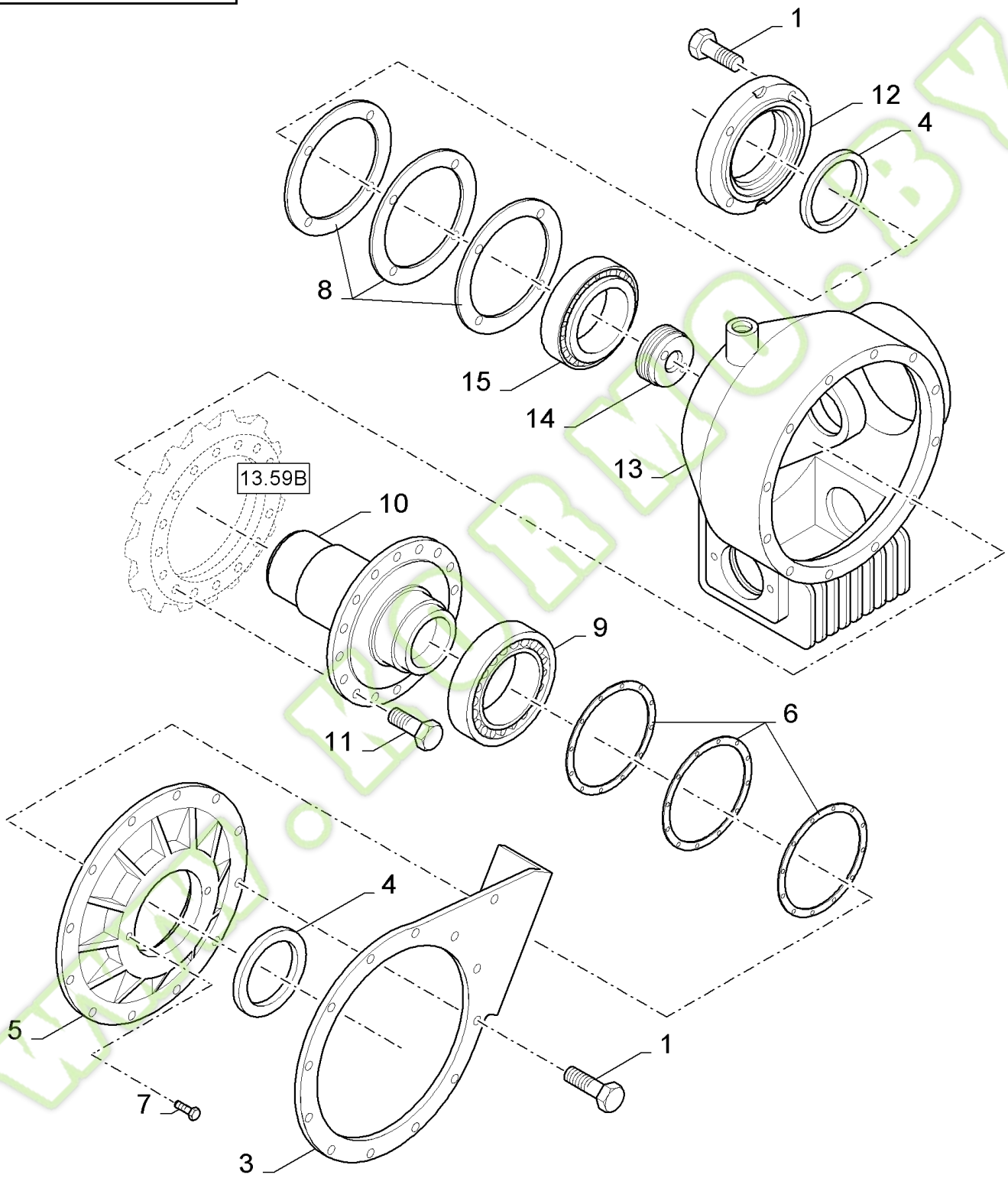

FX50 SELF-PROPELLED FORAGE HARVESTER (10/02-)

13.59A(01) GEARBOX

Ref	Part Number	Qty	Description
	84446908	1	GEARBOX, Incl.figs. 3.12 and 3.13, COMER GEARBOX
1	120068	16	SCREW, {PP:80120068} Hex, M10 x 40, 8.8, Full Thd, M10x40
3	84807807	1	PLATE, COVER,
4	84807654	2	ELEMENT, SEALING,
5	84437967	1	COVER,
6	84100753	AR	SHIM, THK.:0.4MM
7	84446905	2	BOLT, M6x14
8	84447168	AR	SHIM, SET
9	412284	1	BEARING ASSY, {PP:80412284}
10	84446889	1	HUB,
11	84446904	16	BOLT, M10x22
12	84437947	1	COVER,
13	84446888	1	CASING,
14	84446890	1	NUT,
15	84011248	1	BEARING ASSY,

www.KOBMO.BY

13.59B(01) GEARBOX

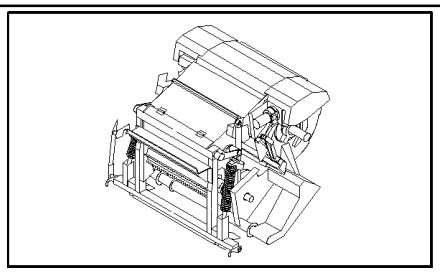

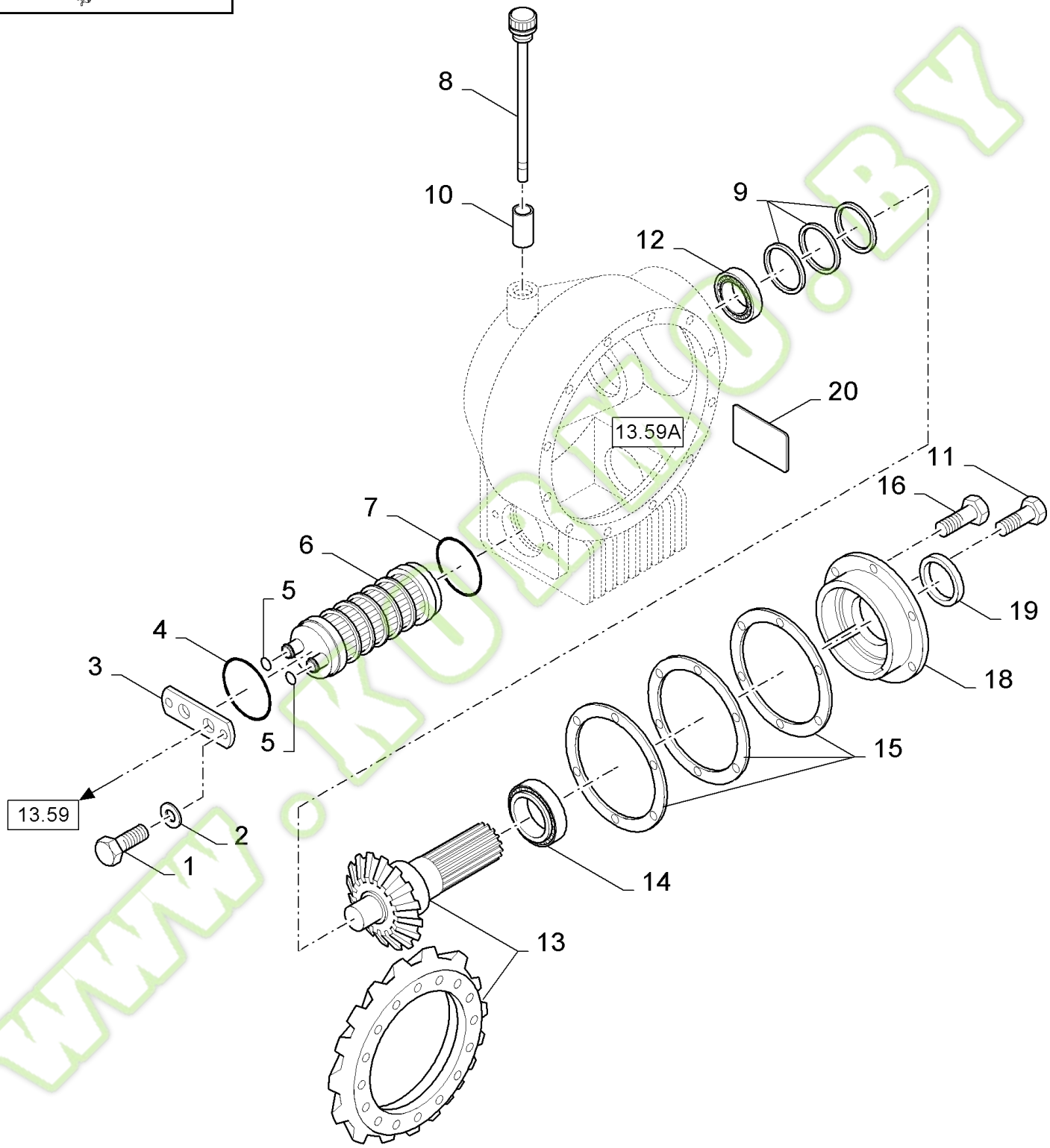

www.KUBOTOBY

FX50 SELF-PROPELLED FORAGE HARVESTER (10/02-)

13.59B(01) GEARBOX

Ref	Part Number	Qty	Description
1	120103	2	SCREW, {PP:80120103} Hex, M8 x 16, 8.8, M8x16
3	84446886	1	PLATE,
4	608377	1	O-RING, {PP:80608377} -234, Cl 7, 2.984" ID x .139" Thk,
5	122056	1	O-RING, {PP:80122056} -017, 70 Duro, .676" ID x .070" Thk,
6	84447136	1	HEAT EXCHANGER,
7	86977781	1	O-RING, -231, 70 Duro, 2.609" ID x .139" Thk,
8	84446887	1	DIPSTICK,
9	84320006	1	SET OF RINGS,
10	84446892	1	TUBE,
11	336199	2	BOLT, {PP:80336199} Hex, M8 x 12, 8.8, Full Thd, M8x12
12	84011249	1	BEARING ASSY,
13	84807281	1	GEAR SET,
14	86509784	1	BEARING, ROLLER,
15	84447169	AR	KIT, SHIM, SET
16	43140	6	BOLT, {PP:80043140} Hex, M10 x 30, 8.8, M10x30
18	84437539	1	COVER,
19	84807653	1	ELEMENT, SEALING,
20	84446730	1	PLATE,

www.KOBMO.BY

13.60(01) CUTTERHEAD, KNIVES AND CORN CRACKER

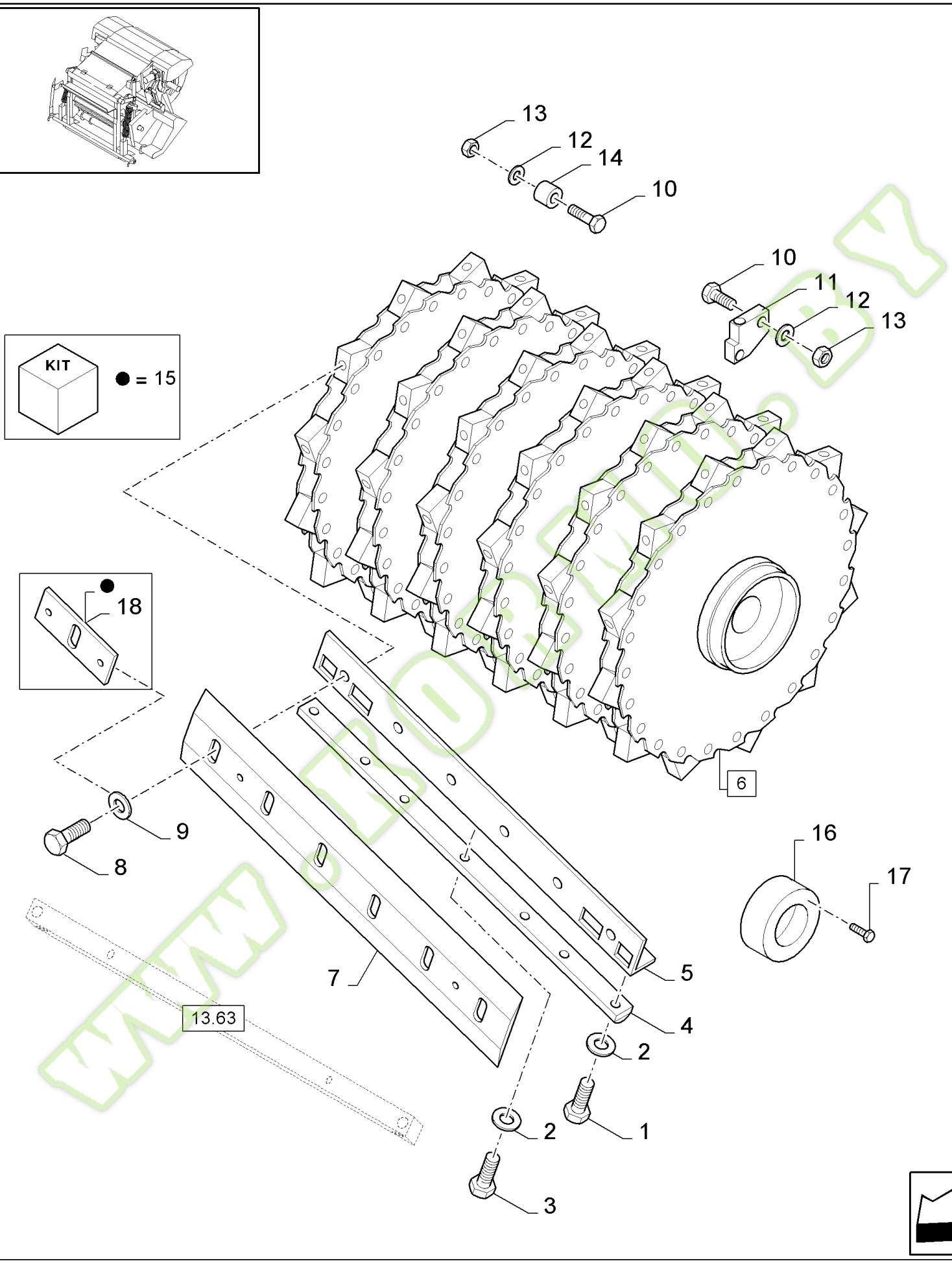

FX50 SELF-PROPELLED FORAGE HARVESTER (10/02-)

13.60(01) CUTTERHEAD, KNIVES AND CORN CRACKER

Ref	Part Number	Qty	Description
1	43127	AR	BOLT, {PP:80043127} Hex, M8 x 25, 8.8, M8x25
2	322358	AR	WASHER, LOCK, {PP:80322358} Belleville, M8, 8MM
3	80120104	AR	SCREW, M8x20
4	84005242	AR	DIA KIT, HARVESTER, , ACCESSORY
5	86503031	AR	SUPPORT,
6	89806975	1	KNIFE HOLDER, (10 to 13)
6	84068811	1	KNIFE HOLDER, (10 to 14), FOR FX60 NA ONLY, WITH 8 KNIVES
7	9819423	AR	KNIFE SET, {PP:89819423} (Set of 2), SPECIFIC FOR GRASS, DO NOT MIX LUND AND BUSATIS ON ONE DRUM, LUND
7	84058342	AR	KNIFE SET, (Set of 2), SPECIFIC FOR GRASS, DO NOT MIX LUND AND BUSATIS ON ONE DRUM, BUSATIS
7	84041142	AR	KNIFE SET, (Set of 2), DO NOT MIX LUND AND BUSATIS ON ONE DRUM, BUSATIS, SPECIFIC FOR CORN
7	84023281	AR	KNIFE SET, (Set of 2), DO NOT MIX LUND AND BUSATIS ON ONE DRUM, LUND, SPECIFIC FOR CORN
8	280732	AR	SCREW, {PP:80280732}
9	84437220	AR	WASHER, , BSN C373
9	84447990	AR	WASHER, , ASN D374
10	385923	AR	SCREW, {PP:80385923} Hex, M16 x 55, 8.8, Full Thd, Hex, M16 x 55, 8.8, Full Thd
11	84035233	AR	SUPPORT,
12	394631	AR	WASHER, {PP:80394631} 16MM
13	100020	AR	NUT, {PP:80100020} M16, Cl 8, M16, Cl 8
14	84068892	48	BUSHING, , FOR FX60 NA ONLY, WITH 8 KNIVES
15	84454375	1	KIT, , SET OF 12 KNIFE PLATES
16	84078252	1	BUSHING, , COMPONENT OF CUTTERHEAD SHAFT REPAIR KIT
17	300476	3	SCREW, {PP:80300476} Hex Soc, M8 x 12 Cup Pt, M8x12, COMPONENT OF CUTTERHEAD SHAFT REPAIR KIT
18	84447668	12	KNIFE, , ALTERNATIVE FOR WASHERS

www.KORMO.BY

13.61(01) SHEARBAR ADJUSTMENT

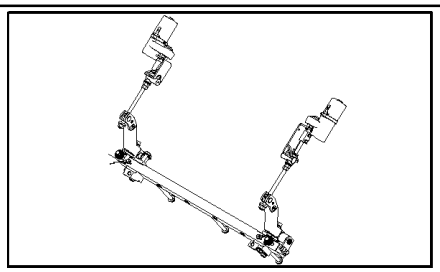

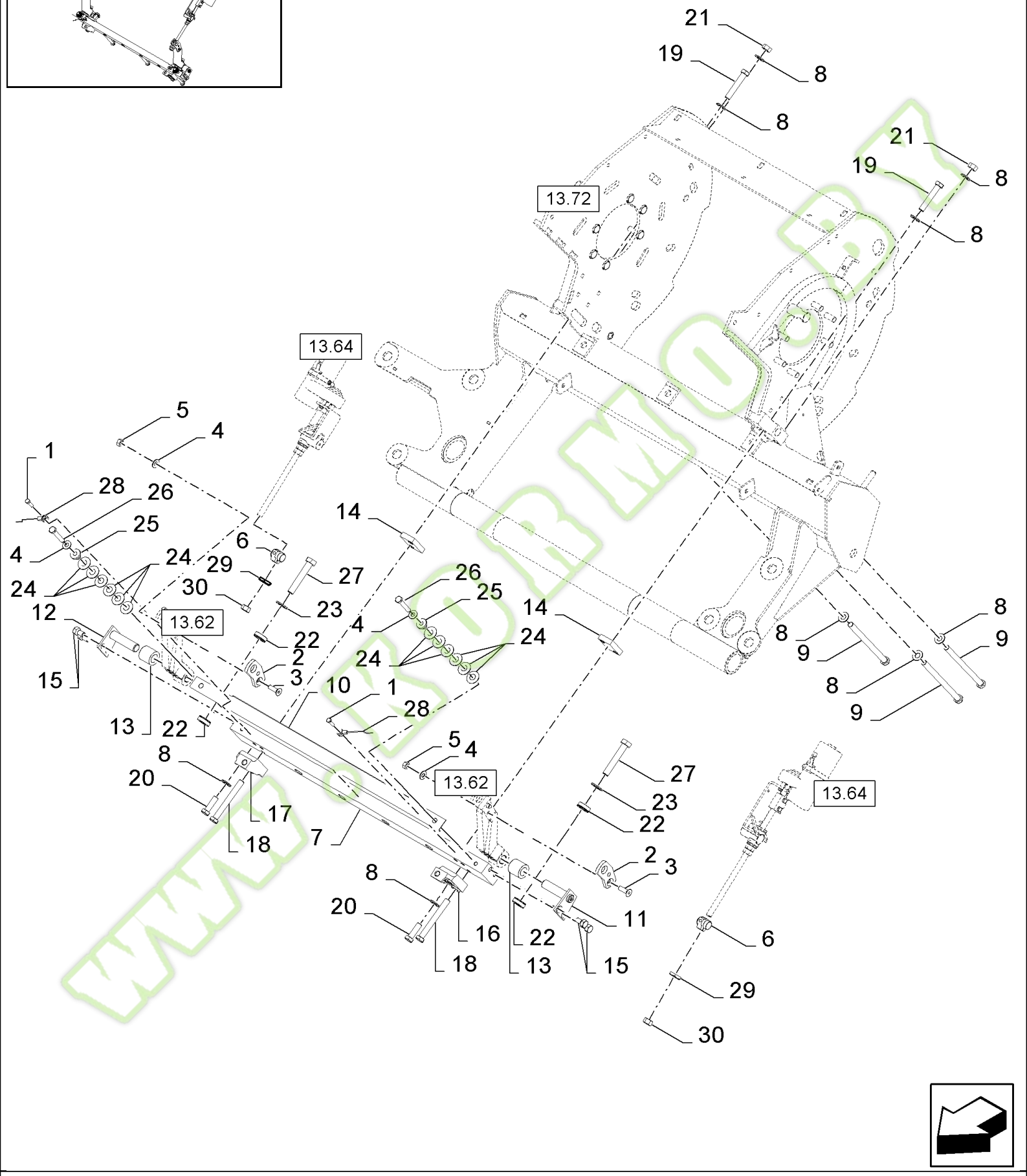

FX50 SELF-PROPELLED FORAGE HARVESTER (10/02-)

13.61(01) SHEARBAR ADJUSTMENT

Ref	Part Number	Qty	Description
1	43128	2	SCREW, {PP:80043128} Hex, M8 x 30, 8.8, Cap, HH, CL 8.8, M8 x 1.25 x 30
2	84443883	2	PLATE,
3	300502	2	SCREW, {PP:80300502} Hex Soc Flat Hd, M12 x 40, 8.8,
4	140046	4	WASHER, LOCK, {PP:80140046} Belleville, M12, 12MM
5	89706685	2	NUT, M12
6	84037660	2	PIN,
7	84443881	1	SHEAR BAR,
8	140048	9	WASHER, LOCK, {PP:80140048} Belleville, M16, 16MM
9	84100159	3	SCREW, Hex, M16 x 250, 8.8, M16x250
10	84038417	1	PLATE, COVER,
11	751296	1	SUPPORT, {PP:80751296} LH
12	751297	1	SUPPORT, {PP:80751297} RH
13	84021005	2	SPACER,
14	84443882	2	BLOCK,
15	161697	4	BOLT, {PP:80161697}
16	84438407	1	SUPPORT, LH
17	84438408	1	SUPPORT, RH
18	80334967	2	SCREW, M16x140, BSN C293
18	362573	2	SCREW, {PP:80362573} Hex, M16 x 150, 8.8, M16x150, ASN D294
19	350616	2	SCREW, {PP:80350616} Hex, M16 x 90, 8.8, M16x90
20	120090	2	SCREW, {PP:80120090} Hex, M16 x 50, 8.8, Hex, M16 x 50, 8.8
21	100020	2	NUT, {PP:80100020} M16, Cl 8, M16, Cl 8
22	84045639	4	SET OF RINGS,
23	378247	2	WASHER, {PP:80378247} 20MM
24	861575	AR	DISC, {PP:80861575}
25	84038820	2	SPACER,
26	9706717	2	SCREW, {PP:89706717} Hex, M12 x 70, 8.8, Full Thd, Hex, M12 x 70, 8.8, Full Thd, BSN C293
26	80300809	2	SCREW, M12x65, ASN D294
27	280227	2	SCREW, {PP:80280227} Hex, 3/4-16 x 4 1/4", G8,
28	84058692	2	SENSOR,
29	84045296	2	NUT,
30	280374	2	NUT, {PP:80280374} 5/8"-11, G5, G5, 5/8"-11

www.KOLMO.BY

13.62(01) SHEARBAR ADJUSTMENT

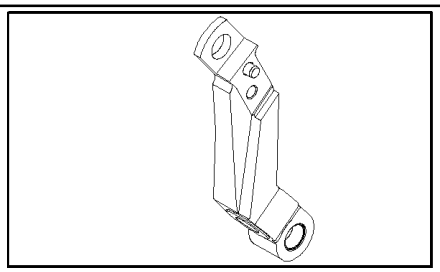

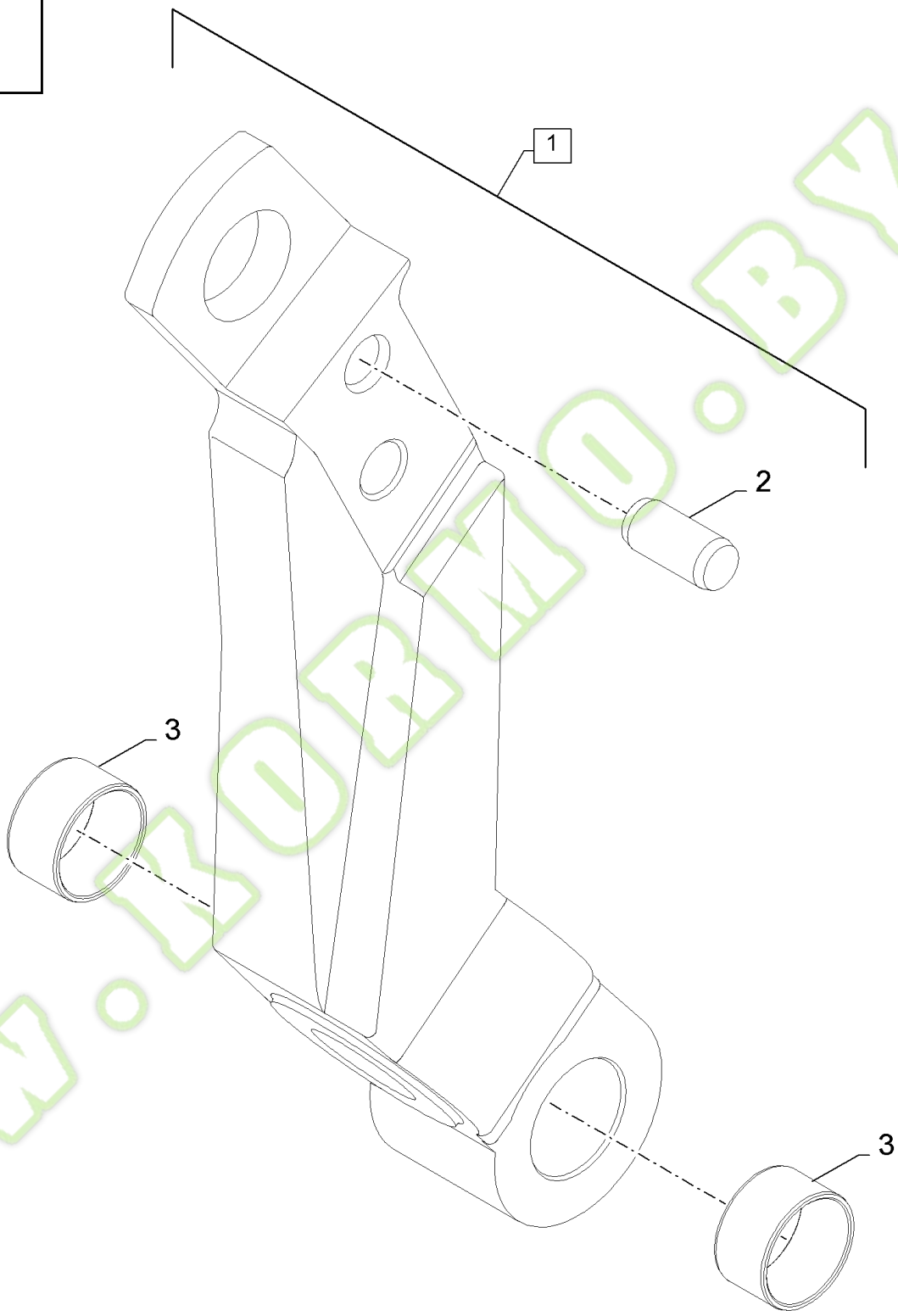

www.KORMO.BY

13.62(01) SHEARBAR ADJUSTMENT

Ref	Part Number	Qty	Description
1	84443884	2	LEVER, (2, 3)
2	84022333	2	PIN,
3	210026	4	BUSHING, {PP:80210026}

www.KORMO.BY

13.63(01) SHEARBAR

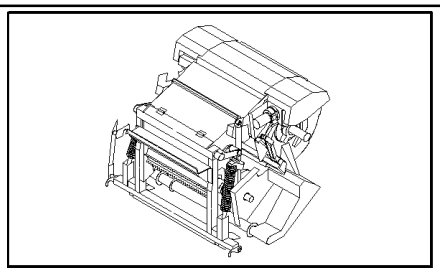

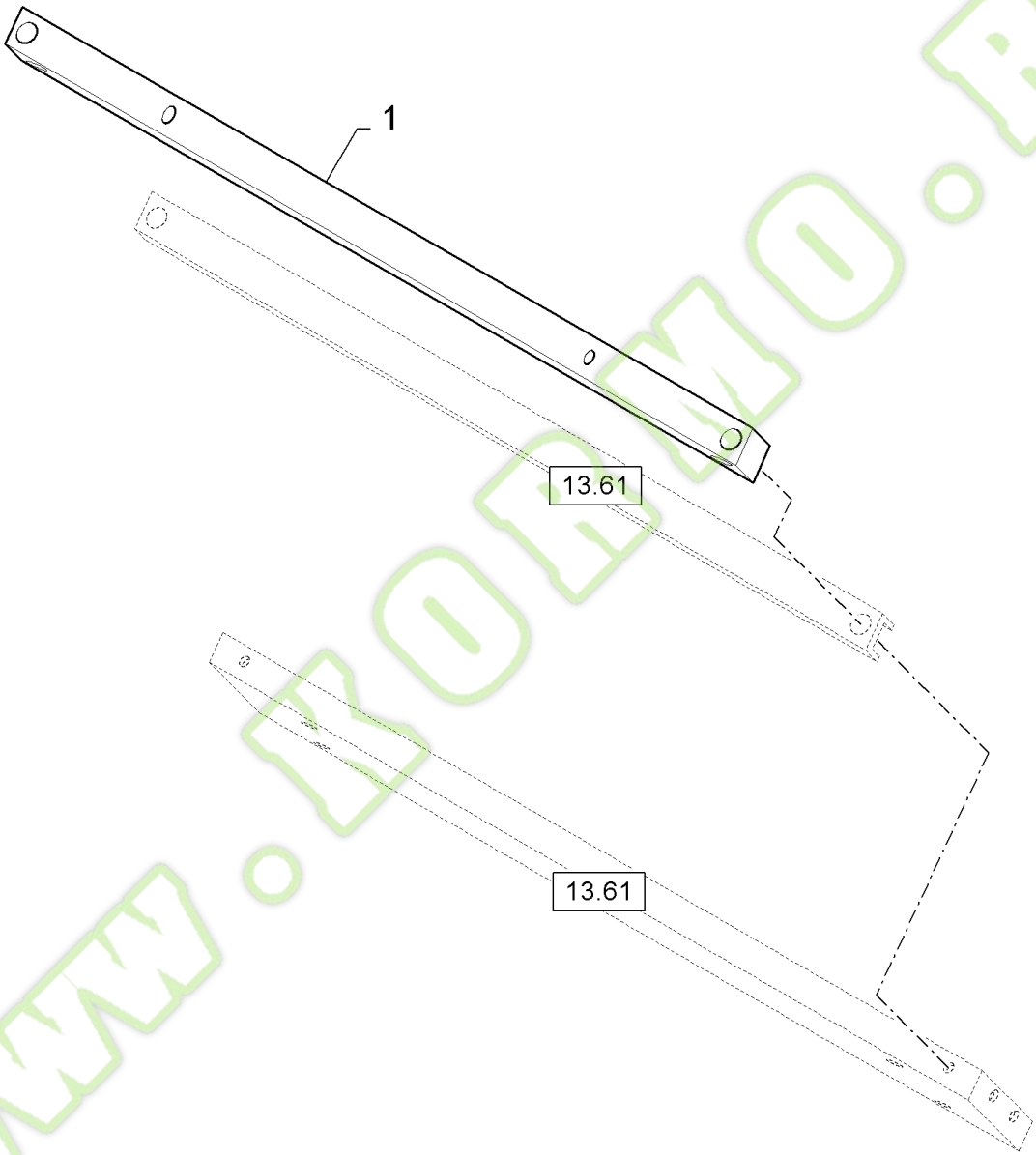

www.KOMO.BY

FX50 SELF-PROPELLED FORAGE HARVESTER (10/02-)

13.63(01) SHEARBAR

Ref	Part Number	Qty	Description
1	84062352	1	SHEAR BAR, CORN, BUSATIS
1	84062351	1	SHEAR BAR, GRASS, LUND
1	84100395	1	SHEAR BAR, CORN, BUSATIS, HEAVY DUTY
1	84058335	1	SHEAR BAR, GRASS, BUSATIS, HEAVY DUTY

WWW.KORMO.BY

13.64(01) SHEARBAR ADJUSTMENT

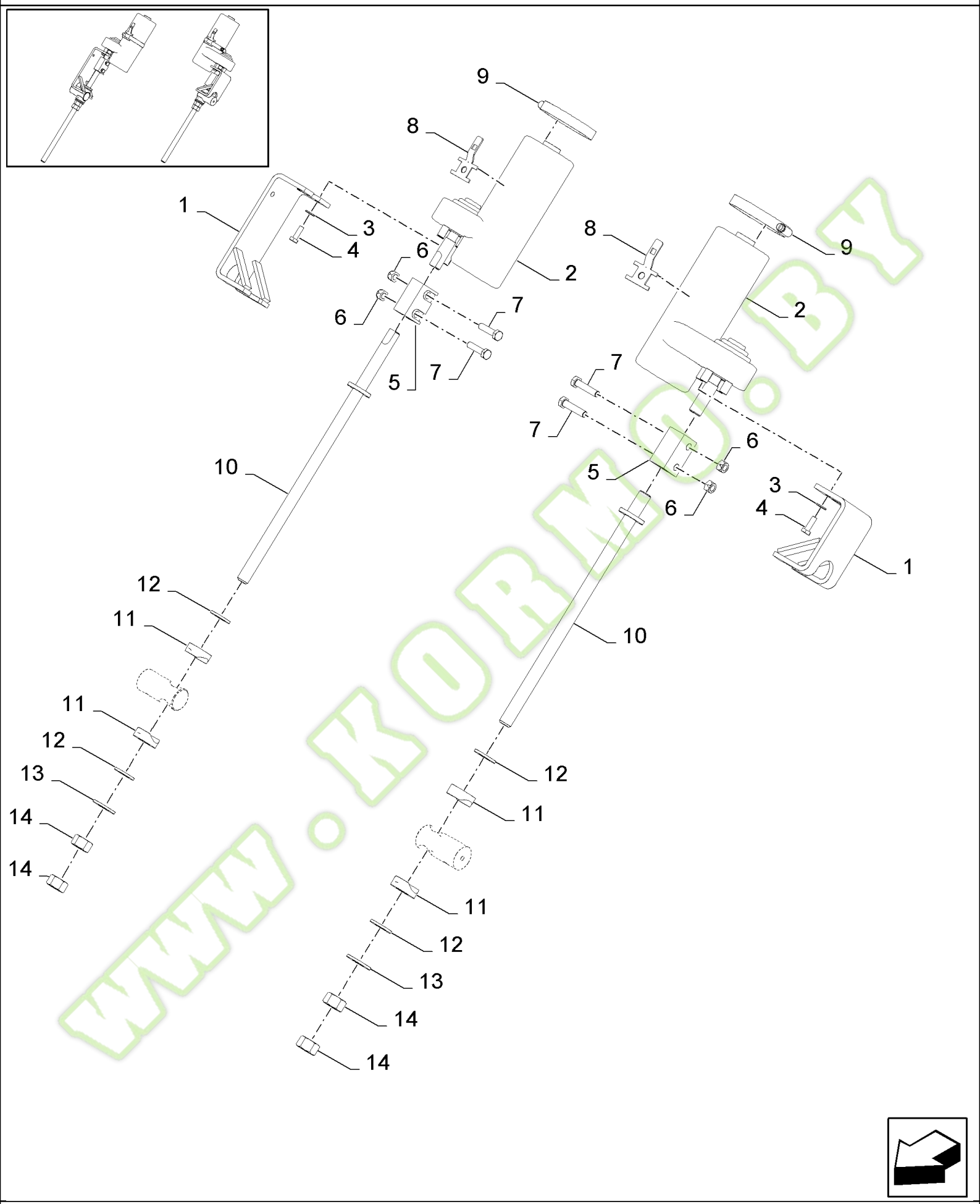

www.KOBMO.BY

FX50 SELF-PROPELLED FORAGE HARVESTER (10/02-)

13.64(01) SHEARBAR ADJUSTMENT

Ref	Part Number	Qty	Description
1	84036696	1	SUPPORT, RH
1	84036697	1	SUPPORT, LH
2	84019725	1	MOTOR, ELECTRIC,
3	322357	3	WASHER, LOCK, {PP:80322357} Belleville, M6, Belleville, M6
4	9707580	3	SCREW, {PP:89707580} Hex, 1/4"-20 x 3/4", G5, Full Thd,
5	84068366	1	BLOCK, CONNECTING,
6	43442	2	NUT, {PP:80043442} M8 x 1.25", Cl 8, M8
7	412479	2	SCREW, {PP:80412479} Hex, M8 x 35, 8.8, M8x35
8	84032700	1	SUPPORT,
9	381145	1	CLAMP, {PP:80381145}
10	89808157	1	ROD, RH
10	84014743	1	ROD, LH
11	851697	2	CLAMP, {PP:80851697}
12	49637	2	WASHER, {PP:80049637}
13	378246	1	WASHER, {PP:80378246} 16MM
14	280374	2	NUT, {PP:80280374} 5/8"-11, G5, G5, 5/8"-11

www.KOBMO.BY

13.65(01) LOWER FEEDROLLS WITH METAL DETECTOR, LH

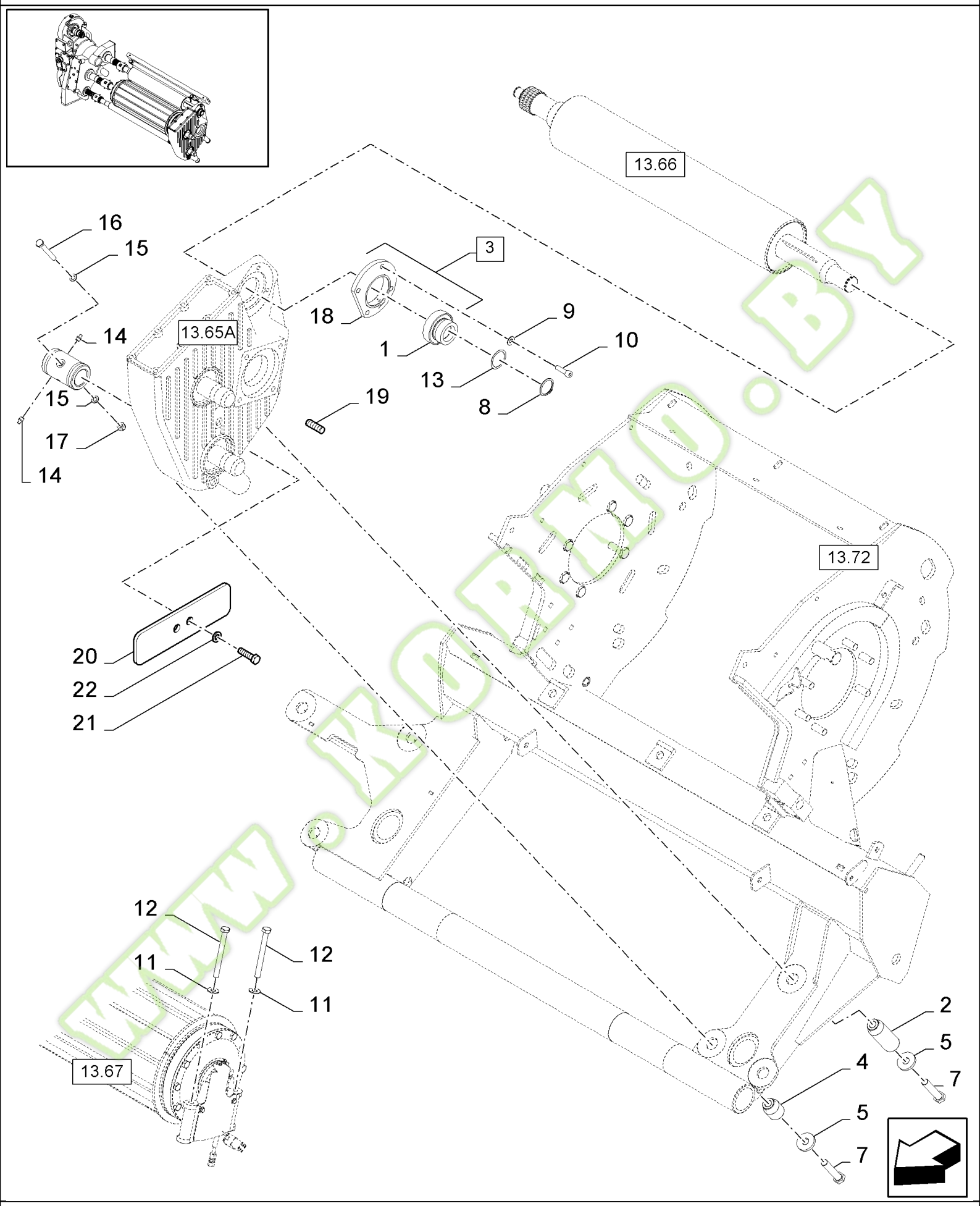

FX50 SELF-PROPELLED FORAGE HARVESTER (10/02-)

13.65(01) LOWER FEEDROLLS WITH METAL DETECTOR, LH

Ref	Part Number	Qty	Description
1	212609	1	BEARING ASSY, {PP:80212609}
2	84443494	1	SPACER,
3	84443539	1	BEARING ASSY, (1,18)
4	84443523	5	SPACER,
5	86592702	6	WASHER, M16 x 45 x 6, HT, 16MM
6	120092	5	SCREW, {PP:80120092} Hex, M16 x 70, 8.8, Hex, M16 x 70, 8.8
7	371221	1	SCREW, {PP:80371221} Hex, M16 x 160, 8.8, M16x160
8	370006	1	CIRCLIP, {PP:80370006}
9	140045	4	WASHER, LOCK, {PP:80140045} Belleville, M10, 10MM
10	86566100	4	SCREW, Hex Soc Hd, M10 x 35, 12.9, M10x35, BSN C269
10	F1NN19N756AA	4	SCREW, {PP:81869630} M10x35, ASN D270
11	140046	2	WASHER, LOCK, {PP:80140046} Belleville, M12, 12MM
12	80309308	2	SCREW, M12x120
13	84014578	AR	PLATE, ADJUSTING,
14	9838669	2	NIPPLE, LUBE, {PP:89838669}
15	84439102	2	RING,
16	120073	1	SCREW, {PP:80120073} Hex, M10 x 80, 8.8, M10x80
17	100037	1	NUT, {PP:80100037} M10 x 1.5, Cl 8, M10
18	NSS	1	NOT SERVICED SEPARATELY,
19	84444797	4	STUD,
20	84446576	1	PLATE, , BSN C269
20	84448482	1	PLATE, , ASN D270
21	9706704	2	BOLT, {PP:89706704} Hex, M10 x 35, 8.8, Full Thd, M10x35, ASN D270
22	140045	2	WASHER, LOCK, {PP:80140045} Belleville, M10, 10MM, ASN D270

www.KORMO.BY

13.65A(01) GEARBOX - HEADER - C269

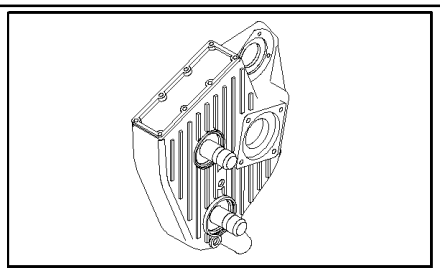

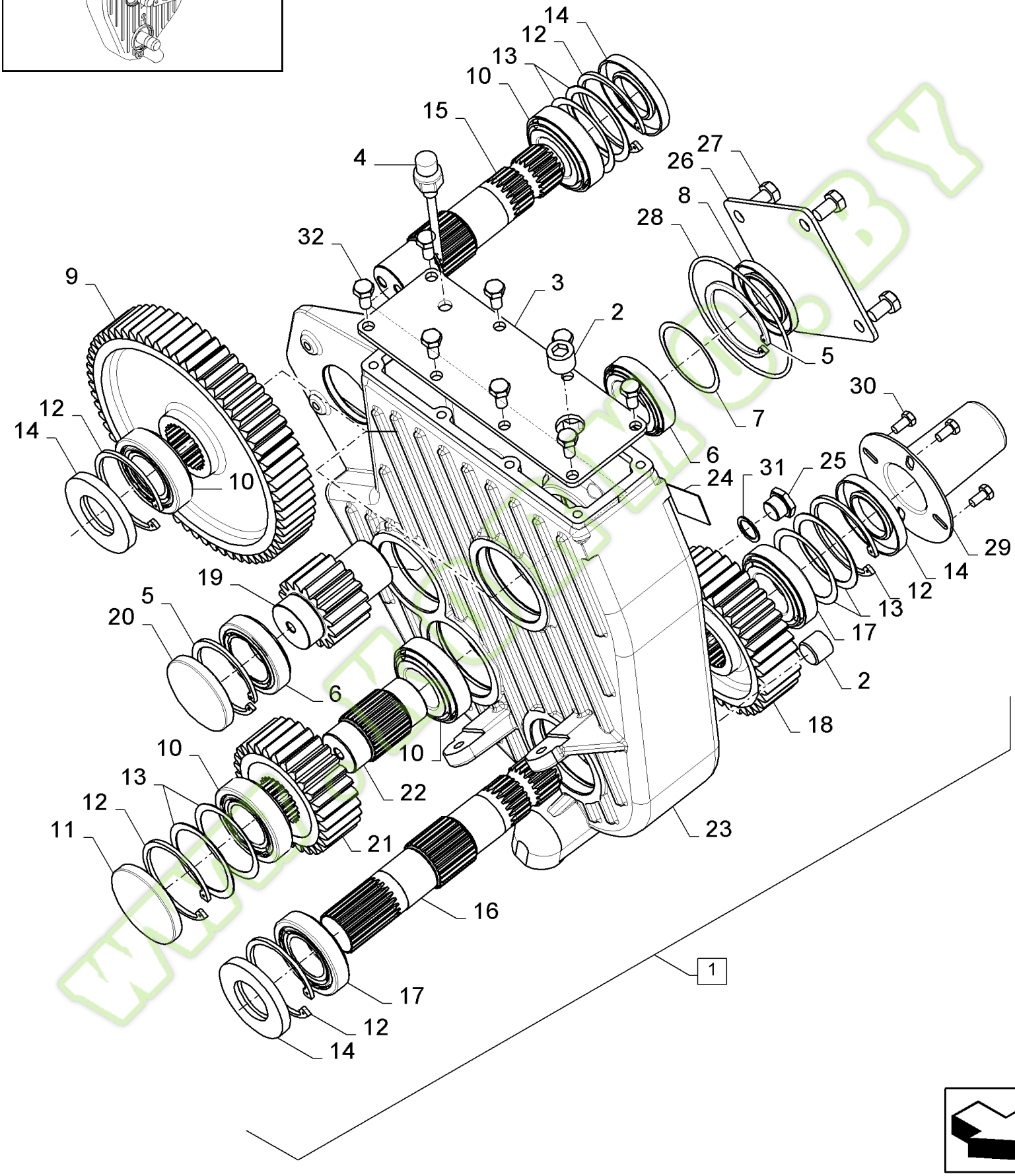

FX50 SELF-PROPELLED FORAGE HARVESTER (10/02-)

13.65A(01) GEARBOX - HEADER - C269

Ref	Part Number	Qty	Description
1	84443156	1	GEARBOX, (2 to 32)
2	84446714	2	PLUG,
3	84446715	1	COVER,
4	84446716	1	PLUG,
5	84446717	2	RING, LOCKING,
6	84446718	2	BEARING ASSY,
7	84814797	1	SHIM,
8	84817150	1	ELEMENT, SEALING,
9	84446720	1	GEAR, Z=64
10	84819200	4	BEARING ASSY,
11	84446721	1	COVER, CAP,
12	84000792	5	CIRCLIP,
13	84053921	3	SHIM,
14	84817147	4	ELEMENT, SEALING,
15	84446722	1	SHAFT,
16	84446723	1	SHAFT,
17	84819201	2	BEARING ASSY,
18	84446724	1	GEAR, Z=38
19	84446725	1	SHAFT,
20	84814798	1	COVER,
21	84446727	1	GEAR, Z=29
22	84446728	1	SHAFT,
23	84446729	1	CASING,
24	84446730	1	PLATE,
25	84446731	1	PLUG,
26	84446732	1	COVER,
27	80043151	4	SCREW, M12x20
28	84446733	1	O-RING,
29	84446734	1	COVER,
30	120103	4	SCREW, {PP:80120103} Hex, M8 x 16, 8.8, M8x16
31	84446735	1	RING, LOCKING,
32	80300383	8	SCREW, M10x16

www.KOBMO.BY

13.65B(01) GEARBOX - HEADER - D270

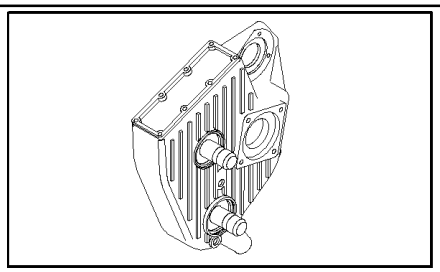

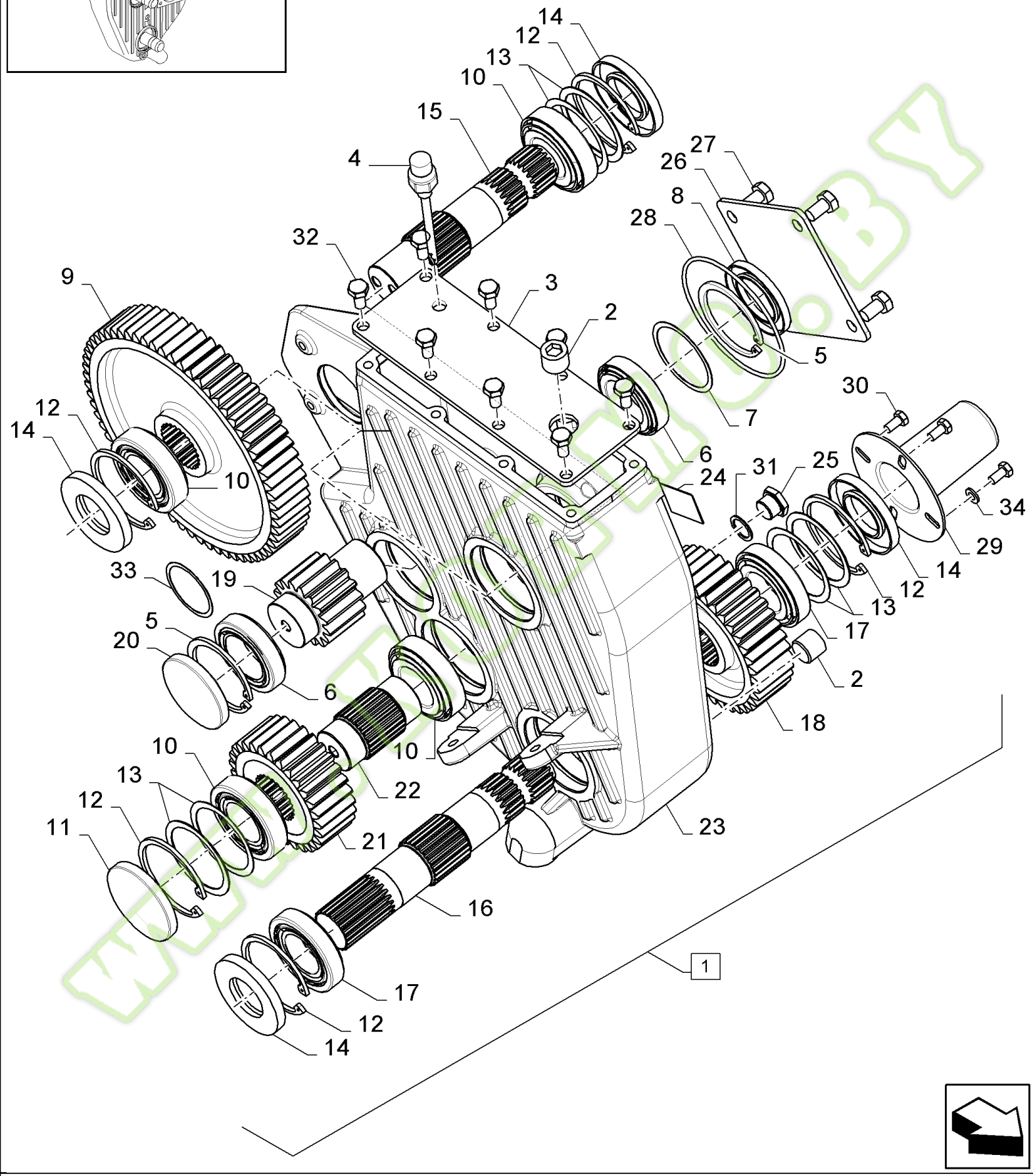

FX50 SELF-PROPELLED FORAGE HARVESTER (10/02-)

13.65B(01) GEARBOX - HEADER - D270

Ref	Part Number	Qty	Description
1	84443156	1	GEARBOX, (2 to 32)
2	84446823	1	PLUG,
3	84446715	1	COVER,
4	84446854	1	ELBOW,
5	84446717	2	RING, LOCKING,
6	84446718	2	BEARING ASSY,
7	84814797	1	SHIM,
8	84817150	1	ELEMENT, SEALING,
9	84446720	1	GEAR, Z=64
10	84819200	4	BEARING ASSY,
11	84446721	1	COVER, CAP,
12	84000792	5	CIRCLIP,
13	84053921	3	SHIM,
14	84817147	4	ELEMENT, SEALING,
15	84446722	1	SHAFT,
16	84446723	1	SHAFT,
17	84819201	2	BEARING ASSY,
18	84446724	1	GEAR, Z=38
19	84446725	1	SHAFT,
20	84814798	1	COVER,
21	84446727	1	GEAR, Z=29
22	84446728	1	SHAFT,
23	84458463	1	CASING,
24	84446730	1	PLATE,
25	84446714	2	PLUG,
26	84446732	1	COVER,
27	80043151	4	SCREW, M12x20
28	84446733	1	O-RING,
29	84446734	1	COVER,
30	120103	4	SCREW, {PP:80120103} Hex, M8 x 16, 8.8, M8x16
31	84446735	1	RING, LOCKING,
32	43138	8	SCREW, {PP:80043138} Hex, M10 x 20, 8.8, Full Thd, M10x20
33	84814797	3	SHIM,
34	86511315	4	WASHER, M8 x 16 x 1.6, 8MM

www.KOBMO.BY

FX50 SELF-PROPELLED FORAGE HARVESTER (10/02-)

13.66(01) LOWER FEEDROLLS WITH METAL DETECTOR, RH

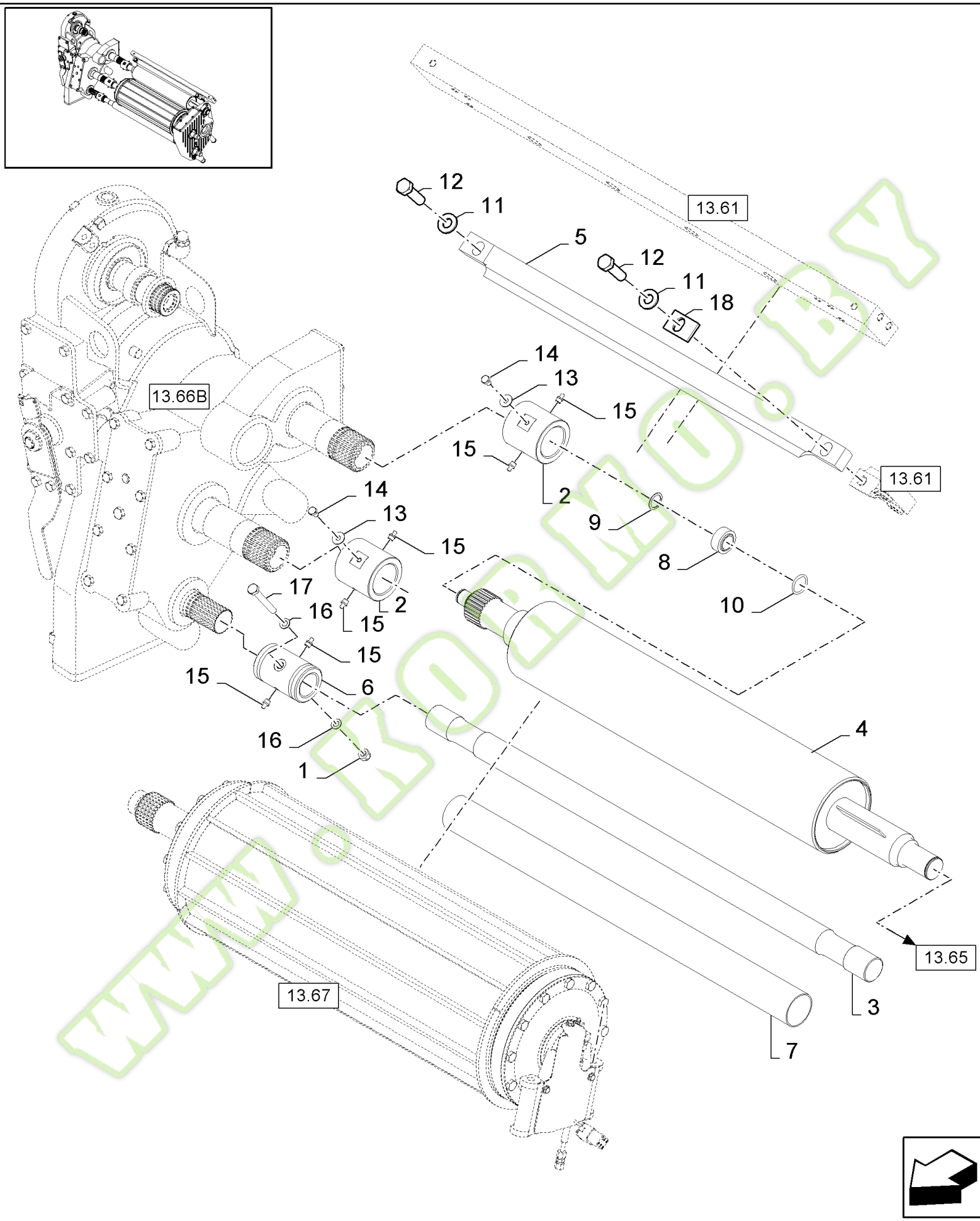

FX50 SELF-PROPELLED FORAGE HARVESTER (10/02-)

13.66(01) LOWER FEEDROLLS WITH METAL DETECTOR, RH

Ref	Part Number	Qty	Description
1	100037	1	NUT, {PP:80100037} M10 x 1.5, Cl 8, M10
2	84054941	2	BLOCK, CONNECTING,
3	84443496	1	SHAFT,
4	84443548	1	ROLLER,
5	84438406	1	TOOL, SCRAPER,
6	84443492	2	BUSHING,
7	84443541	1	TUBE,
8	84054931	1	BEARING ASSY,
9	80370002	1	CIRCLIP,
10	80452548	1	O-RING, , BSN C293
10	353108	1	O-RING, {PP:80353108} -219, 70 Duro, 1.296" ID x .139" Thk, , ASN D294
11	394631	2	WASHER, {PP:80394631} 16MM
12	385923	2	SCREW, {PP:80385923} Hex, M16 x 55, 8.8, Full Thd, Hex, M16 x 55, 8.8, Full Thd
13	412650	2	WASHER, LOCK, {PP:80412650} Belleville, M8,
14	84017119	2	SCREW, Hex Soc, M8 x 16, M8x16
15	9838669	6	NIPPLE, LUBE, {PP:89838669}
16	84439102	2	RING,
17	120073	1	SCREW, {PP:80120073} Hex, M10 x 80, 8.8, M10x80
18	84449227	2	SHIM, THK.:2MM, ASN D294

WWW.KOBMO.BY

13.66A(01) GEARBOX "HYDROLOC", LH - C269

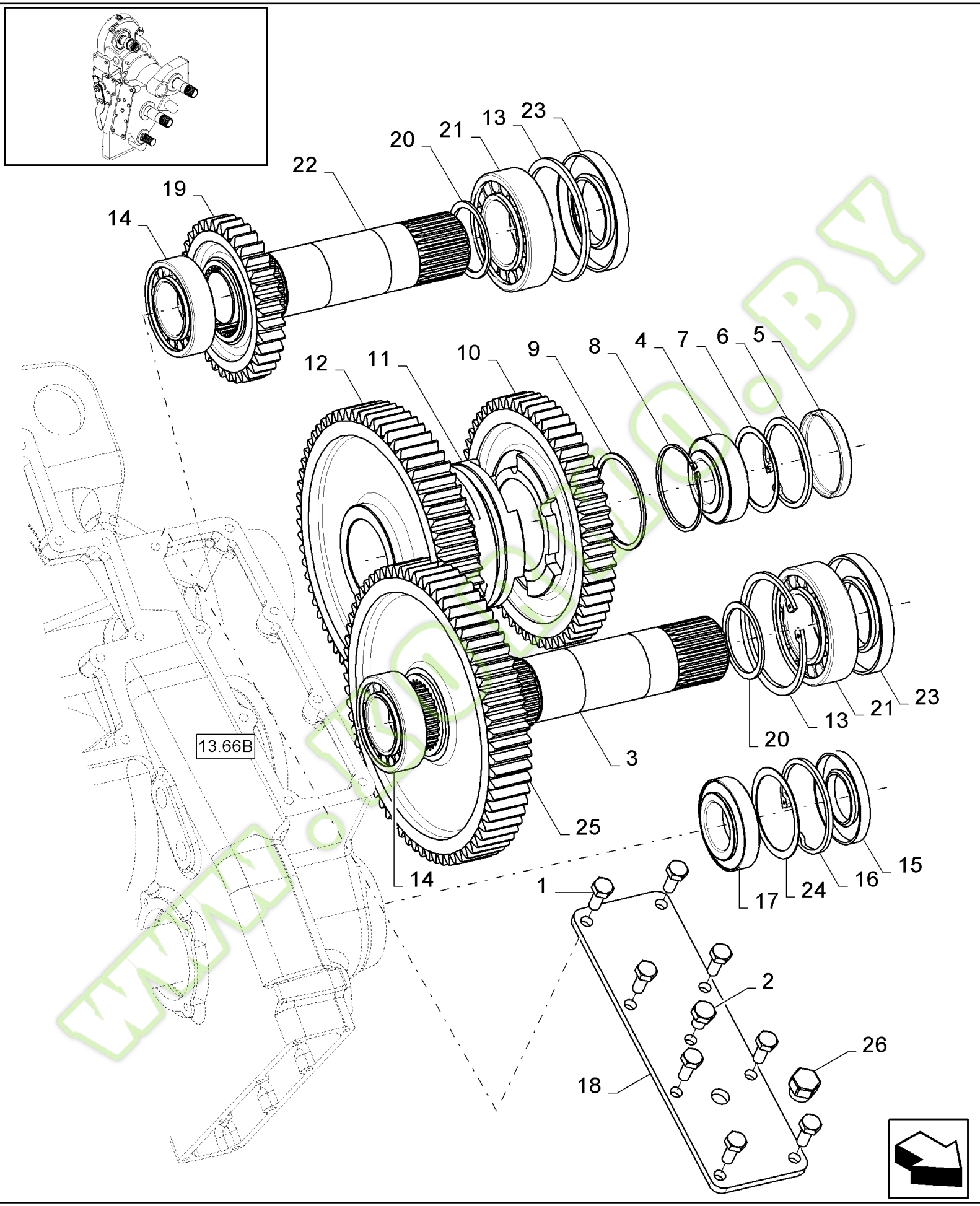

FX50 SELF-PROPELLED FORAGE HARVESTER (10/02-)

13.66A(01) GEARBOX "HYDROLOC", LH - C269

Ref	Part Number	Qty	Description
	84443155	1	GEARBOX, hydroloc (incl. groups 13.66A, 13.66B)
1	43139	8	SCREW, {PP:80043139} Hex, M10 x 25, 8.8, Full Thd, M10x25
2	84100733	1	PLUG, Hex, M12 x 1 x 22.5, 8.8, Full Thd,
3	84446813	1	SHAFT,
4	84446814	1	BEARING ASSY,
5	84814798	1	COVER,
6	84446717	1	RING, LOCKING,
7	84814797	1	SHIM,
8	84446817	1	SHAFT,
9	84446859	1	SHIM,
10	84446818	1	GEAR,
11	84446819	1	BUSHING,
12	84446822	1	GEAR,
13	301652	2	RING, SNAP, {PP:80301652}
14	84446834	2	BEARING ASSY,
15	84817147	1	ELEMENT, SEALING,
16	84000792	1	CIRCLIP,
17	84819201	1	BEARING ASSY,
18	84446837	1	COVER,
19	84446838	1	SPROCKET, DRIVEN,
20	84446839	2	SHIM,
21	84446840	2	BEARING ASSY,
22	84446843	1	SHAFT,
23	84817148	2	ELEMENT, SEALING,
24	84053921	1	SHIM,
25	84446847	1	SPROCKET, DRIVEN,
26	84446731	1	PLUG,

www.KOBMO.BY

13.66B(01) GEARBOX "HYDROLOC", RH - C269

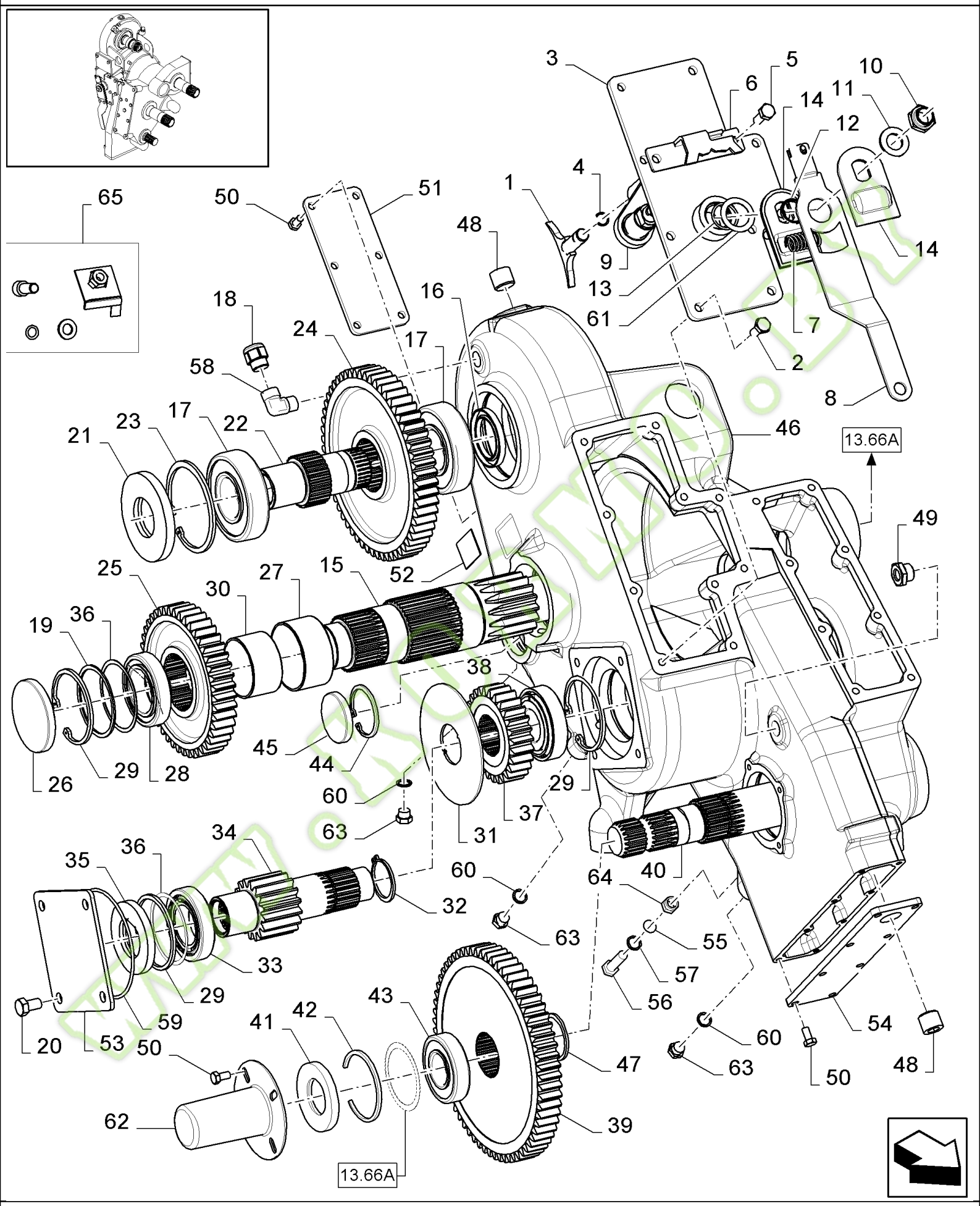

FX50 SELF-PROPELLED FORAGE HARVESTER (10/02-)

13.66B(01) GEARBOX "HYDROLOC", RH - C269

Ref	Part Number	Qty	Description
1	84446803	1	YOKE,
2	43139	8	SCREW, {PP:80043139} Hex, M10 x 25, 8.8, Full Thd, M10x25
3	84446804	1	COVER,
4	84446805	1	RING, SNAP,
5	43140	2	BOLT, {PP:80043140} Hex, M10 x 30, 8.8, M10x30
6	84446806	1	PLATE,
7	84446807	1	SPRING,
8	84446808	1	RING, LOCKING,
9	84446809	1	LEVER,
10	84446879	1	NUT,
11	86511327	1	WASHER, M20 x 37 x 3, 20MM
12	84446810	1	WASHER,
13	84817155	1	O-RING,
14	84446812	2	PLATE,
15	84446816	1	SHAFT,
16	84817145	1	ELEMENT, SEALING,
17	388069	2	BEARING ASSY, {PP:80388069}
18	84446823	1	PLUG,
19	84446825	1	SHIM,
20	80043151	4	SCREW, M12x20
21	84817149	1	ELEMENT, SEALING,
22	84446826	1	SHAFT,
23	301652	1	RING, SNAP, {PP:80301652}
24	84446827	1	GEAR,
25	84446828	1	GEAR,
26	86623227	1	COVER, CAP,
27	84446860	1	BEARING ASSY,
28	853116	1	BEARING ASSY, {PP:80853116}
29	84000820	3	CIRCLIP,
30	84446829	1	BEARING ASSY,
31	84446830	1	SHIM,
32	84446831	1	RING, SNAP,
33	84819349	1	BEARING ASSY,
34	84446832	1	SHAFT,
35	84817146	1	ELEMENT, SEALING,
36	84447163	1	KIT, SHIM,
37	84814790	1	GEAR,
38	84819202	1	BEARING ASSY,
39	84446835	1	SPROCKET, DRIVEN,
40	84446836	1	SHAFT,
41	84817147	1	ELEMENT, SEALING,
42	84000792	1	CIRCLIP,
43	84819201	1	BEARING ASSY,
44	84446842	1	RING, SNAP,
45	84446844	1	COVER, CAP,

AUTO.KOBMO.BY

FX50 SELF-PROPELLED FORAGE HARVESTER (10/02-)

13.66B(01) GEARBOX "HYDROLOC", RH - C269

Ref	Part Number	Qty	Description
46	84446845	1	CASING,
47	84074466	1	CIRCLIP,
48	84446714	2	PLUG,
49	86557412	1	PLUG,
51	84446848	1	COVER,
52	84446730	1	PLATE,
53	84446732	1	COVER,
54	84446850	1	COVER,
55	84446851	1	O-RING,
56	84446852	1	BOLT, M12x28
57	86511324	1	WASHER, M12 x 24 x 2.5, 12MM
58	84446854	1	ELBOW,
59	84446733	1	O-RING,
60	84446863	4	RING, LOCKING,
61	84053919	1	SHIM,
62	84446734	1	COVER,
63	84446857	4	PLUG,
64	412388	1	NUT, {PP:80412388} M12 x 1.75, Cl 8, M12
65	84446858	1	PLATE,
50	16043224	18	SCREW, Hex, M8 x 16, 8.8, Full Thd, M8x16

www.KOBMO.BY

13.66C(01) GEARBOX "HYDROLOC", LH - D270

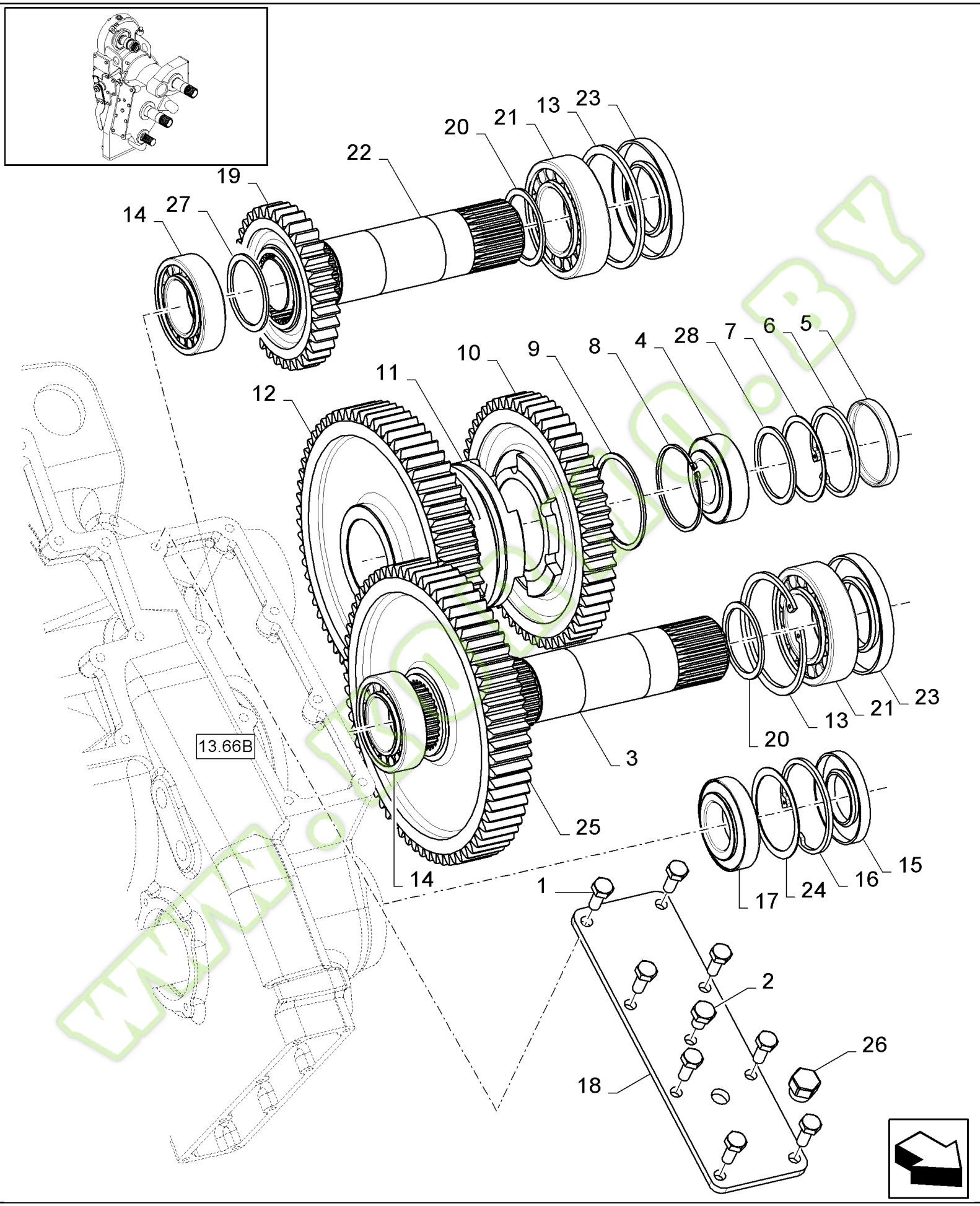

FX50 SELF-PROPELLED FORAGE HARVESTER (10/02-)

13.66C(01) GEARBOX "HYDROLOC", LH - D270

Ref	Part Number	Qty	Description
	84457612	1	GEARBOX, hydroloc (incl. groups 13.66A, 13.66B)
1	43139	8	SCREW, {PP:80043139} Hex, M10 x 25, 8.8, Full Thd, M10x25
2	84100733	1	PLUG, Hex, M12 x 1 x 22.5, 8.8, Full Thd,
3	84452078	1	SHAFT,
4	84446814	1	BEARING ASSY,
5	84814798	1	COVER,
6	84446717	1	RING, LOCKING,
7	84814797	1	SHIM,
8	84446817	1	SHAFT,
9	84446859	1	SHIM,
10	84446818	1	GEAR,
11	84446819	1	BUSHING,
12	84446822	1	GEAR,
13	301652	2	RING, SNAP, {PP:80301652}
14	84452086	2	BEARING, ROLLER,
15	84817147	1	ELEMENT, SEALING,
16	84000792	1	CIRCLIP,
17	84819201	1	BEARING ASSY,
18	84446837	1	COVER,
19	84446838	1	SPROCKET, DRIVEN,
20	84446839	2	SHIM,
21	84452087	2	BEARING, ROLLER,
22	84452079	1	SHAFT,
23	84817148	2	ELEMENT, SEALING,
24	84053921	1	SHIM,
25	84452081	1	GEAR,
26	84446731	1	PLUG,
27	84449860	1	PLATE,
28	84449859	2	PLATE,

www.KOBMO.BY

13.66D(01) GEARBOX "HYDROLOC", RH - D270

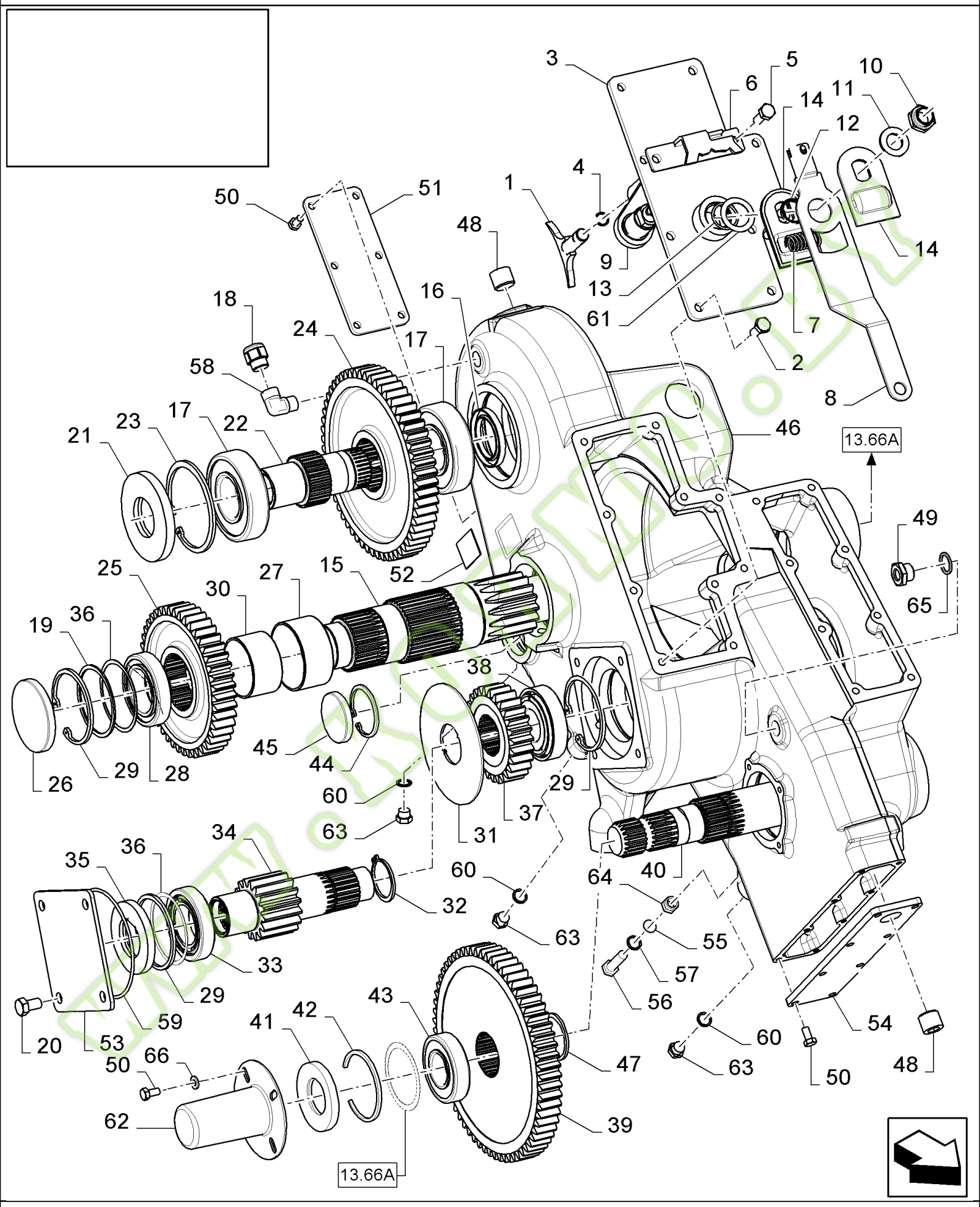

FX50 SELF-PROPELLED FORAGE HARVESTER (10/02-)

13.66D(01) GEARBOX "HYDROLOC", RH - D270

Ref	Part Number	Qty	Description
1	84446803	1	YOKE,
2	43139	8	SCREW, {PP:80043139} Hex, M10 x 25, 8.8, Full Thd, M10x25
3	84446804	1	COVER,
4	84446805	1	RING, SNAP,
5	43140	2	BOLT, {PP:80043140} Hex, M10 x 30, 8.8, M10x30
6	84446806	1	PLATE,
7	84446807	1	SPRING,
8	84446808	1	RING, LOCKING,
9	84446809	1	LEVER,
10	84446879	1	NUT,
11	86511327	1	WASHER, M20 x 37 x 3, 20MM
12	84446810	1	WASHER,
13	84817155	1	O-RING,
14	84446812	2	PLATE,
15	84452080	1	SHAFT,
16	84817145	1	ELEMENT, SEALING,
17	388069	2	BEARING ASSY, {PP:80388069}
18	84446823	1	PLUG,
19	84446825	1	SHIM,
20	80043151	4	SCREW, M12x20
21	84817149	1	ELEMENT, SEALING,
22	84446826	1	SHAFT,
23	301652	1	RING, SNAP, {PP:80301652}
24	84446827	1	GEAR,
25	84446828	1	GEAR,
26	86623227	1	COVER, CAP,
27	84446860	1	BEARING ASSY,
28	853116	1	BEARING ASSY, {PP:80853116}
29	84000820	3	CIRCLIP,
30	84446829	1	BEARING ASSY,
31	84446830	1	SHIM,
32	84446831	1	RING, SNAP,
33	84819349	1	BEARING ASSY,
34	84446832	1	SHAFT,
35	84817146	1	ELEMENT, SEALING,
36	84447163	1	KIT, SHIM,
37	84814790	1	GEAR,
38	84819202	1	BEARING ASSY,
39	84446835	1	SPROCKET, DRIVEN,
40	84446836	1	SHAFT,
41	84817147	1	ELEMENT, SEALING,
42	84000792	1	CIRCLIP,
43	84819201	1	BEARING ASSY,
44	84446842	1	RING, SNAP,
45	84446844	1	COVER, CAP,

AUTO.KOBMO.BY

13.66D(01) GEARBOX "HYDROLOC", RH - D270

Ref	Part Number	Qty	Description
46	84452077	1	CASING,
47	84074466	1	CIRCLIP,
48	84446714	2	PLUG,
49	84320005	1	PLUG,
50	120103	18	SCREW, {PP:80120103} Hex, M8 x 16, 8.8, M8x16
51	84457644	1	COVER,
52	84446730	1	PLATE,
53	84446732	1	COVER,
54	84446850	1	COVER,
55	84446851	1	O-RING,
56	84446852	1	BOLT, M12x28
57	86511324	1	WASHER, M12 x 24 x 2.5, 12MM
58	84446854	1	ELBOW,
59	84446733	1	O-RING,
60	84446863	4	RING, LOCKING,
61	84053919	1	SHIM,
62	84446734	1	COVER,
63	84446857	4	PLUG,
64	412388	1	NUT, {PP:80412388} M12 x 1.75, Cl 8, M12
65	84446735	1	RING, LOCKING, G 3/8
66	86511315	4	WASHER, M8 x 16 x 1.6, 8MM

www.KOBMO.BY

13.67(01) LOWER FEEDROLLS WITH METAL DETECTOR

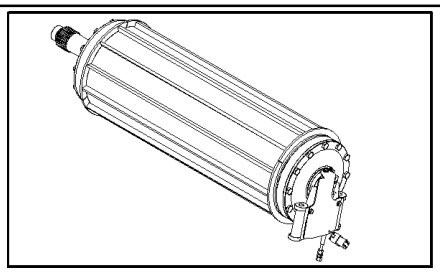

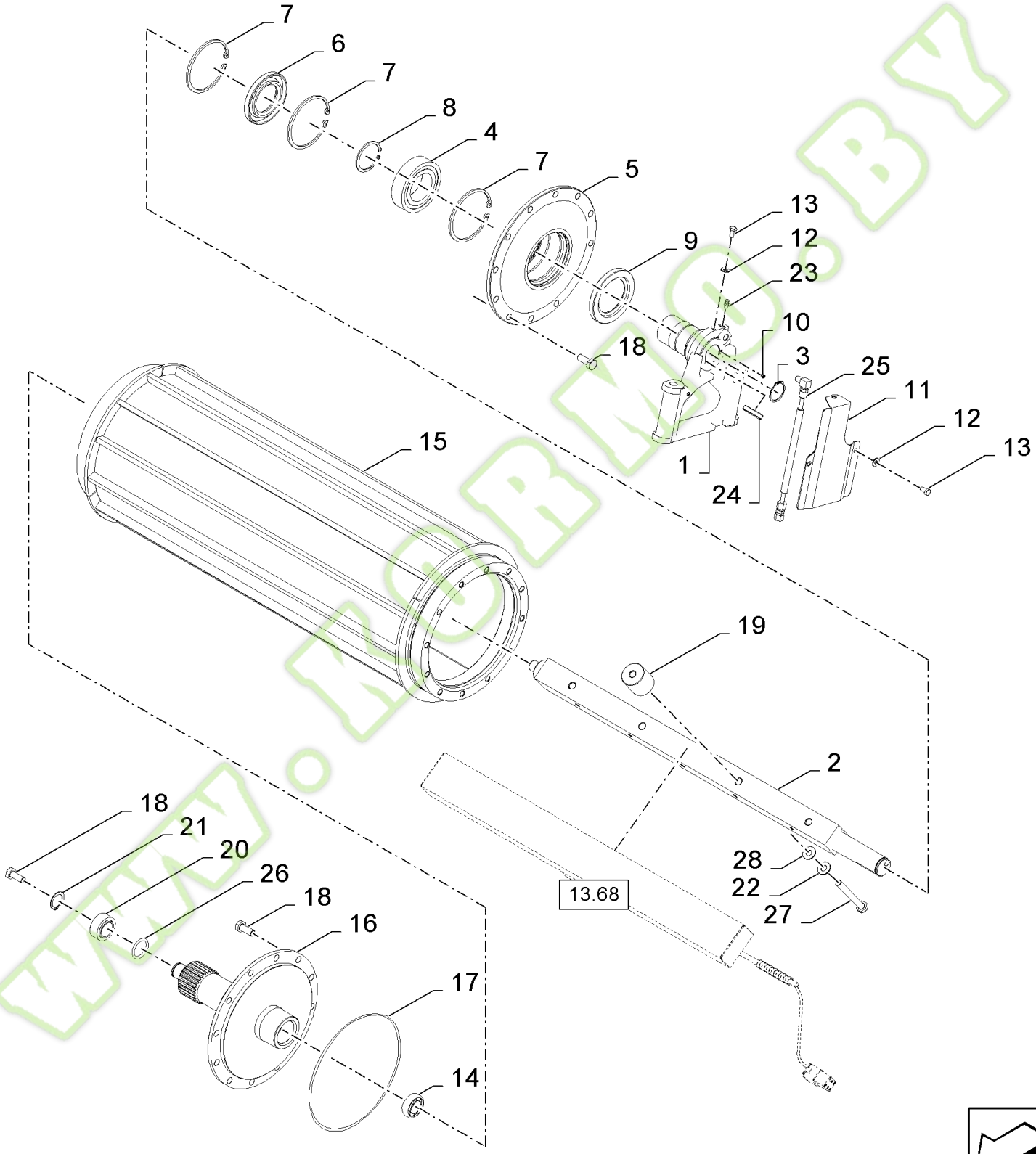

WWW.KOBMIG.BY

FX50 SELF-PROPELLED FORAGE HARVESTER (10/02-)

13.67(01) LOWER FEEDROLLS WITH METAL DETECTOR

Ref	Part Number	Qty	Description
1	84438307	1	SUPPORT,
2	84442268	1	SHAFT,
3	9840045	1	CIRCLIP, {PP:89840045}
4	330685	1	BEARING ASSY, {PP:80330685}
5	84443084	1	HUB, , BSN C314
5	84449920	1	HUB, , ASN D315
6	80419954	1	GASKET,
7	370013	3	RING, SNAP, {PP:80370013}
8	370008	1	CIRCLIP, {PP:80370008}
9	84442507	1	SEAL, RUBBER,
10	84012755	1	SCREW, Hex Soc, M6 x 5, M6x5
11	84442257	1	PLATE,
12	322357	3	WASHER, LOCK, {PP:80322357} Belleville, M6, Belleville, M6
13	86977726	3	SCREW, Hex, M6 x 12, 8.8, M6x12
14	362804	1	BEARING, BALL, {PP:80362804}
15	84443127	1	ROLLER,
16	84444206	1	FLANGE,
17	84442375	2	O-RING,
18	84056909	24	BOLT, Hex, Lock, M10 x 25, M10x25
19	84442496	4	BUSHING, , BSN C293
19	84452410	4	BUSHING, , ASN D294
20	84054931	1	BEARING ASSY,
21	80370002	1	CIRCLIP,
22	140045	4	WASHER, LOCK, {PP:80140045} Belleville, M10, 10MM
23	321204	1	NIPPLE, LUBE, {PP:80321204}
24	170008	1	KEY, {PP:80170008}
25	84442324	1	HOSE,
26	80452548	1	O-RING, , BSN C293
26	353108	1	O-RING, {PP:80353108} -219, 70 Duro, 1.296" ID x .139" Thk, , ASN D294
26	353108	1	O-RING, {PP:80353108} -219, 70 Duro, 1.296" ID x .139" Thk,
27	80120075	4	SCREW, M10x100
28	140042	4	WASHER, LOCK, {PP:80140042} M10 x 34 x 3, 10MM, ASN D294

www.ZOBMO.BY

13.68(01) METAL DETECTOR ASSEMBLY

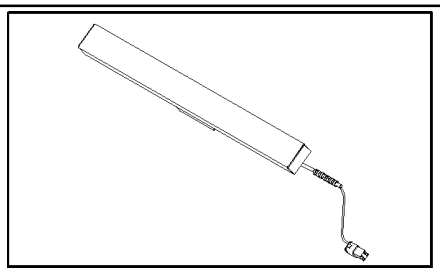

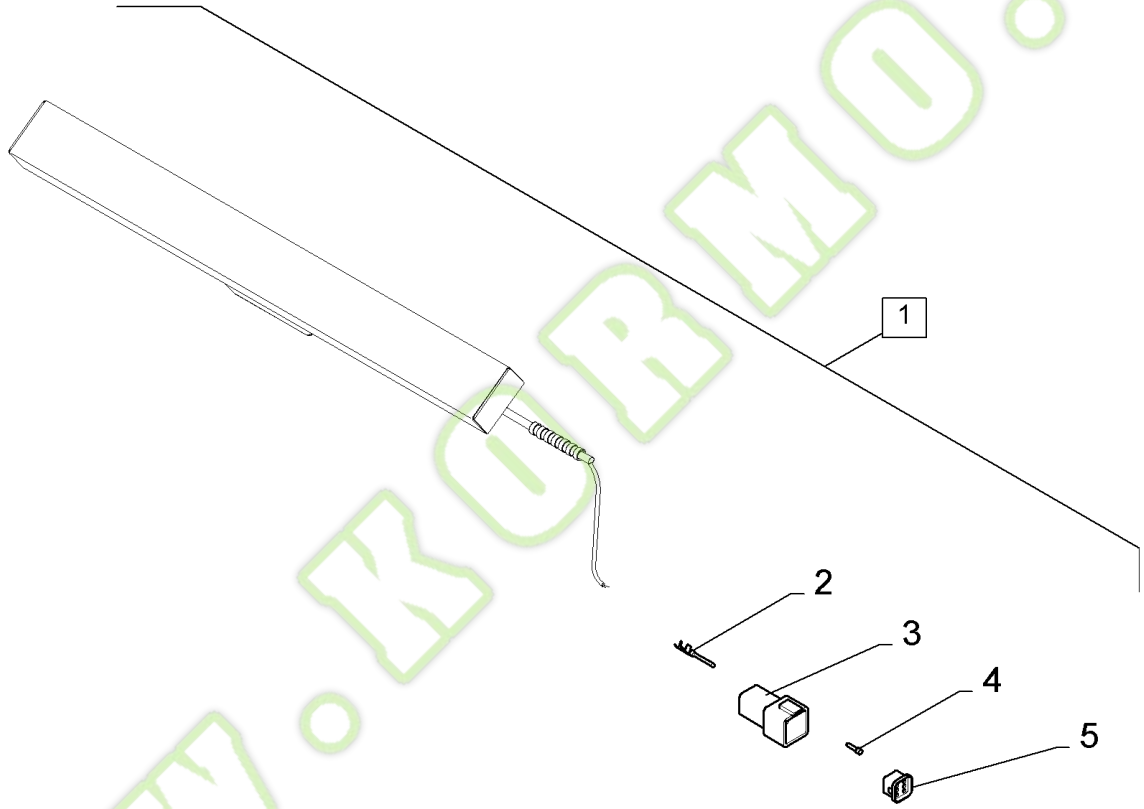

www.KOBMO.BY

13.68(01) METAL DETECTOR ASSEMBLY

Ref	Part Number	Qty	Description
1	84819173	1	DETECTOR, METAL, (2 to 5), BSN C277
1	84819174	1	DETECTOR, METAL, (2 to 5), BSN F278341
1	84800112	1	DETECTOR, METAL, (2 to 5), ASN D342
2	900363	5	TERMINAL, {PP:80900363} , BSN C277
2	86500035	5	TERMINAL, , ASN D278
3	84074642	1	CONNECTOR, WIRE,
4	84068583	1	PLUG,
5	89861378	1	PLUG,

WWW.KOBMO.BY

13.69(01) KNIFE SHARPENER

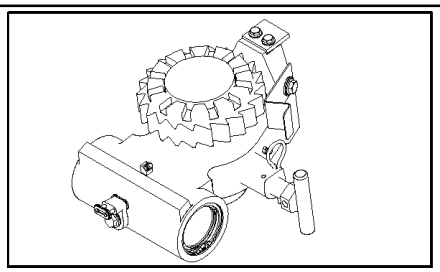

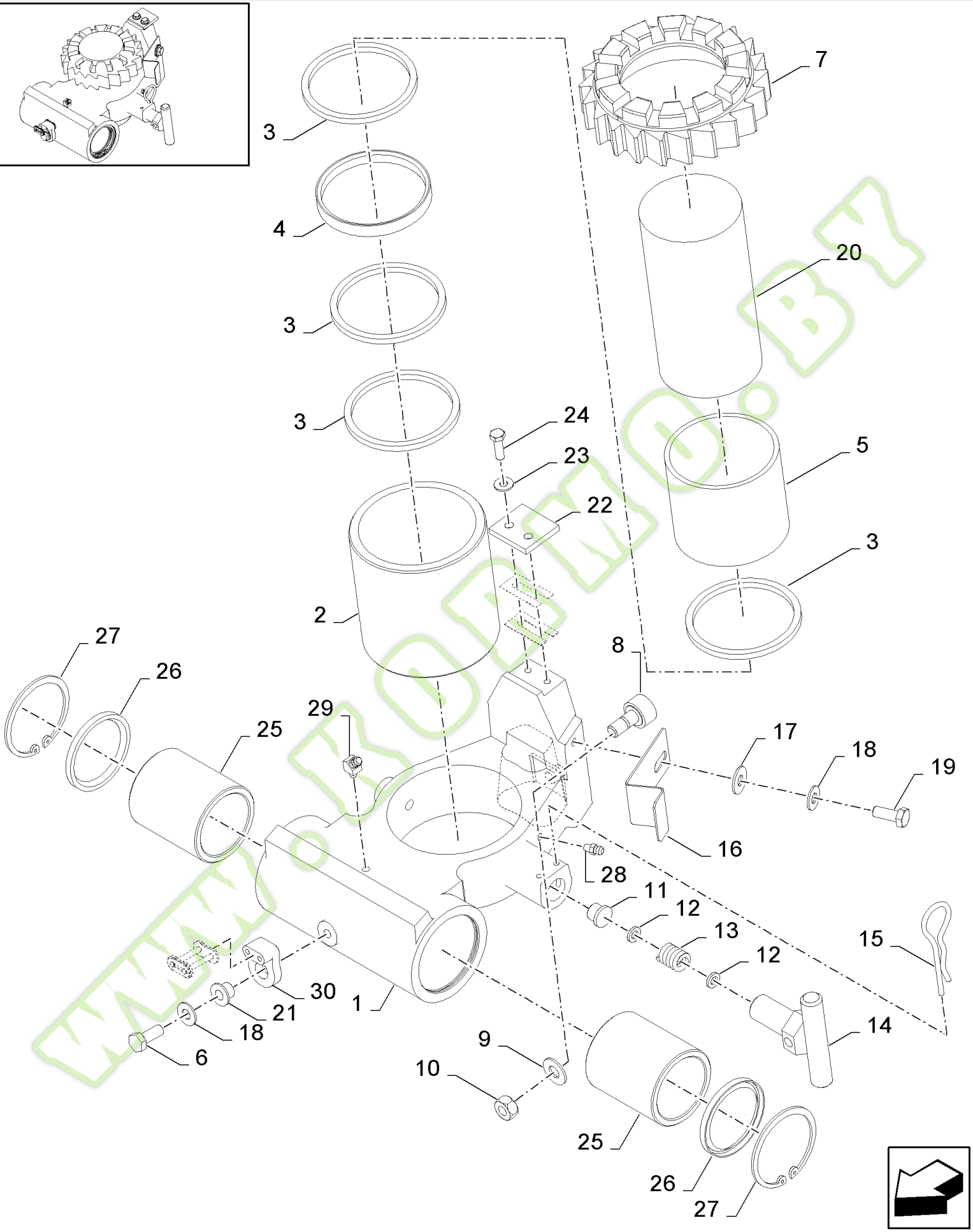

FX50 SELF-PROPELLED FORAGE HARVESTER (10/02-)

13.69(01) KNIFE SHARPENER

Ref	Part Number	Qty	Description
1	84004476	1	SUPPORT,
2	NH774493	1	HOLDER, {PP:80774493}
3	774490	4	RING, RUBBER, {PP:80774490}
4	774491	1	SHIM, {PP:80774491}
5	774492	1	SPACER, {PP:80774492}
6	84041541	1	SCREW, Hex, M8 x 20, 8.8, Full Thd,
7	84806519	1	HOUSING,
8	84004515	1	ROLLER,
9	140045	1	WASHER, LOCK, {PP:80140045} Belleville, M10, 10MM
10	84022934	1	NUT, M10 x 1, Cl 8, M10
11	788299	1	PLUG, {PP:80788299}
12	86588450	2	WASHER, M6, 6MM
13	29524	1	SPRING, {PP:80029524}
14	84004557	1	ROD,
15	86511448	1	PIN, SPLIT (COTTER),
16	9806478	1	CLIP, SPRING, {PP:89806478}
17	378243	1	WASHER, {PP:80378243} 8MM
18	322358	2	WASHER, LOCK, {PP:80322358} Belleville, M8, 8MM
19	80120104	1	SCREW, M8x20
20	84056379	1	GRINDSTONE,
20	84056378	1	GRINDSTONE, , FOR BUSATIS KNIVES ONLY, WITH YELLOW TOP SURFACE ONLY,SPECIFIC FOR CORN
21	9617010	1	SPACER, {PP:89617010}
22	84032606	1	PLATE, COVER,
23	322357	2	WASHER, LOCK, {PP:80322357} Belleville, M6, Belleville, M6
24	120100	2	BOLT, {PP:80120100} Hex, M6 x 20, 8.8, M6x20
25	697045	2	BEARING ASSY, {PP:80697045}
26	84014095	2	ELEMENT, SEALING,
27	370012	2	CIRCLIP, {PP:80370012}
28	321204	1	NIPPLE, LUBE, {PP:80321204}
29	84814929	1	NIPPLE, LUBE,
30	9620444	1	CONNECTOR, HYD., {PP:89620444}

www.KOBMO.BY

13.70(01) KNIFE SHARPENER

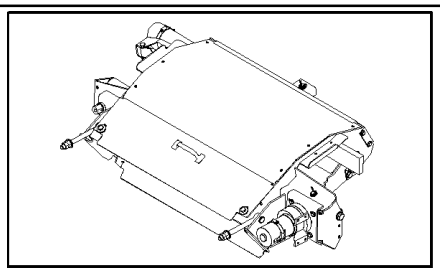

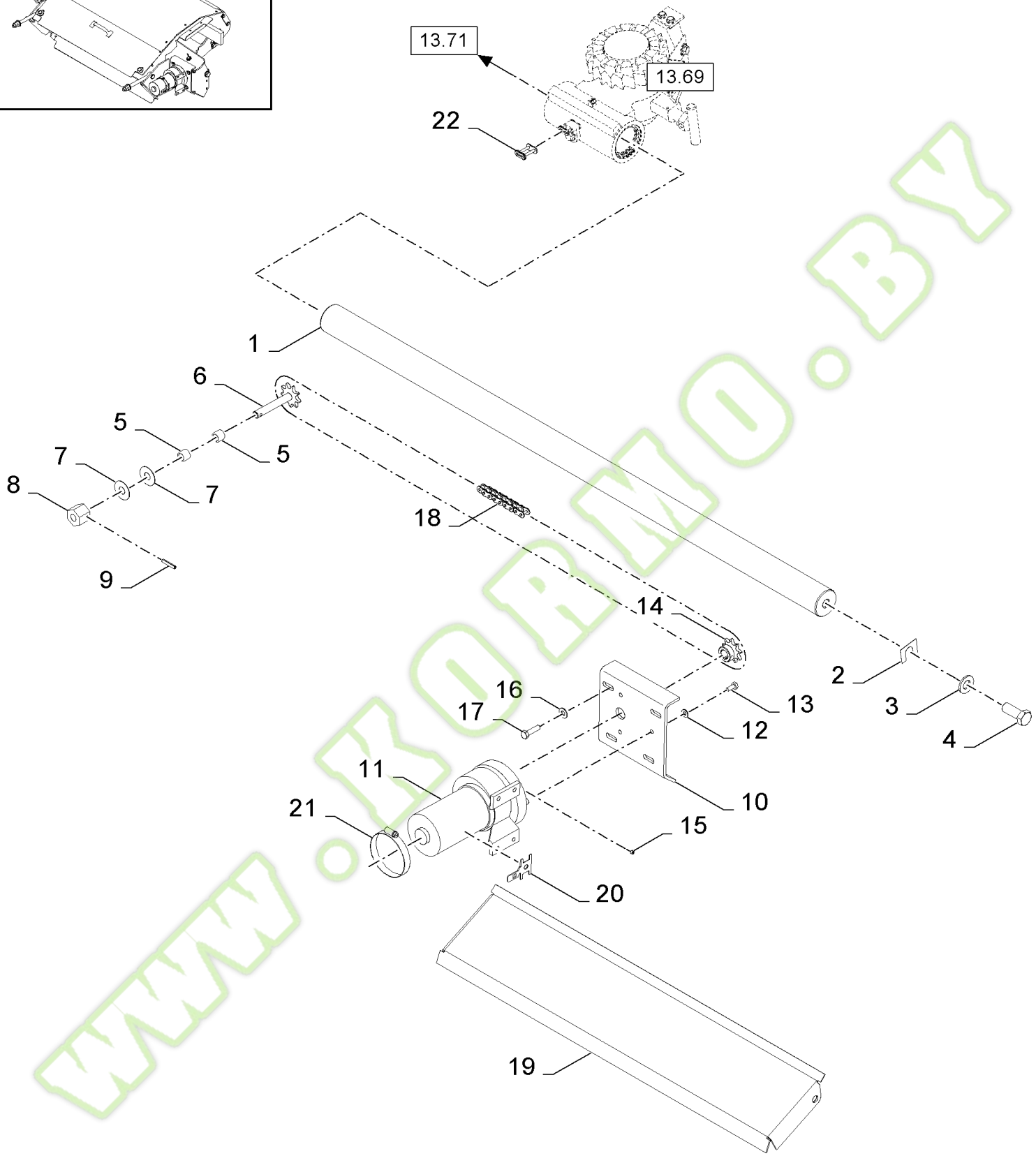

www.KOBMO.BY

FX50 SELF-PROPELLED FORAGE HARVESTER (10/02-)

13.70(01) KNIFE SHARPENER

Ref	Part Number	Qty	Description
1	89835162	1	SHAFT,
2	84022135	1	PLATE, ADJUSTING, THK.:0.3MM
3	140048	1	WASHER, LOCK, {PP:80140048} Belleville, M16, 16MM
4	43168	1	SCREW, {PP:80043168} Hex, M16 x 40, 8.8, Hex, M16 x 40, 8.8
5	791972	2	BEARING ASSY, {PP:80791972}
6	84000304	1	SPROCKET, DRIVEN,
7	791993	2	WASHER, {PP:80791993}
8	84015867	1	RING,
9	393871	1	PIN, ROLL, {PP:80393871} M5 x 30, Slotted,
10	89809223	1	SUPPORT,
11	84019727	1	MOTOR, ELECTRIC, SMALL,
12	322357	3	WASHER, LOCK, {PP:80322357} Belleville, M6, Belleville, M6
13	280641	3	SCREW, {PP:80280641} Hex, 1/4"-20 x 5/8", G5, Full Thd, 0.25"x0.625"
14	84017037	1	SPROCKET, DRIVEN,
15	84012755	3	SCREW, Hex Soc, M6 x 5,
16	322358	4	WASHER, LOCK, {PP:80322358} Belleville, M8, 8MM
17	43128	4	SCREW, {PP:80043128} Hex, M8 x 30, 8.8, Cap, HH, CL 8.8, M8 x 1.25 x 30
18	89835411	1	CHAIN,
19	89809704	1	PLATE, COVER,
20	84032700	1	SUPPORT,
21	381145	1	CLAMP, {PP:80381145}
22	9620443	1	LINK, CONNECTING, {PP:89620443}

www.KOBMO.BY

13.71(01) KNIFE SHARPENER

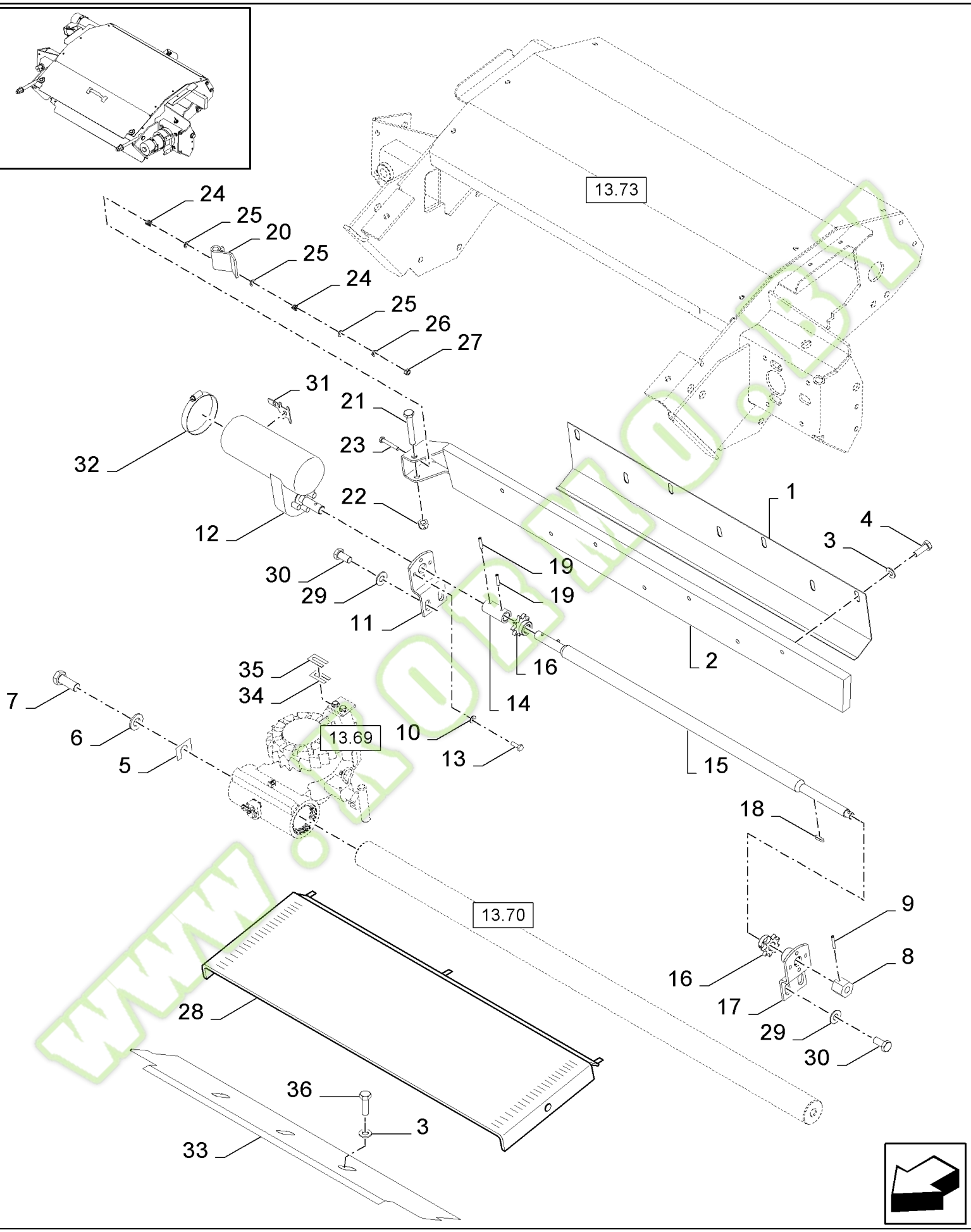

FX50 SELF-PROPELLED FORAGE HARVESTER (10/02-)

13.71(01) KNIFE SHARPENER

Ref	Part Number	Qty	Description
1	84031574	1	PLATE,
2	84032931	1	SUPPORT,
3	140045	10	WASHER, LOCK, {PP:80140045} Belleville, M10, 10MM
4	43140	7	BOLT, {PP:80043140} Hex, M10 x 30, 8.8, M10x30
5	84022135	1	PLATE, ADJUSTING, THK.:0.3MM
6	140048	1	WASHER, LOCK, {PP:80140048} Belleville, M16, 16MM
7	43168	1	SCREW, {PP:80043168} Hex, M16 x 40, 8.8, Hex, M16 x 40, 8.8
8	84015867	1	RING,
9	393871	1	PIN, ROLL, {PP:80393871} M5 x 30, Slotted,
10	322357	4	WASHER, LOCK, {PP:80322357} Belleville, M6, Belleville, M6
11	84017797	1	SUPPORT,
12	84019724	1	MOTOR, ELECTRIC, SMALL,
13	9707580	4	SCREW, {PP:89707580} Hex, 1/4"-20 x 3/4", G5, Full Thd, 0.25"x0.75"
14	84019855	1	BLOCK, COUPLING,
15	84068816	1	SHAFT,
16	84017038	2	SPROCKET, DRIVEN,
17	89809086	1	SUPPORT,
18	336126	2	KEY, {PP:80336126}
19	130045	2	PIN, {PP:80130045} M5 x 26, Slotted,
20	84043010	1	BRACKET,
22	100037	1	NUT, {PP:80100037} M10 x 1.5, Cl 8, M10
23	80043118	1	SCREW, Cap, HH, CL 8.8, M6 x 1 x 40
24	35674	2	SPRING, {PP:80035674}
25	130298	3	SHIM, {PP:80130298}
26	86588450	1	WASHER, M6, 6MM
27	353308	1	NUT, {PP:80353308} M6 x 1, Cl 8, M6
28	84068815	1	COVER,
29	140046	4	WASHER, LOCK, {PP:80140046} Belleville, M12, 12MM
30	300388	4	SCREW, {PP:80300388} Hex, M12 x 25, 8.8, M12x25
31	84032700	1	SUPPORT,
32	381145	1	CLAMP, {PP:80381145}
33	84038826	1	PLATE,
34	84022926	AR	PLATE, ADJUSTING, THK.:0.5MM
35	84022925	AR	PLATE, ADJUSTING, THK.:0.15MM
36	43138	3	SCREW, {PP:80043138} Hex, M10 x 20, 8.8, Full Thd, M10x20
21	43144	1	SCREW, {PP:80043144} Hex, M10 x 70, 8.8, M10x70

WWW.KOEMO.BY

13.72(01) CUTTERHEAD FRAME

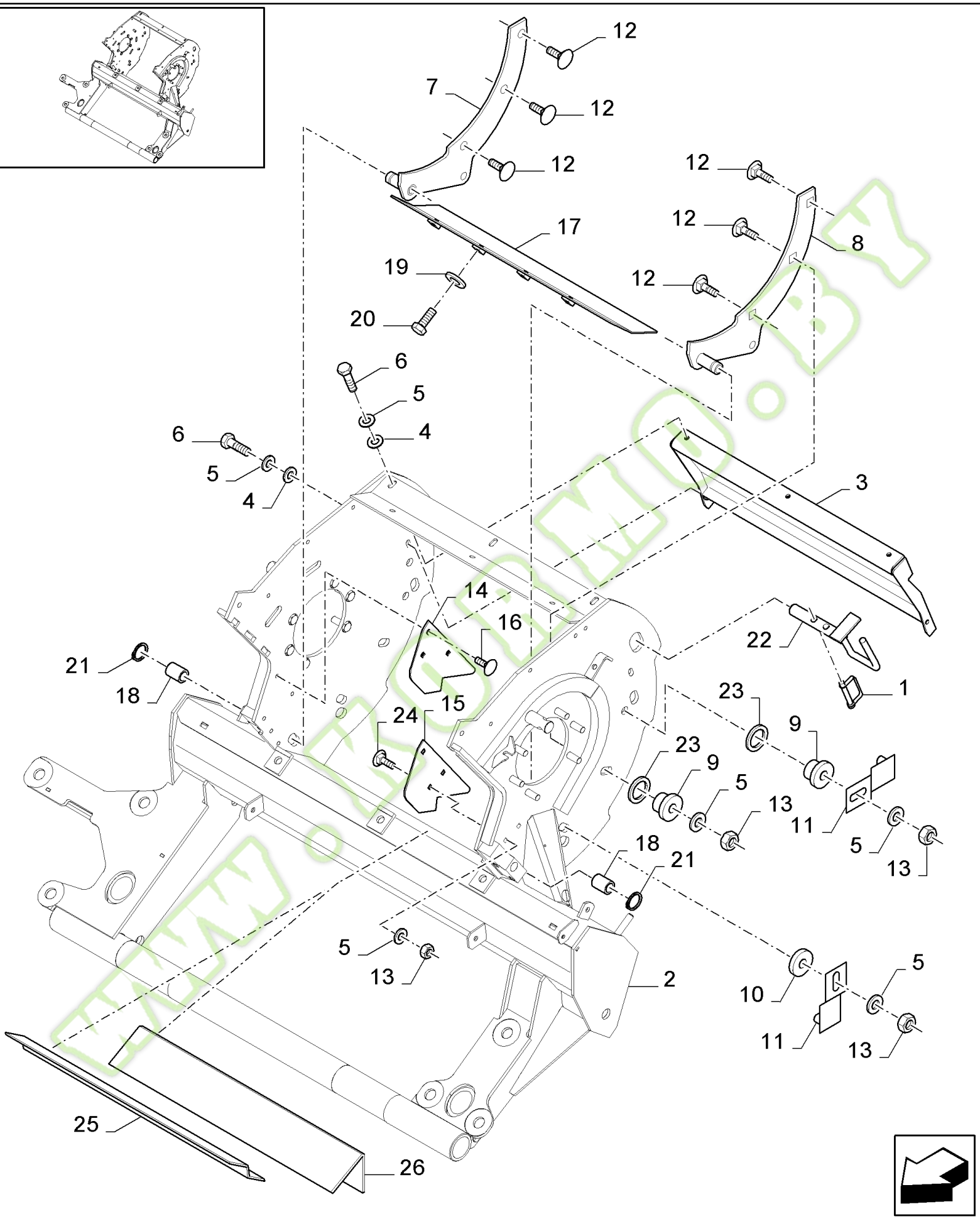

FX50 SELF-PROPELLED FORAGE HARVESTER (10/02-)

13.72(01) CUTTERHEAD FRAME

Ref	Part Number	Qty	Description
1	647695	1	PIN, {PP:80647695}
2	84442835	1	CUTTERHEAD, , BSN C291
2	84452176	1	CUTTERHEAD, , ASN D292
3	84075427	1	COVER,
4	378244	5	WASHER, LOCK, {PP:80378244} 10MM
5	140045	17	WASHER, LOCK, {PP:80140045} Belleville, M10, 10MM
6	43140	5	BOLT, {PP:80043140} Hex, M10 x 30, 8.8, M10x30
7	84058775	1	PROFILE, RH
8	84058776	1	PROFILE, LH
9	84012049	4	SPACER,
10	362810	2	WASHER, {PP:80362810}
11	84018137	4	COVER,
12	84018214	6	BOLT, M10x35
13	100016	12	NUT, {PP:80100016} M10, Cl 8, M10
14	84443814	1	PLATE, WEAR, RH
15	84443813	1	PLATE, WEAR, LH
16	62338	AR	BOLT, {PP:80062338}
17	84438302	1	PLATE, WEAR,
18	84446185	2	BUSHING,
19	84459706	4	WASHER,
20	120091	4	SCREW, {PP:80120091} Hex, M16 x 60, 8.8, Hex, M16 x 60, 8.8
21	80370002	2	CIRCLIP,
22	84806524	1	HANDLE,
23	140094	4	WASHER, {PP:80140094} , ASN D315
24	392127	AR	SCREW, {PP:80392127}
25	89835197	1	PLATE, , WELD ON, S-PLATE
26	84454341	1	SUPPORT, , WELD ON, "THE NOSE"

www.KUBMO.BY

13.73(01) KNIFE SHARPENER, SHIELDS

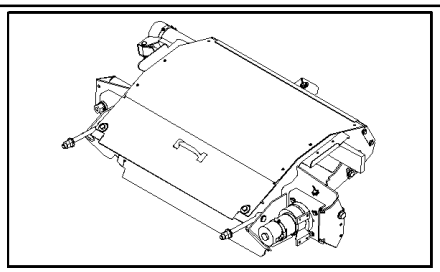

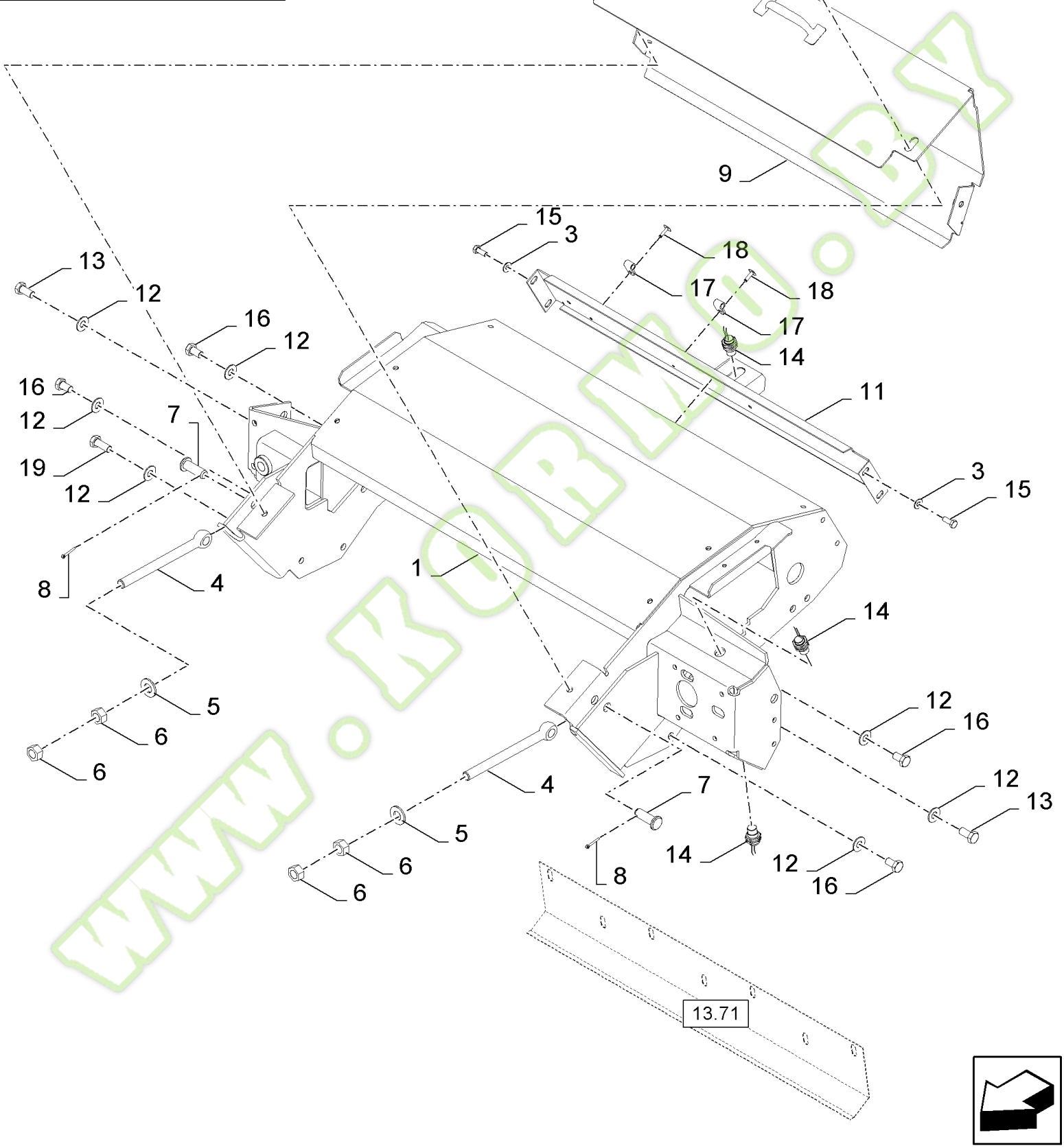

www.KOBMO.BY

FX50 SELF-PROPELLED FORAGE HARVESTER (10/02-)

13.73(01) KNIFE SHARPENER, SHIELDS

Ref	Part Number	Qty	Description
1	84789054	1	FRAME,
2	43140	2	BOLT, {PP:80043140} Hex, M10 x 30, 8.8, M10x30
3	322358	4	WASHER, LOCK, {PP:80322358} Belleville, M8, 8MM
4	84023279	2	BOLT,
5	378246	2	WASHER, {PP:80378246} 16MM
6	100020	4	NUT, {PP:80100020} M16, Cl 8, M16, Cl 8
7	390071	2	PIN, {PP:80390071}
8	130004	2	PIN, SPLIT (COTTER), {PP:80130004} M3.2 x 25,
9	84099487	1	COVER,
10	140042	2	WASHER, LOCK, {PP:80140042} M10 x 34 x 3, 10MM
11	84038827	1	COVER,
12	140046	7	WASHER, LOCK, {PP:80140046} Belleville, M12, 12MM
13	300388	2	SCREW, {PP:80300388} Hex, M12 x 25, 8.8, M12x25
14	84056994	3	SENSOR,
15	80120104	4	SCREW, M8x20
16	80043151	4	SCREW, M12x20
17	9507807	2	CLAMP, {PP:89507807}
18	9512290	2	RIVET, {PP:89512290}
19	9706687	1	SCREW, {PP:89706687} Hex, M12 x 30, 8.8, M12x30

www.KOBMO.BY

13.74(01) CUTTERHEAD SHIELDS, LH

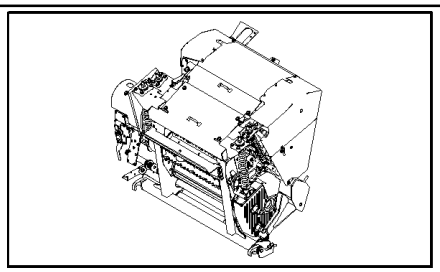

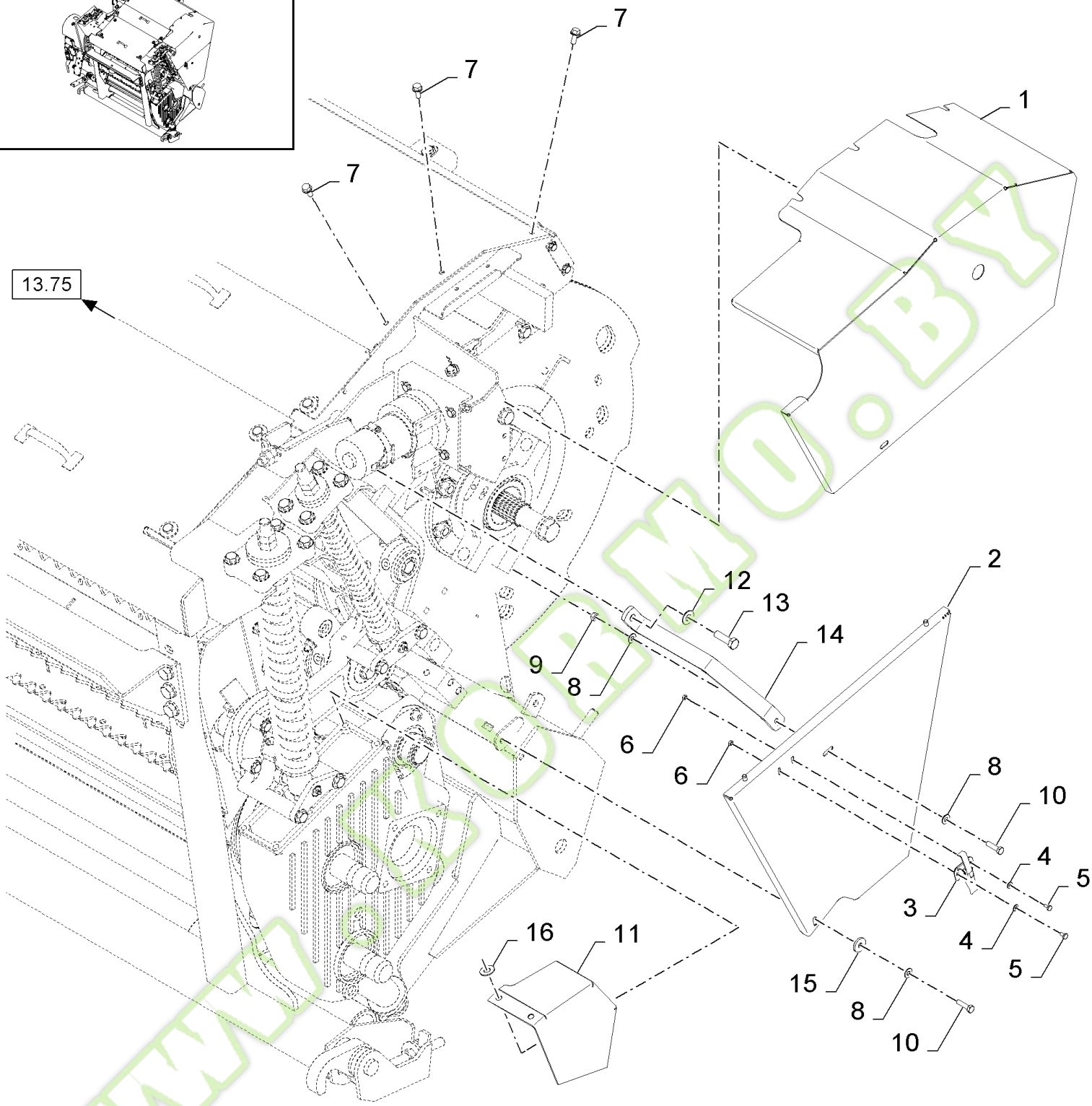

www.KOBMO.BY

FX50 SELF-PROPELLED FORAGE HARVESTER (10/02-)

13.74(01) CUTTERHEAD SHIELDS, LH

Ref	Part Number	Qty	Description
1	84099502	1	COVER,
2	84099488	1	COVER,
3	244457	1	CLAMP, {PP:80244457}
4	322356	2	WASHER, LOCK, {PP:80322356}
5	86585709	2	SCREW, Cross Pan Hd, M5 x 10, M5x10
6	86508813	2	NUT, M4, Cl 8, M5
7	391510	3	SCREW, {PP:80391510} M8x20
8	322358	3	WASHER, LOCK, {PP:80322358} Belleville, M8, 8MM
9	89706690	1	NUT, CL 8, M8 x 1.25 x 13.0
10	43128	2	SCREW, {PP:80043128} Hex, M8 x 30, 8.8, Cap, HH, CL 8.8, M8 x 1.25 x 30
11	84443922	1	SHIELD, LH
12	140046	1	WASHER, LOCK, {PP:80140046} Belleville, M12, 12MM
13	86629541	1	BOLT, Hex, M12 x 40, 8.8, Full Thd, M8x40
14	84447453	1	PLATE, COVER,
15	140041	1	WASHER, {PP:80140041} M8 x 28 x 3, 8MM
16	86592700	2	WASHER, M10 x 28 x 4, HT,

WWW.KOBMO.BY

13.75(01) CUTTERHEAD SHIELDS, RH

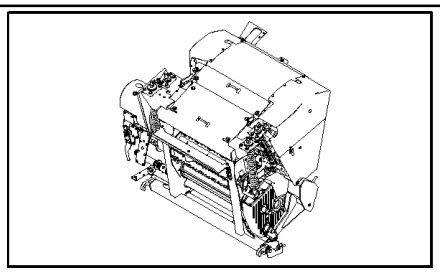

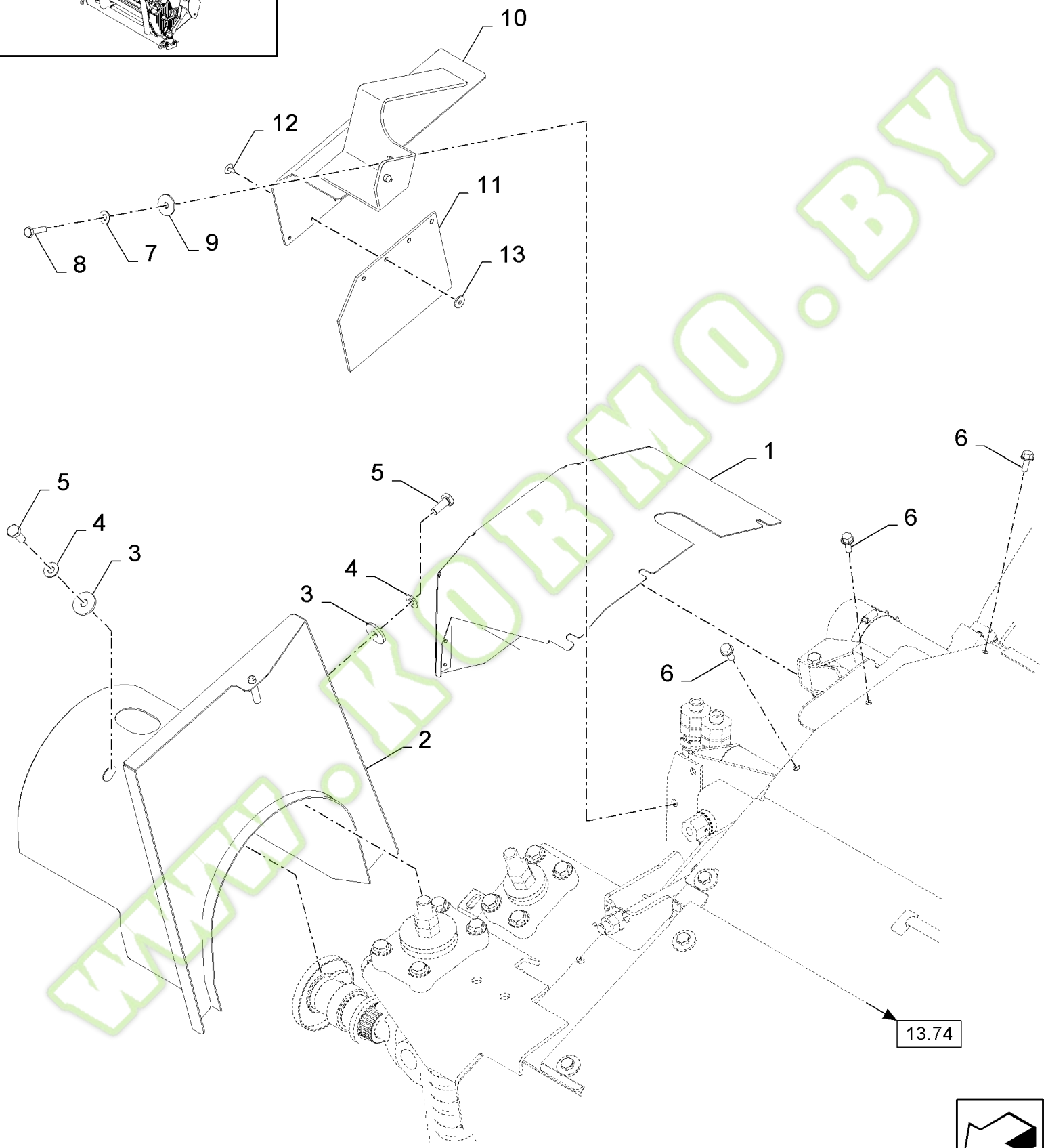

WWW.KOBMO.BY

FX50 SELF-PROPELLED FORAGE HARVESTER (10/02-)

13.75(01) CUTTERHEAD SHIELDS, RH

Ref	Part Number	Qty	Description
1	84043270	1	GUARD, RH
2	84443952	1	COVER, RH, NOT FOR NA, BSN C281
2	84449340	1	COVER, , ASN D282
3	9511052	2	WASHER, {PP:89511052} M12 x 44 x 4, 12MM
4	140046	2	WASHER, LOCK, {PP:80140046} Belleville, M12, 12MM
5	300388	2	SCREW, {PP:80300388} Hex, M12 x 25, 8.8, M12x25
6	391510	3	SCREW, {PP:80391510} M8x20
7	322358	1	WASHER, LOCK, {PP:80322358} Belleville, M8, 8MM
8	43128	1	SCREW, {PP:80043128} Hex, M8 x 30, 8.8, Cap, HH, CL 8.8, M8 x 1.25 x 30
9	140075	1	WASHER, {PP:80140075}
10	84056431	1	GUARD,
11	84056437	1	CANVAS,
12	NS	4	NOT SERVICED,
13	140182	4	WASHER, {PP:80140182} M5 x 18 x 2,

WWW.KOBMO.BY

13.76(01) CUTTERHEAD ACCESSORIES

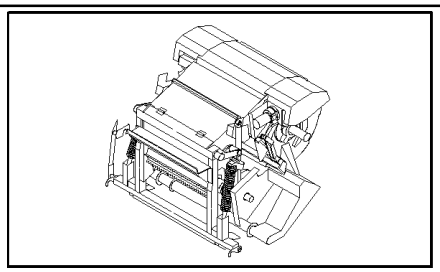

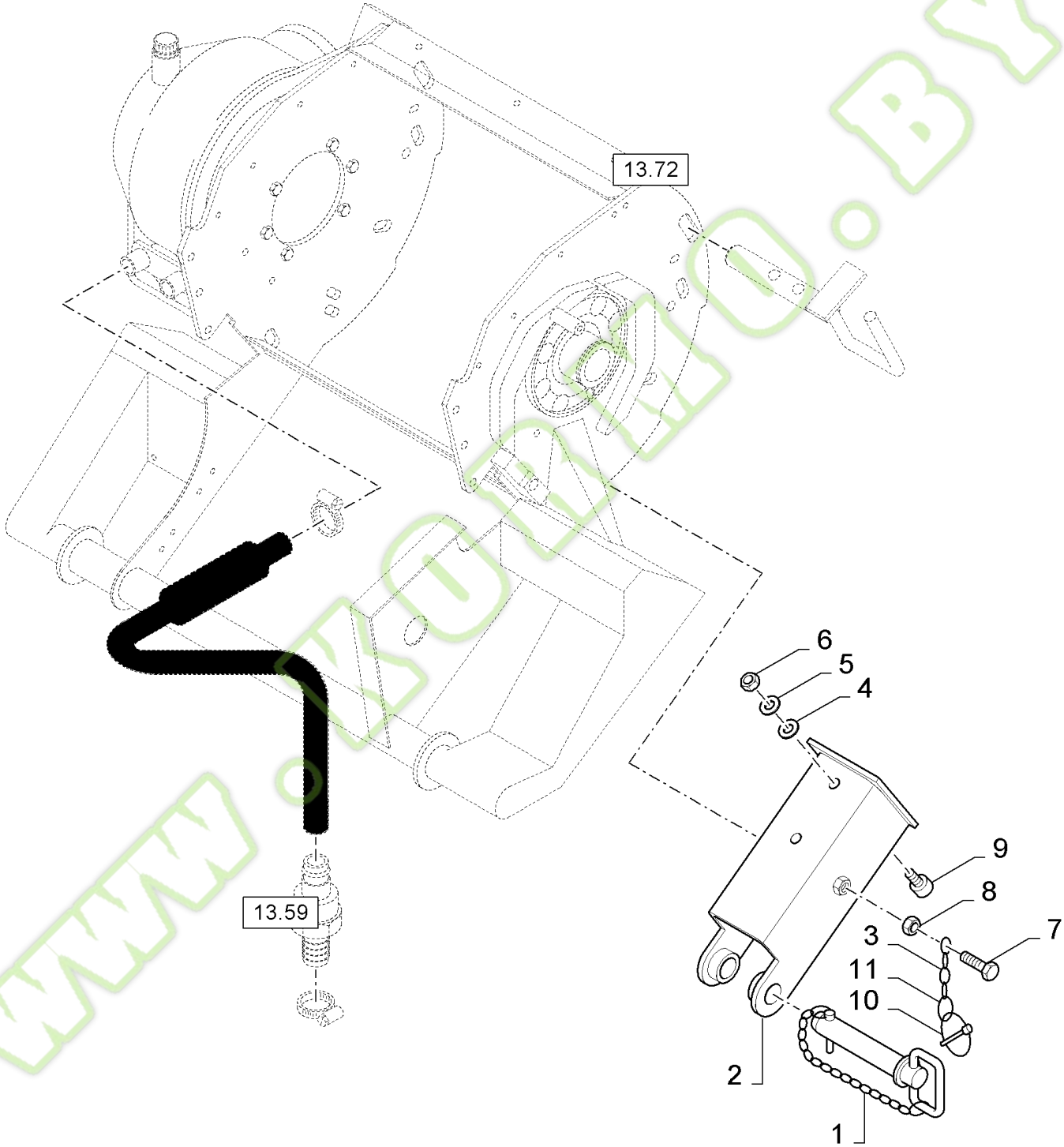

www.komo.by

FX50 SELF-PROPELLED FORAGE HARVESTER (10/02-)

13.76(01) CUTTERHEAD ACCESSORIES

Ref	Part Number	Qty	Description
1	84014750	2	PIN,
2	84042542	2	SUPPORT, , FOR NOT NA MACHINES, WITHOUT CROP PRO PLUS
2	84435093	2	COVER, , FOR NA ONLY OR WITH CROP PRO PLUS
3	9506868	2	CHAIN, {PP:89506868}
4	140015	2	WASHER, {PP:80140015}
5	322357	2	WASHER, LOCK, {PP:80322357} Belleville, M6, Belleville, M6
6	9706755	4	NUT, {PP:89706755} M6, Cl 8, M6
7	9706717	2	SCREW, {PP:89706717} Hex, M12 x 70, 8.8, Full Thd, Hex, M12 x 70, 8.8, Full Thd
8	89706685	2	NUT, M12
9	916454	2	DAMPER, {PP:80916454}
10	84021024	2	PIN, ROLL,
11	354957	2	HOOK, {PP:80354957}

www.KOBMO.BY

13.77(01) GRASS PLATE

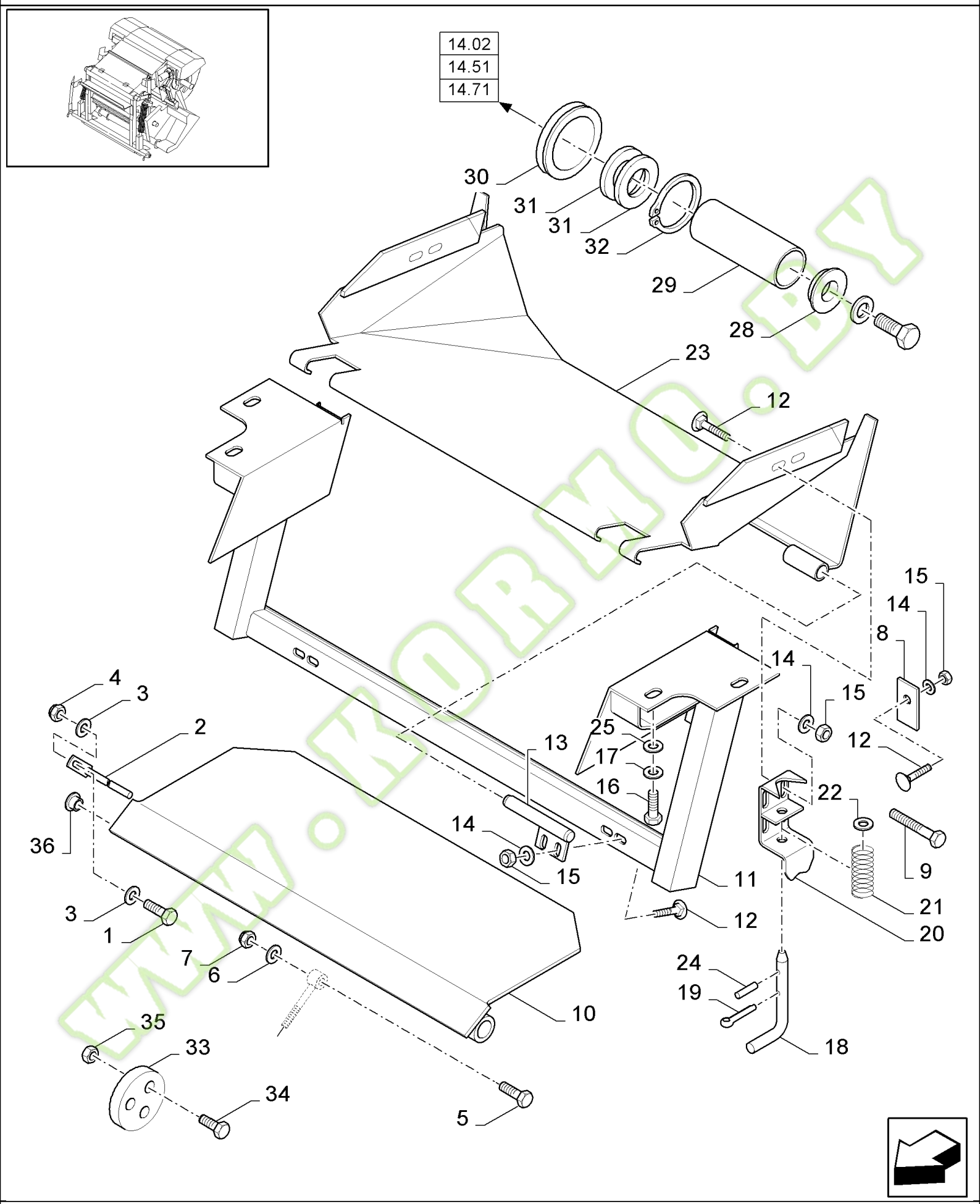

FX50 SELF-PROPELLED FORAGE HARVESTER (10/02-)

13.77(01) GRASS PLATE

Ref	Part Number	Qty	Description
1	9706687	2	SCREW, {PP:89706687} Hex, M12 x 30, 8.8, M12x30
2	84045688	2	PIN,
3	140046	4	WASHER, LOCK, {PP:80140046} Belleville, M12, 12MM
4	89706685	2	NUT, M12
5	9706704	1	BOLT, {PP:89706704} Hex, M10 x 35, 8.8, Full Thd, M10x35
6	378244	1	WASHER, LOCK, {PP:80378244} 10MM
7	100037	1	NUT, {PP:80100037} M10 x 1.5, Cl 8, M10
8	84069989	AR	PLATE, ADJUSTING, , TO REPLACE CROP PRO PLUS TM
9	43130	2	SCREW, {PP:80043130} Hex, M8 x 50, 8.8, M8x50, TO REPLACE CROP PRO PLUS TM
10	84441105	1	PLATE, , BSN C305
10	84790412	1	PLATE, , ASN D306
10	84432602	1	PLATE, , TO REPLACE CROP PRO PLUS TM, ASN D306
11	84814878	1	FRAME,
11	84334440	1	FRAME, , TO REPLACE CROP PRO PLUS TM
12	86507486	AR	BOLT (CARRIAGE), Short NK, M8 x 20, Cl8.8, Full Thd, M8x20
13	84014619	2	HINGE,
14	322358	AR	WASHER, LOCK, {PP:80322358} Belleville, M8, 8MM
15	89706690	AR	NUT, CL 8, M8 x 1.25 x 13.0
16	43167	4	BOLT, {PP:80043167} Hex, M16 x 30, 8.8, Full Thd, Hex, M16 x 30, 8.8, Full Thd
17	140048	4	WASHER, LOCK, {PP:80140048} Belleville, M16, 16MM
18	84014616	2	HANDLE, CRANKED,
19	130004	2	PIN, SPLIT (COTTER), {PP:80130004} M3.2 x 25,
20	84017507	2	GUIDE,
21	226829	2	SPRING, {PP:80226829}
22	86511324	2	WASHER, M12 x 24 x 2.5, 12MM
23	84443057	1	PLATE, , BSN C305
23	84005239	1	PLATE, , ASN D306
24	370539	2	PIN, SPLIT (COTTER), {PP:80370539}
25	337522	4	WASHER, LOCK, {PP:80337522} M16 x 56 x 5,
28	84015775	1	RING,
29	84068399	1	BUSHING, , BSN C269
29	84446261	1	BUSHING, , ASN D270
30	84068419	1	RING,
31	84068394	AR	SHIM, THK.:0.5MM
32	300636	1	CIRCLIP, {PP:80300636}
33	84435498	2	COVER, , TO REPLACE CROP PRO PLUS TM
34	43139	6	SCREW, {PP:80043139} Hex, M10 x 25, 8.8, Full Thd, M10x25
35	140045	6	WASHER, LOCK, {PP:80140045} Belleville, M10, 10MM
36	355551	2	PLUG, {PP:80355551}

WWW.KOBMO.BY

13.78(01) GRAIN SAVER PAN

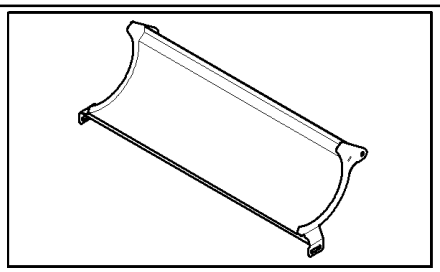

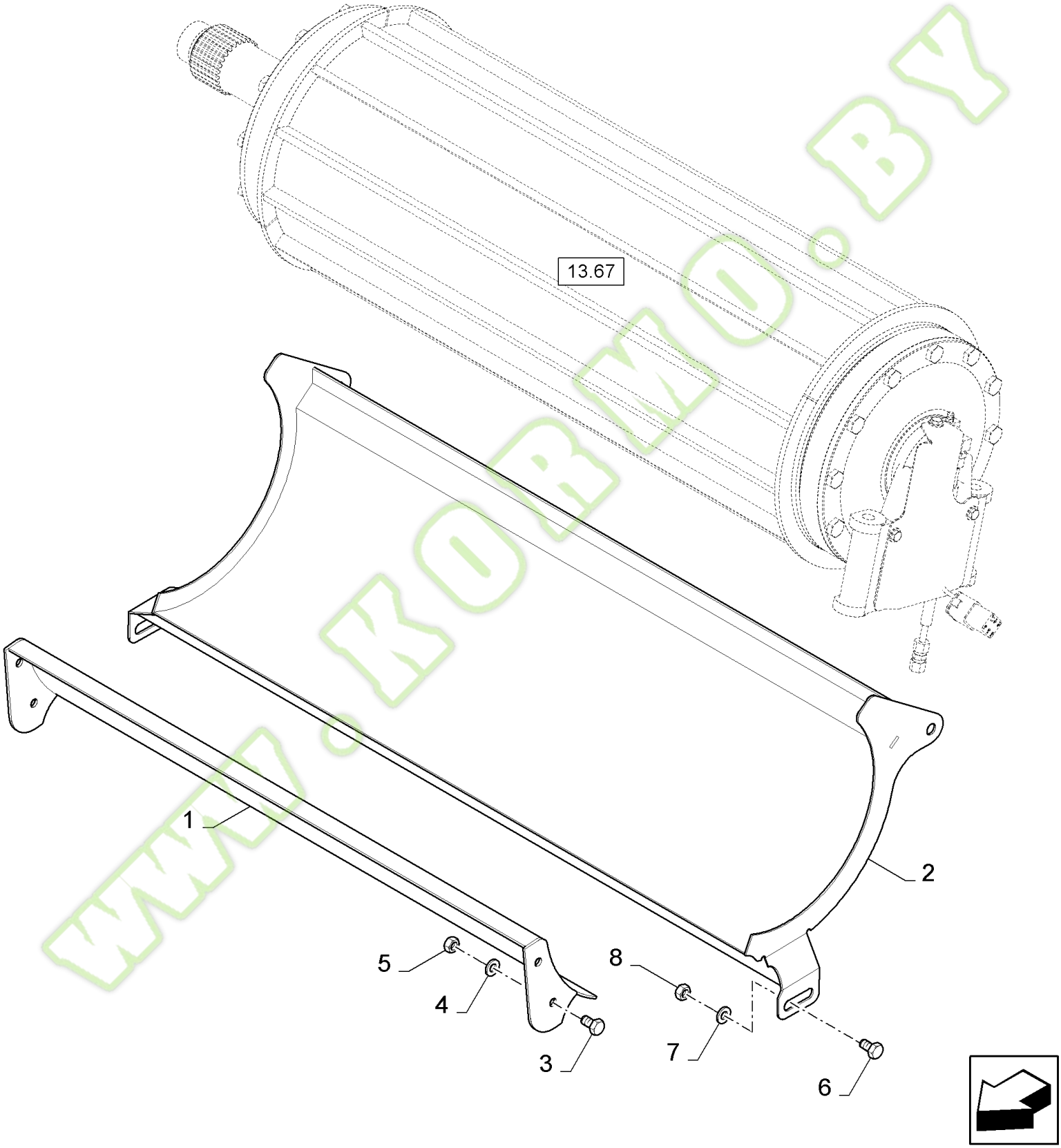

www.KOBMO.BY

FX50 SELF-PROPELLED FORAGE HARVESTER (10/02-)

13.78(01) GRAIN SAVER PAN

Ref	Part Number	Qty	Description
	84101551	AR	DIA KIT, HARVESTER, Includes Ref. 1 thru 8
1	84444803	1	PLATE,
2	84444802	1	PLATE,
3	120041	4	BOLT, {PP:80120041} Short NK, M10 x 20, Cl8.8, Full Thd, M10x20
4	140045	4	WASHER, LOCK, {PP:80140045} Belleville, M10, 10MM
5	100016	4	NUT, {PP:80100016} M10, Cl 8, M10
6	9706687	4	SCREW, {PP:89706687} Hex, M12 x 30, 8.8, M12x30
7	140046	8	WASHER, LOCK, {PP:80140046} Belleville, M12, 12MM
8	89706685	4	NUT, M12

www.KOBMO.BY

13.79(01) RECUTTER SCREEN

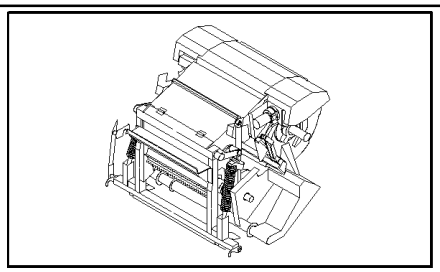

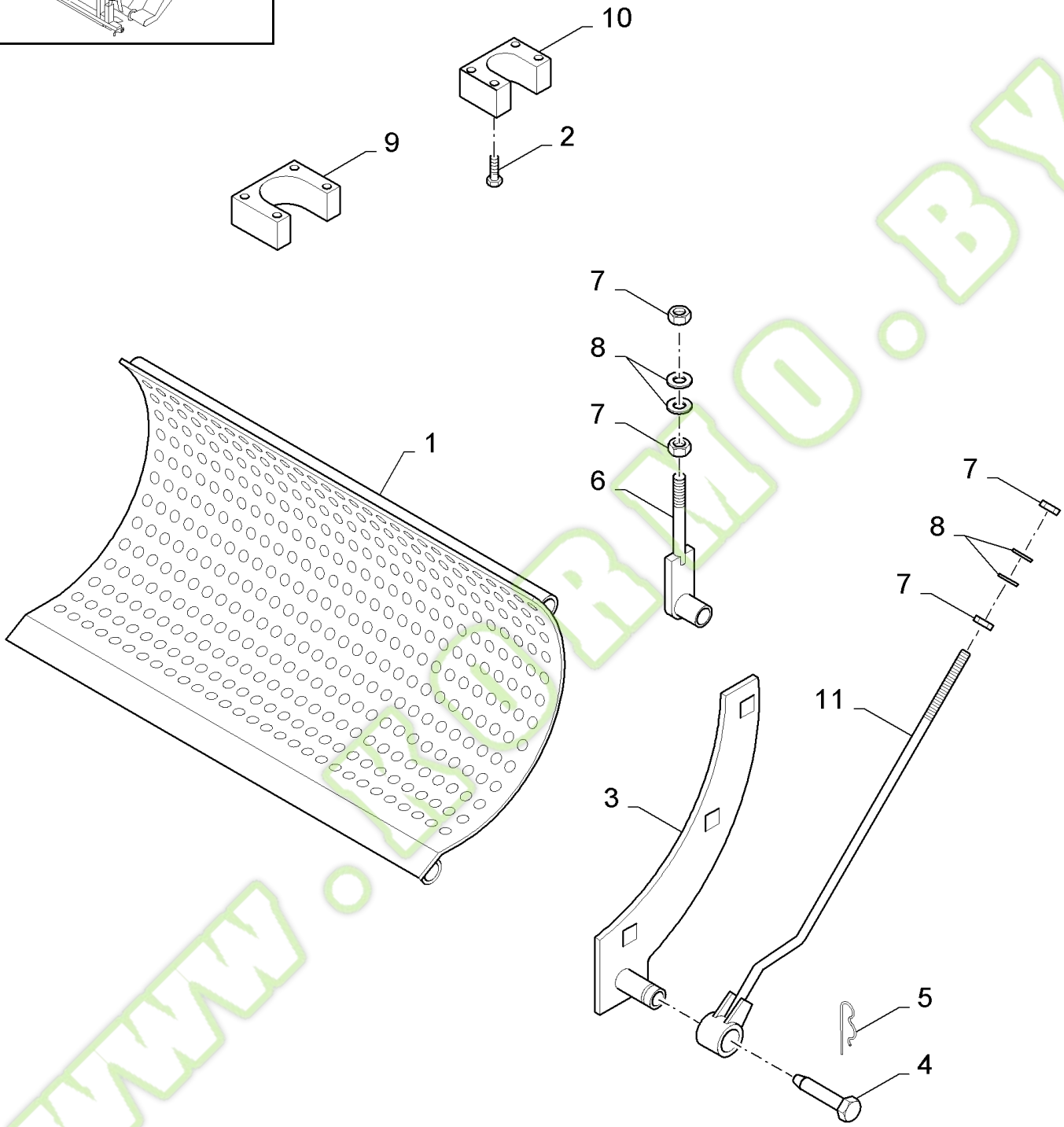

www.KUBMO.BY

FX50 SELF-PROPELLED FORAGE HARVESTER (10/02-)

13.79(01) RECUTTER SCREEN

Ref	Part Number	Qty	Description
1	84032280	1	SCREEN, 25.4x152.4MM
1	84032281	1	SCREEN, 28x145MM
1	84032282	1	SCREEN, 32x145MM
1	84032283	1	SCREEN, 35x145MM
1	84032284	1	SCREEN, 38x145MM
1	84032285	1	SCREEN, 41x145MM
1	84037798	1	SCREEN, 75x170MM
1	84037801	1	SCREEN, 25.4MM
1	84037802	1	SCREEN, 3/4", FOR NA ONLY
1	84037800	1	SCREEN, 1 1/4", FOR NA ONLY
1	84037797	1	SCREEN, 1 3/4"x3", FOR NA ONLY
1	84037799	1	SCREEN, 2 1/4"x6 1/8", FOR NA ONLY
2	86562594	8	BOLT, Hex, M12 x 110, 8.8, M12x110
3	84058780	1	PROFILE, LH
3	84058779	1	PROFILE, RH
4	84032273	4	PIN,
5	740591	4	PIN, SPLIT (COTTER), {PP:80740591}
6	84032251	2	ADJUSTER,
7	89706685	8	NUT, M12
8	140046	16	WASHER, LOCK, {PP:80140046} Belleville, M12,
9	84442840	1	SPACER,
10	84442842	1	SPACER,
11	84443593	2	TIE-ROD,

www.KOBMO.BY

13.80(01) KNIFE PLATE

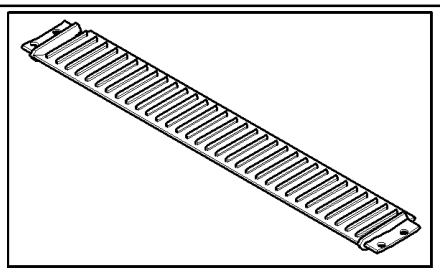

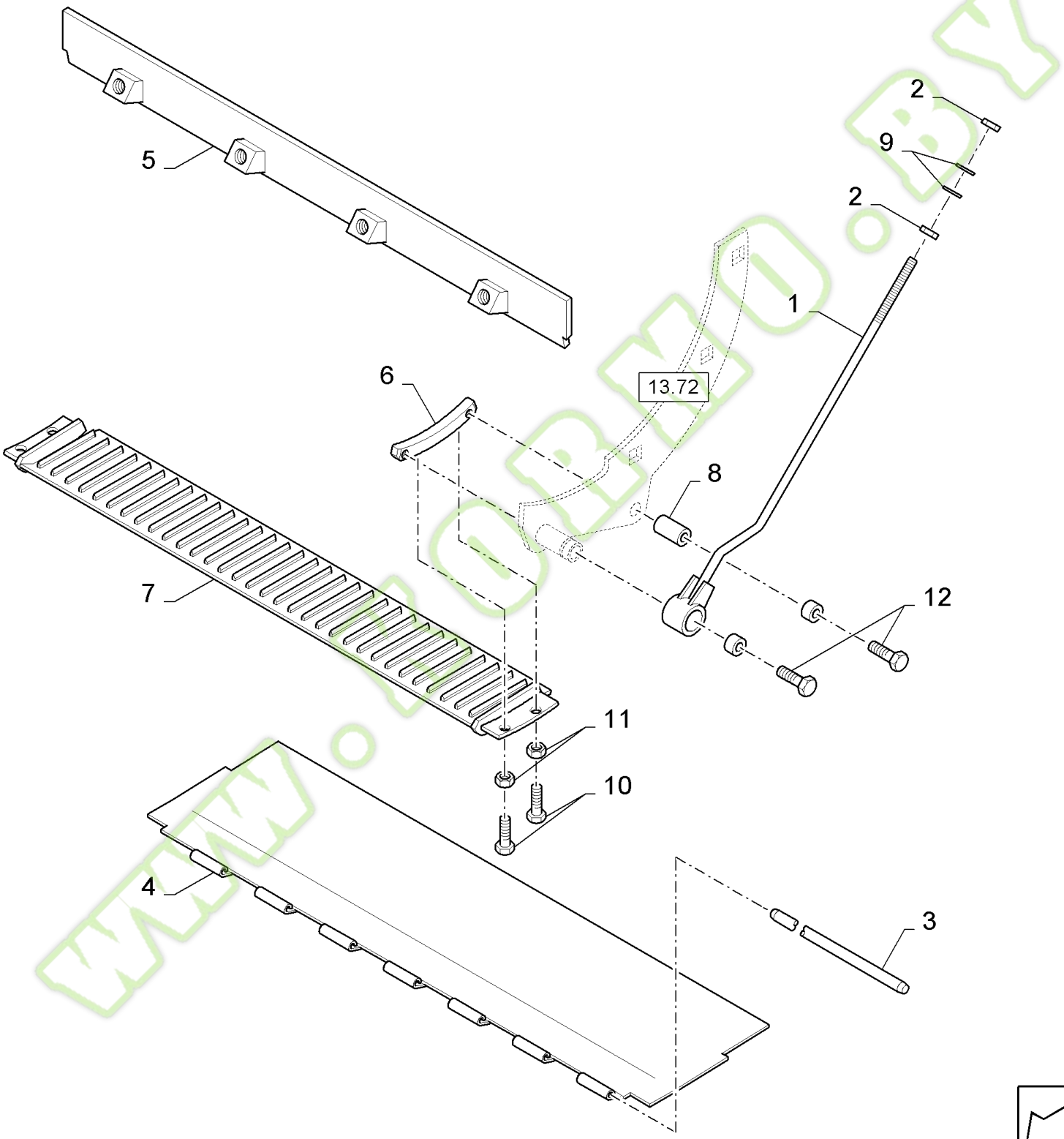

www.ROBO.BY

FX50 SELF-PROPELLED FORAGE HARVESTER (10/02-)

13.80(01) KNIFE PLATE

Ref	Part Number	Qty	Description
1	84443593	2	TIE-ROD,
2	89706685	4	NUT, M12
3	84053194	1	PIN,
4	84438301	1	PLATE,
5	84438302	1	PLATE, WEAR,
6	84012059	2	SUPPORT,
7	84056777	1	PLATE, , WITH KNIVES
8	84022728	2	BUSHING,
9	140046	4	WASHER, LOCK, {PP:80140046} Belleville, M12, 12MM
10	43138	4	SCREW, {PP:80043138} Hex, M10 x 20, 8.8, Full Thd, M12x20
11	412655	4	WASHER, LOCK, {PP:80412655} Belleville, M10, 10MM
12	120093	4	SCREW, {PP:80120093} Hex, M16 x 80, 8.8, Hex, M16 x 80, 8.8
13	394631	4	WASHER, {PP:80394631}

www.KOBMO.BY

CROP PROCESSOR	CROP PROCESSOR	CROP PROCESSOR	CROP PROCESSOR
CROP PROCESSOR	CROP PROCESSOR	CROP PROCESSOR	CROP PROCESSOR

SEC. 14

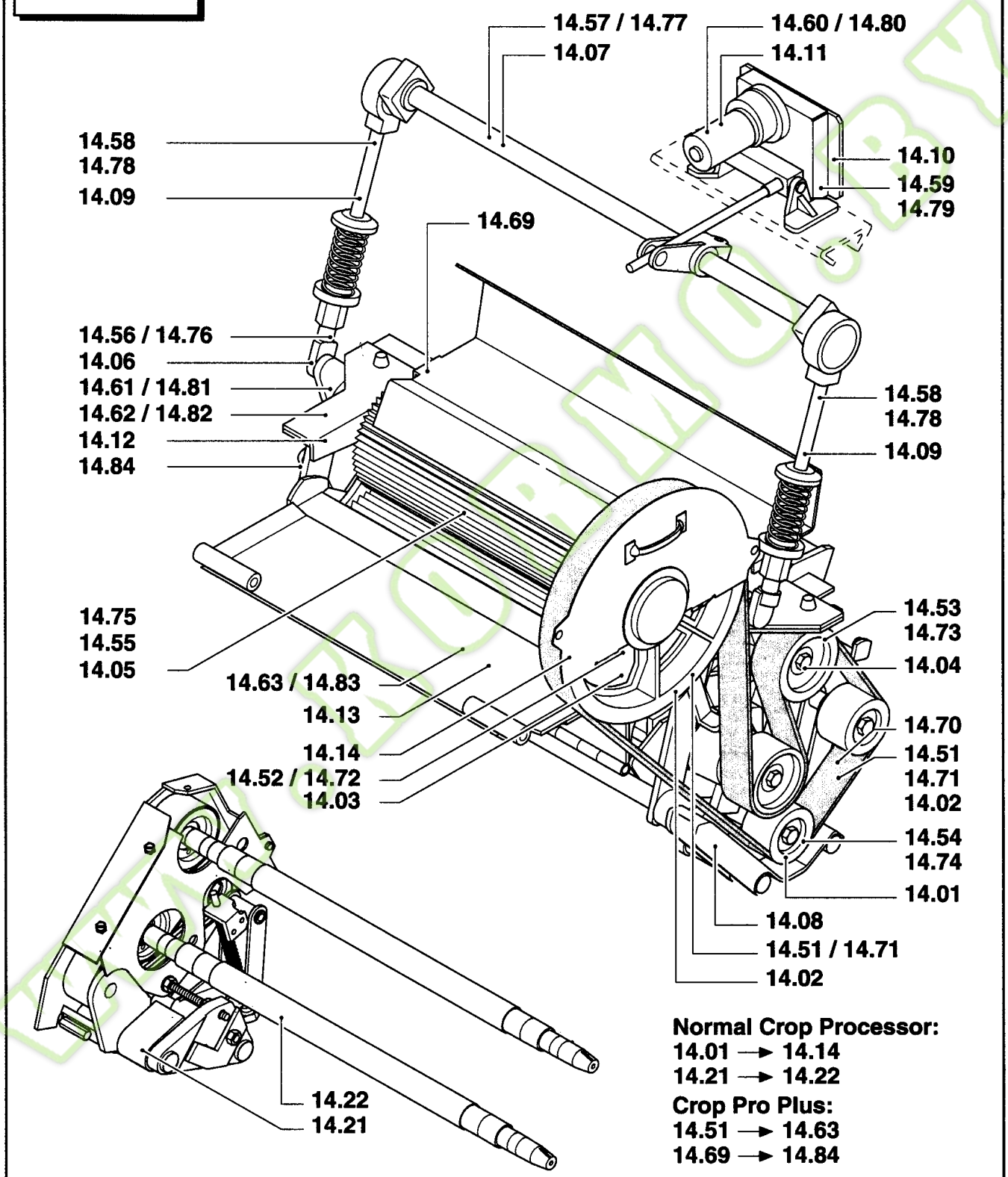

Normal Crop Processor:
14.01 → 14.14
14.21 → 14.22

Crop Pro Plus:
14.51 → 14.63
14.69 → 14.84

14.000(01) SECTION LIST 14

Ref	Part Number	Qty	Description

www.KOBMO.BY

14.01(01) DRIVE

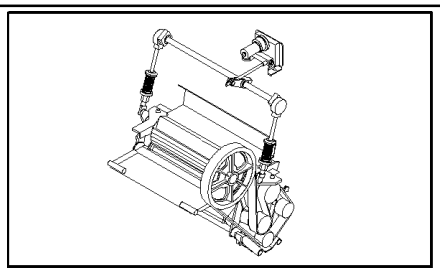

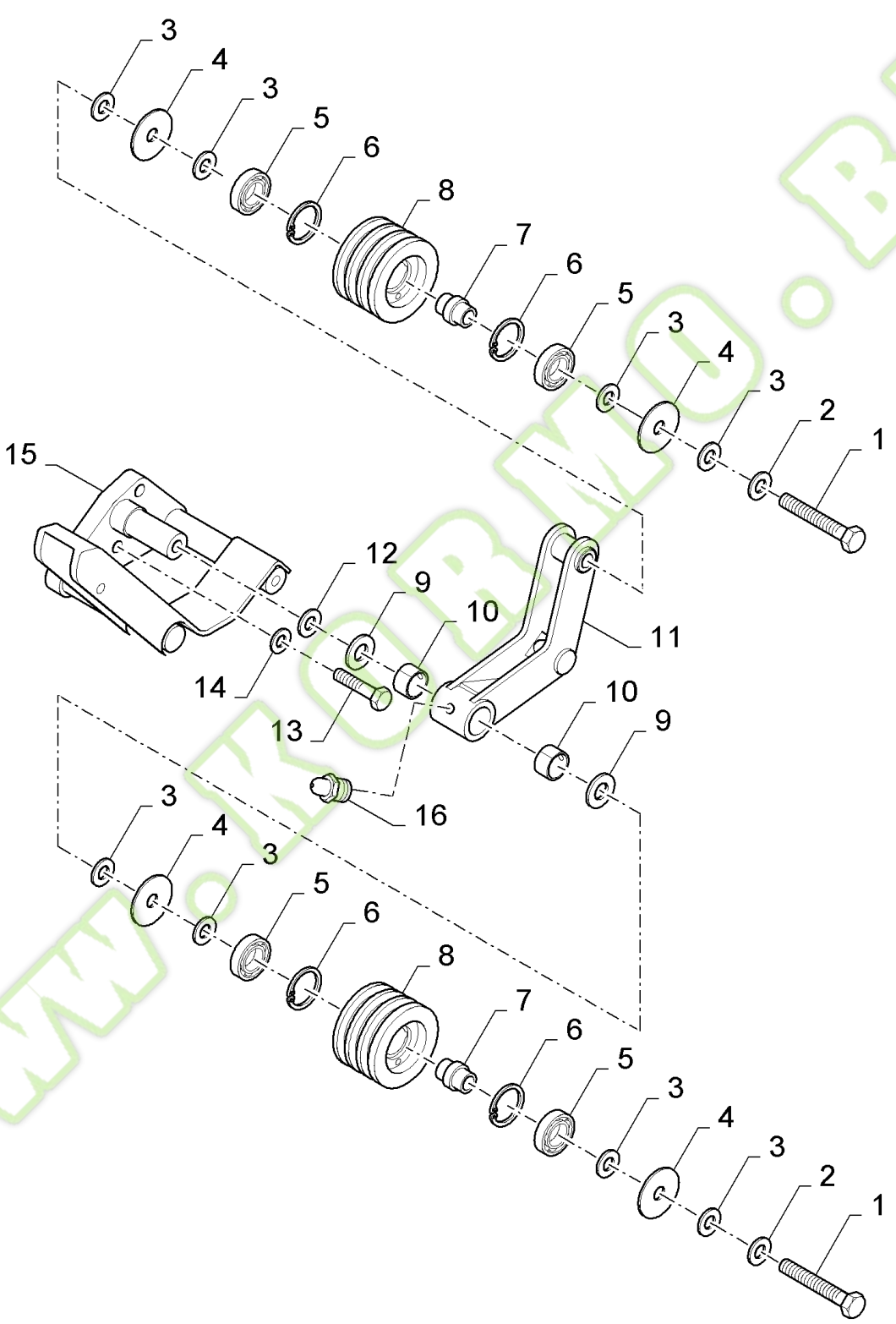

www.KOBMO.BY

FX50 SELF-PROPELLED FORAGE HARVESTER (10/02-)

14.01(01) DRIVE

Ref	Part Number	Qty	Description
1	350616	2	SCREW, {PP:80350616} Hex, M16 x 90, 8.8, M16x90
2	140048	2	WASHER, LOCK, {PP:80140048} Belleville, M16, 16MM
3	378246	8	WASHER, {PP:80378246}
4	84017220	4	WASHER,
5	443898	4	BEARING ASSY, {PP:80443898}
6	370011	4	CIRCLIP, {PP:80370011}
7	84017221	2	BUSHING,
8	84000844	2	PULLEY,
9	9838356	2	WASHER, {PP:89838356}
10	420434	2	BUSHING, {PP:80420434}
11	84056351	1	LEVER, , BSN C291
11	84819456	1	SUPPORT, , ASN D292
12	140108	1	WASHER, {PP:80140108}
13	80337563	2	SCREW, M12x40
14	140046	2	WASHER, LOCK, {PP:80140046} Belleville, M12, 12MM
15	84015258	1	SUPPORT,
16	9838669	1	NIPPLE, LUBE, {PP:89838669}

www.KOBMO.BY

14.02(01) DRIVE

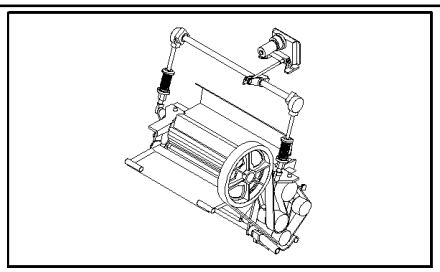

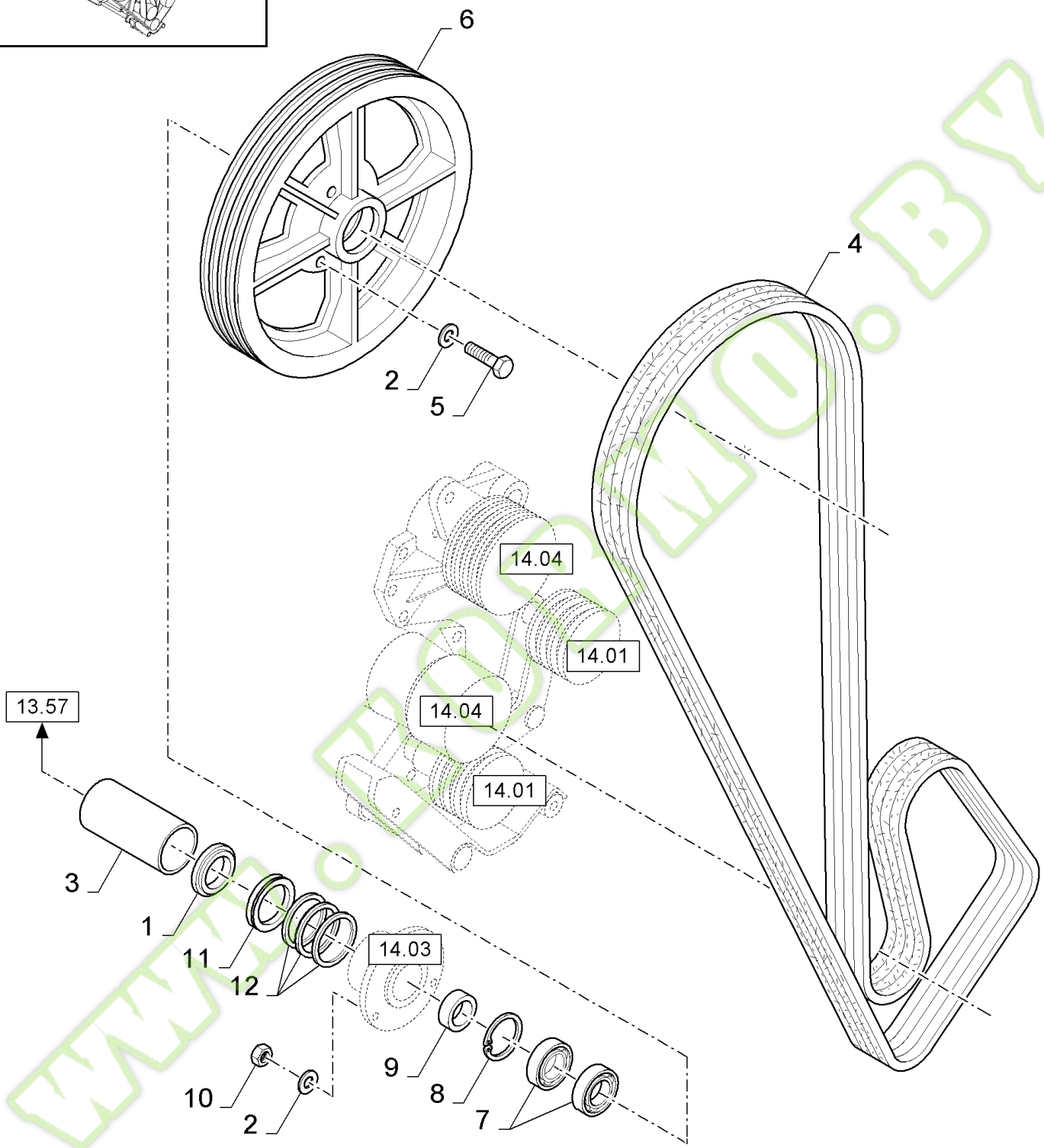

www.tomoby

FX50 SELF-PROPELLED FORAGE HARVESTER (10/02-)

14.02(01) DRIVE

Ref	Part Number	Qty	Description
1	84077930	1	RING,
2	140045	3	WASHER, LOCK, {PP:80140045} Belleville, M10, 10MM
3	84068398	1	BUSHING, , BSN C269
3	84446250	1	BUSHING, , ASN D270
4	84026761	1	SET OF BELTS,
4	84435248	1	BELT, TRANSMISSION,
5	120068	3	SCREW, {PP:80120068} Hex, M10 x 40, 8.8, Full Thd, M10x40
6	84012003	1	PULLEY,
7	84438926	2	BEARING, BALL,
8	370018	1	RING, SNAP, {PP:80370018}
9	84015773	1	SPACER,
10	100016	3	NUT, {PP:80100016} M10, Cl 8, M10
11	84068419	1	RING,
12	84068394	3	SHIM, THK.:0.5MM

www.KOBMO.BY

14.03(01) CLUTCH

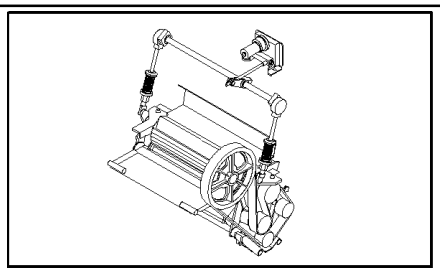

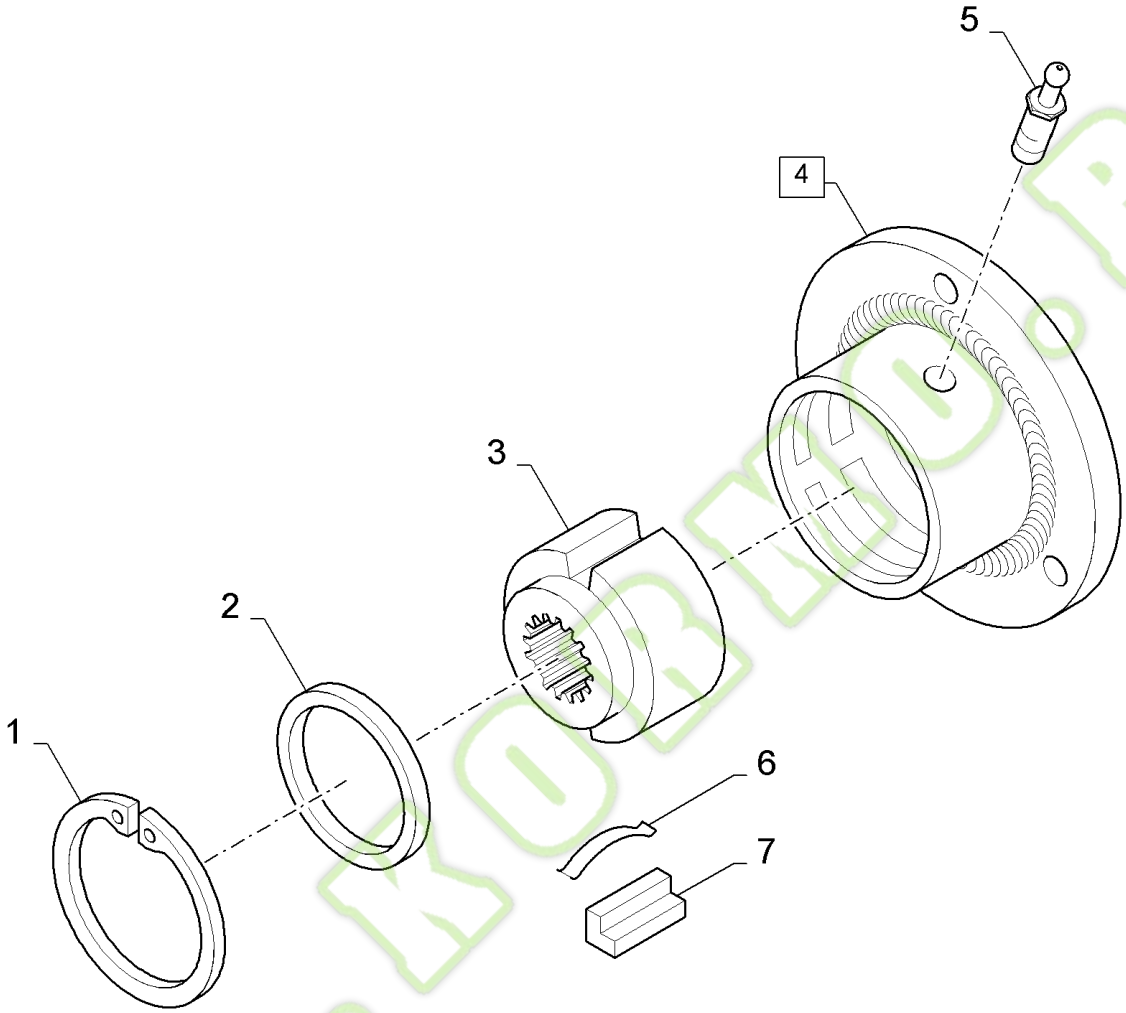

www.KOBMO.BY

FX50 SELF-PROPELLED FORAGE HARVESTER (10/02-)

14.03(01) CLUTCH

Ref	Part Number	Qty	Description
	84011945	1	CLUTCH, (1 to 7)
1	370018	1	RING, SNAP, {PP:80370018}
2	84031293	1	WASHER,
3	84031294	1	HUB,
4	84031295	1	HOUSING, (5)
5	300919	1	NIPPLE, LUBE, {PP:80300919}
6	449317	2	SPRING, {PP:80449317}
7	449316	2	KEY, {PP:80449316}

www.KOBMO.BY

14.04(01) DRIVE

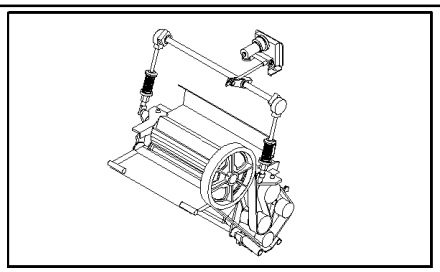

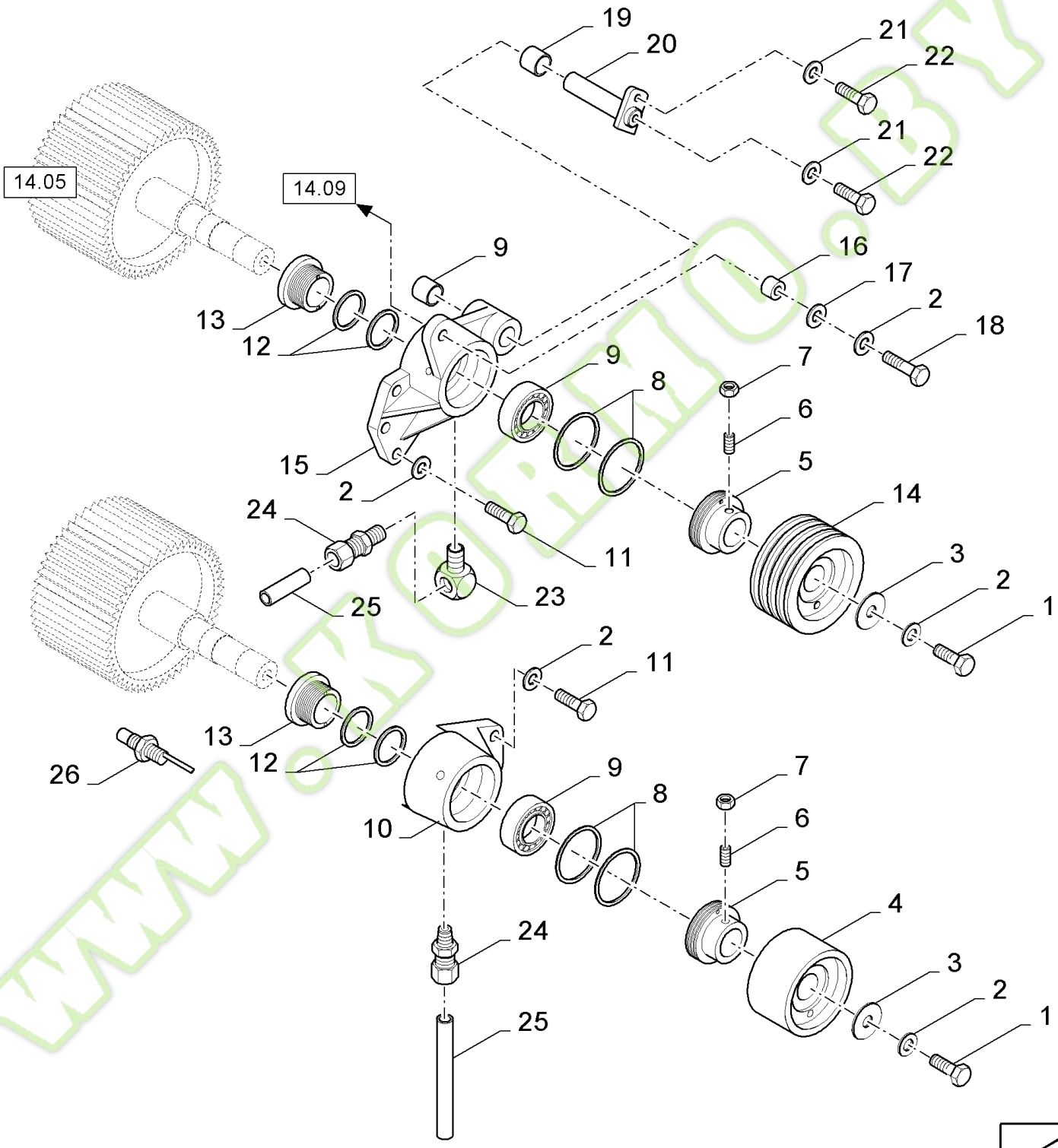

FX50 SELF-PROPELLED FORAGE HARVESTER (10/02-)

14.04(01) DRIVE

Ref	Part Number	Qty	Description
1	9706687	2	SCREW, {PP:89706687} Hex, M12 x 30, 8.8, M12x30
2	140046	10	WASHER, LOCK, {PP:80140046} Belleville, M12, 12MM
2	140048	5	WASHER, LOCK, {PP:80140048} Belleville, M16, 16MM
3	9801096	2	WASHER, {PP:89801096}
4	84814181	1	PULLEY,
5	84000852	2	FLANGE, , BSN C305
5	84449346	2	FLANGE, , ASN D306
6	300477	2	SCREW, {PP:80300477} Hex Soc, M8 x 16, Cup Pt, M8x16
7	89706690	2	NUT, CL 8, M8 x 1.25 x 13.0
8	89850345	2	SET OF RINGS,
9	323327	2	BEARING ASSY, {PP:80323327}
10	84400460	1	HOUSING, BEARING,
11	80337563	6	SCREW, M12x40
11	43168	5	SCREW, {PP:80043168} Hex, M16 x 40, 8.8, Hex, M16 x 40, 8.8
12	89850344	2	SET OF RINGS,
13	84000853	2	FLANGE,
14	84814180	1	PULLEY,
15	84400461	1	HOUSING, BEARING,
16	84000851	2	BUSHING,
17	378245	2	WASHER, {PP:80378245} 12MM
18	300389	2	SCREW, {PP:80300389} Hex, M12 x 35, 8.8, Full Thd, M12x35
19	84019797	4	BUSHING,
20	84058961	2	PIN,
21	140045	3	WASHER, LOCK, {PP:80140045} Belleville, M10, 10MM
22	120109	3	SCREW, {PP:80120109} Hex, M10 x 20, 8.8, Full Thd, M10x20
23	84053211	1	CONNECTOR, HYD.,
24	84037349	2	CONNECTOR, HYD.,
25	84039176	AR	TUBE, RIGID, L=3M
26	84056994	1	SENSOR, , BSN C357
26	84056993	1	SENSOR, , ASN D358

www.SOBMO.BY

14.05(01) CROP PROCESSOR, ROLLS, 77 AND 99 SERRATIONS - C357

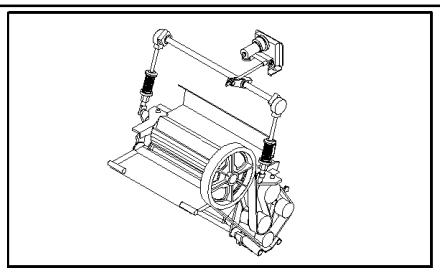

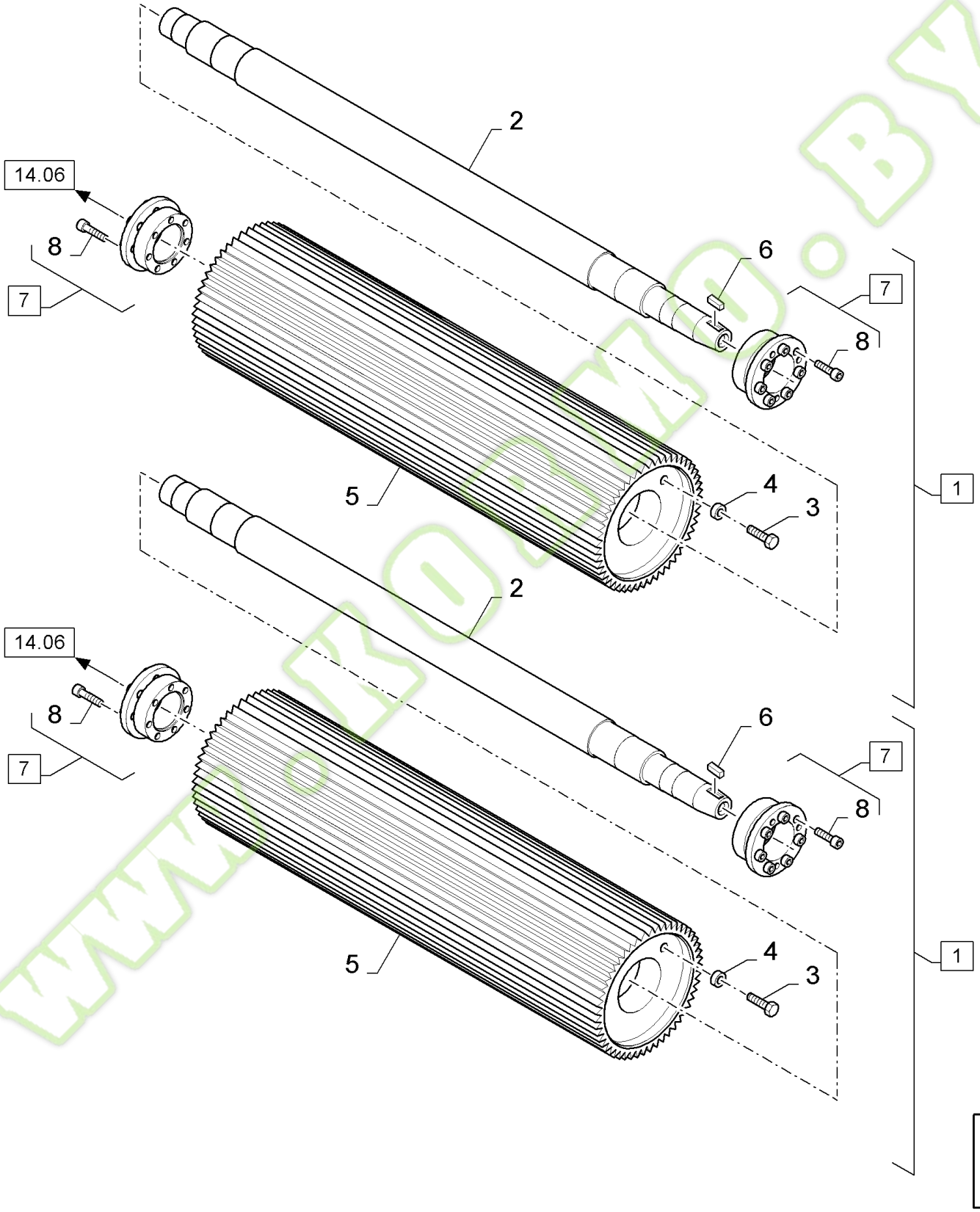

www.kombo.by

FX50 SELF-PROPELLED FORAGE HARVESTER (10/02-)

14.05(01) CROP PROCESSOR, ROLLS, 77 AND 99 SERRATIONS - C357

Ref	Part Number	Qty	Description
1	84073448	2	ROLLER, (2 to 8), 99 SERRATIONS, BSN C305
1	84449973	2	ROLLER, (2 to 8), 99 SERRATIONS, ASN D306
1	84078970	2	DIA KIT, HARVESTER, (2 to 8), 77 SERRATIONS, BSN C305
1	84449974	2	DIA KIT, HARVESTER, (2 to 8), 77 SERRATIONS, ASN D306
2	84074960	2	SHAFT, , BSN C305
2	84814388	2	SHAFT, , ASN D306
3	300388	6	SCREW, {PP:80300388} Hex, M12 x 25, 8.8, M12x25
4	84056580	6	BUSHING,
5	84074961	2	ROLLER, , 99 SERRATIONS
5	84073406	2	ROLLER, , 77 SERRATIONS
6	360956	4	KEY, {PP:80360956}
7	84814419	4	RING, (8), BSN C281
7	84818644	4	CLAMP, COLLAR, (8), ASN D282
8	9706749	AR	SCREW, {PP:89706749} Hex Soc Hd, M8 x 25, 12.9, M8x25, BSN C281
8	84432127	AR	SCREW, Hex Soc Hd, M6 x 25, 12.9, M8x25, ASN D282

www.KOBMO.BY

14.05A(01) CROP PROCESSOR, ROLLS, 132 SERRATIONS - C357

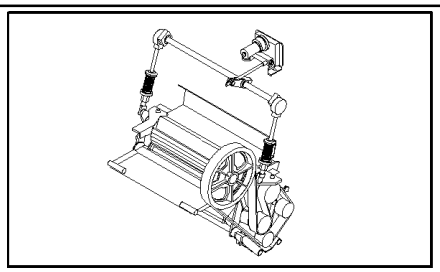

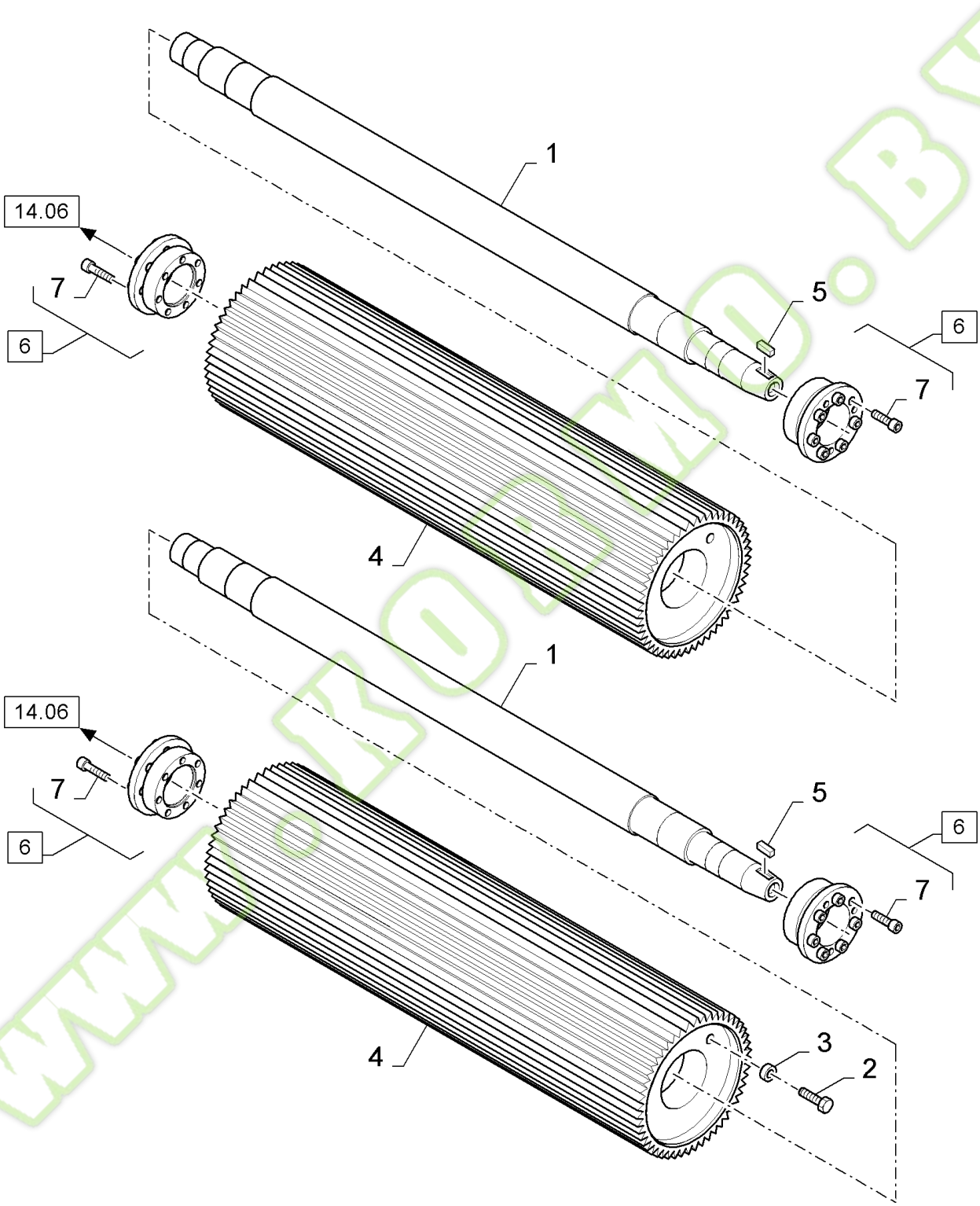

www.kombo.by

FX50 SELF-PROPELLED FORAGE HARVESTER (10/02-)

14.05A(01) CROP PROCESSOR, ROLLS, 132 SERRATIONS - C357

Ref	Part Number	Qty	Description
1	84074960	2	SHAFT, , BSN C305
1	84814388	2	SHAFT, , ASN D306
2	300388	3	SCREW, {PP:80300388} Hex, M12 x 25, 8.8, M12x25
3	84056580	3	BUSHING,
4	84441140	2	ROLLER, Sawtooth
5	360956	2	KEY, {PP:80360956}
6	84814419	4	RING, (7), BSN C281
6	84818644	4	CLAMP, COLLAR, (7), ASN D282
7	9706749	AR	SCREW, {PP:89706749} Hex Soc Hd, M8 x 25, 12.9, M8x25, BSN C281
7	84432127	AR	SCREW, Hex Soc Hd, M6 x 25, 12.9, M8x25, ASN D282

www.KOBMO.BY

14.05B(01) CROP PROCESSOR, ROLLS, 77/99/132 SERRATIONS - D358

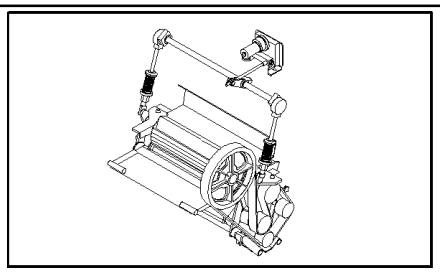

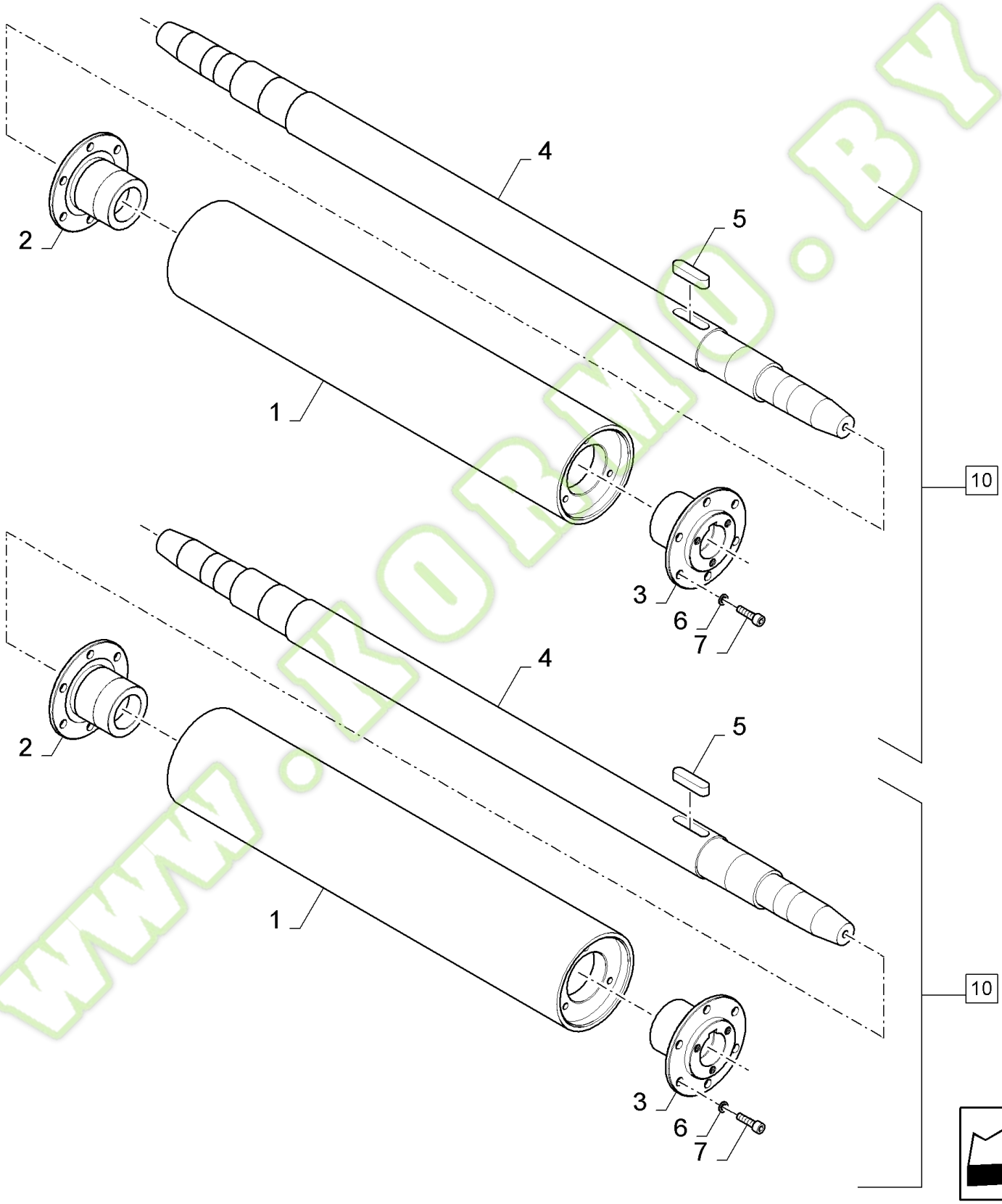

www.KOBMO.BY

FX50 SELF-PROPELLED FORAGE HARVESTER (10/02-)

14.05B(01) CROP PROCESSOR, ROLLS, 77/99/132 SERRATIONS - D358

Ref	Part Number	Qty	Description
1	84073406	2	ROLLER, , 77 SERRATIONS
1	84074961	2	ROLLER, , 99 SERRATIONS
1	84441140	2	ROLLER, Sawtooth, 132 SERRATIONS
2	84455018	2	FLANGE,
3	84455019	2	FLANGE,
4	84455001	2	SHAFT,
5	84455017	2	KEY,
6	362298	24	WASHER, {PP:80362298} 12MM
7	300388	24	SCREW, {PP:80300388} Hex, M12 x 25, 8.8, M12x25
10	84457955	2	ROLLER, , 77 SERRATIONS
10	84455049	2	ROLLER, , 99 SERRATIONS
10	84457956	2	ROLLER, (1 to 7), 132 SERRATIONS

www.KOBMO.BY

14.06(01) DRIVE, RH

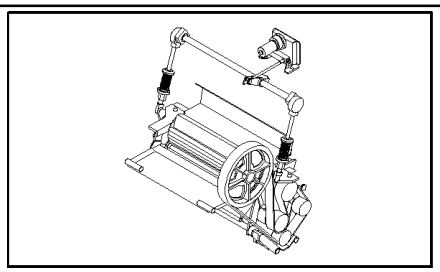

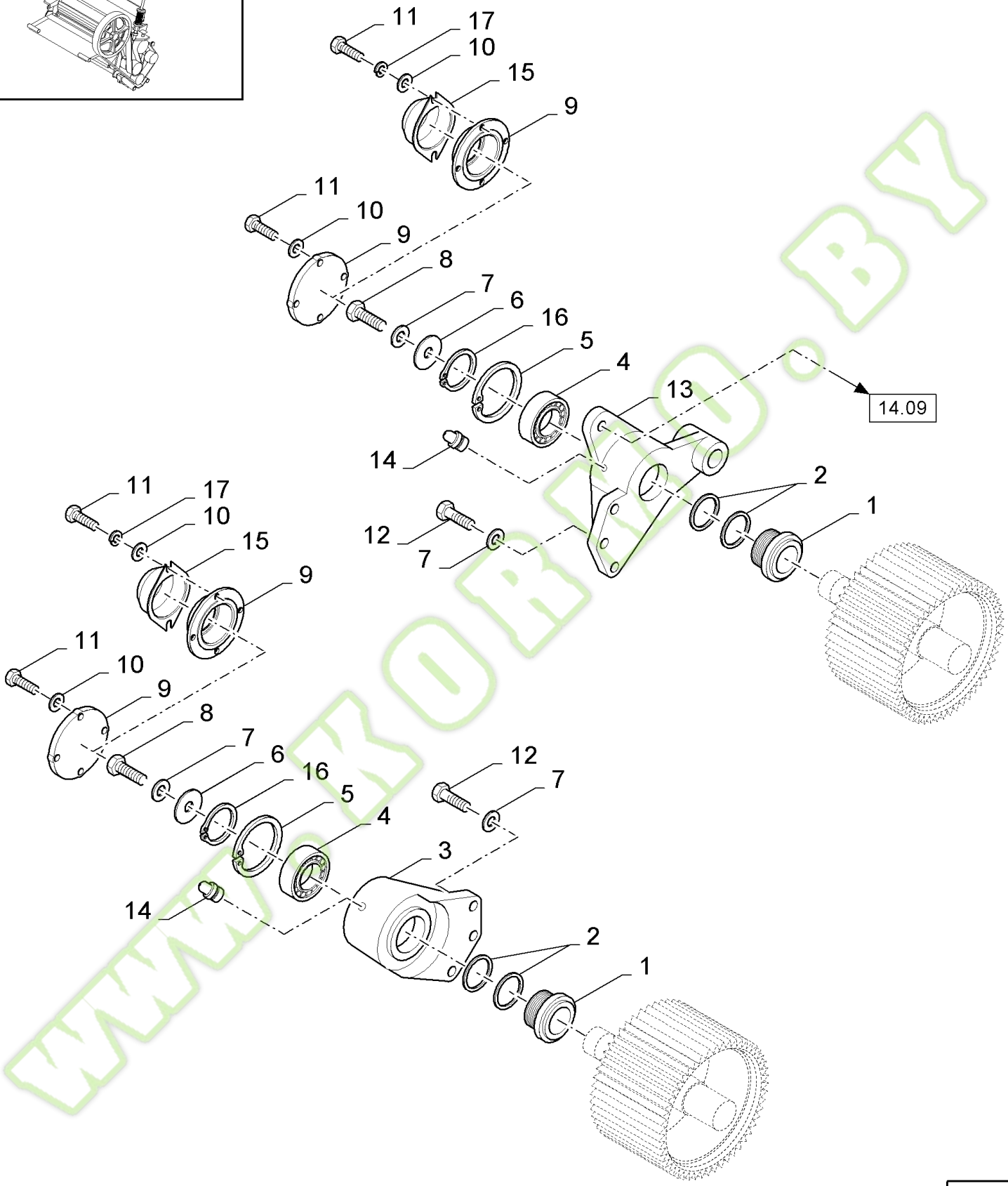

WWW.KOBRO.BY

FX50 SELF-PROPELLED FORAGE HARVESTER (10/02-)

14.06(01) DRIVE, RH

Ref	Part Number	Qty	Description
1	84000853	2	FLANGE,
2	89850344	2	SET OF RINGS,
3	84056354	1	HOUSING, BEARING, , BSN C291
3	84819605	1	HOUSING, BEARING, , ASN D292
4	323327	2	BEARING ASSY, {PP:80323327}
5	80300633	2	RING, SNAP,
6	9801096	2	WASHER, {PP:89801096}
7	140046	8	WASHER, LOCK, {PP:80140046} Belleville, M12, 12MM
8	9706687	2	SCREW, {PP:89706687} Hex, M12 x 30, 8.8, M12x30
9	84018071	2	COVER, , BSN C305
9	84819666	2	COVER, , ASN D306
10	322357	8	WASHER, LOCK, {PP:80322357} Belleville, M6, Belleville, M6
11	80120099	8	SCREW, Hex, M6 x 16, 8.8, M6x16
12	80337563	6	SCREW, M12x40
13	84056360	1	HOUSING, BEARING, , BSN C291
13	84819607	1	HOUSING, BEARING, , ASN D292
14	9838669	4	NIPPLE, LUBE, {PP:89838669}
15	84819754	2	PLATE, , ASN D306
16	440442	2	CIRCLIP, {PP:80440442} , ASN D306
17	140040	8	WASHER, {PP:80140040} M6 x 22 x 2, , ASN D306

www.KOBMO.BY

14.07(01) ROLL ADJUSTMENT

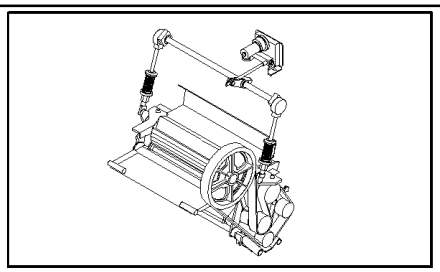

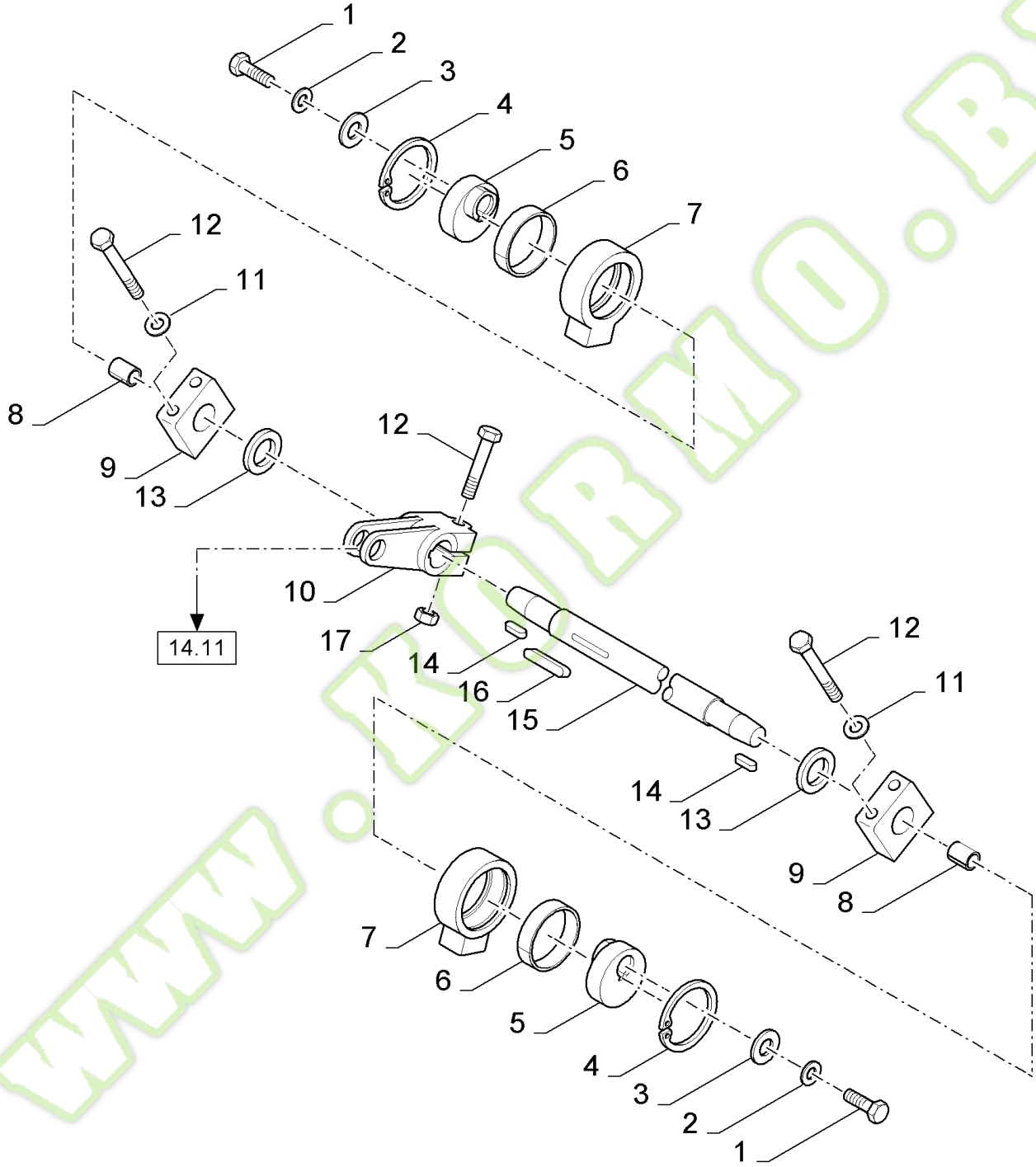

www.KOBMO.BY

FX50 SELF-PROPELLED FORAGE HARVESTER (10/02-)

14.07(01) ROLL ADJUSTMENT

Ref	Part Number	Qty	Description
1	120109	2	SCREW, {PP:80120109} Hex, M10 x 20, 8.8, Full Thd, M10x20
2	140045	2	WASHER, LOCK, {PP:80140045} Belleville, M10, 10MM
3	140042	2	WASHER, LOCK, {PP:80140042} M10 x 34 x 3, 10MM
4	80300633	2	RING, SNAP,
5	84011789	2	ECCENTRIC,
6	84036158	2	SLEEVE,
7	84011665	2	HOUSING, BEARING,
8	210022	2	SLEEVE, {PP:80210022}
9	84036200	2	HOUSING, BEARING, (8)
10	84036404	1	LEVER,
11	140046	4	WASHER, LOCK, {PP:80140046} Belleville, M12, 12MM
12	120084	5	SCREW, {PP:80120084} Hex, M12 x 80, 8.8, M12x80
13	743469	2	WASHER, {PP:80743469}
14	170005	2	KEY, {PP:80170005}
15	84011790	1	SHAFT,
16	170012	1	KEY, {PP:80170012}
17	337475	1	NUT, {PP:80337475} M12, Cl 10, M12

www.KOBMO.BY

14.08(01) ROLL ADJUSTMENT

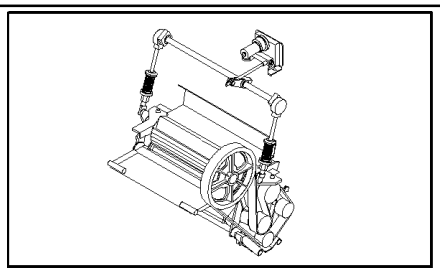

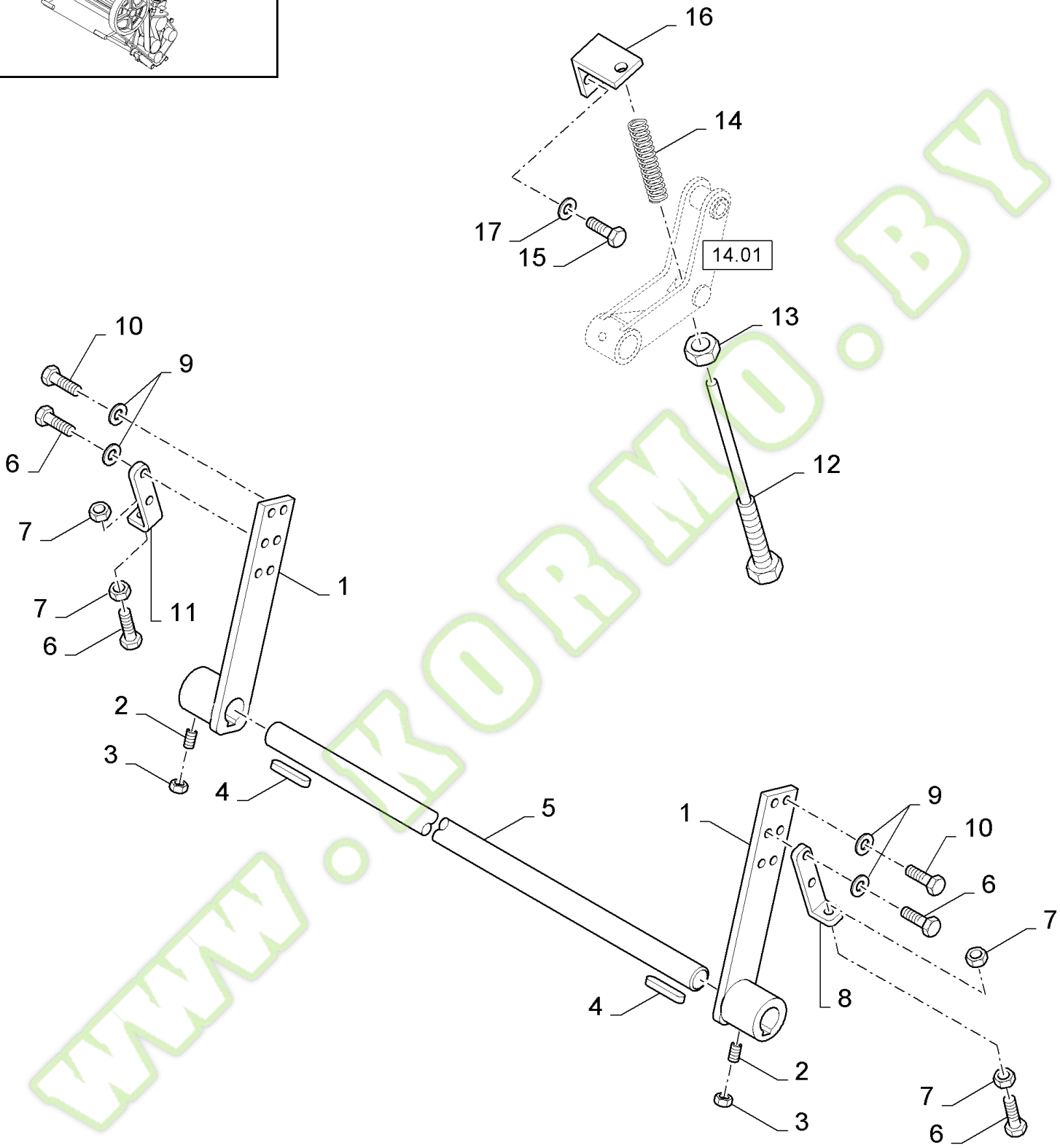

www.KOBMO.BY

FX50 SELF-PROPELLED FORAGE HARVESTER (10/02-)

14.08(01) ROLL ADJUSTMENT

Ref	Part Number	Qty	Description
1	84000848	2	SUPPORT,
2	300478	2	SCREW, {PP:80300478} Hex Soc, M8 x 20, Cup Pt, M8x20
3	89706690	2	NUT, CL 8, M8 x 1.25 x 13.0
4	323190	2	KEY, {PP:80323190}
5	84000850	1	SHAFT,
6	80337563	6	SCREW, M12x40
7	337475	4	NUT, {PP:80337475} M12, Cl 10, M12
8	84017962	1	BRACKET,
9	140046	6	WASHER, LOCK, {PP:80140046} Belleville, M12, 12MM
10	300389	2	SCREW, {PP:80300389} Hex, M12 x 35, 8.8, Full Thd, M12x35
11	84017961	1	BRACKET,
12	84000921	1	ROD, THREADED,
13	100033	1	NUT, {PP:80100033} Thin, M24 x 1.5, Cl 04, M24
14	84078522	1	SPRING, , BSN C269
14	84818112		SPRING, , ASN D270
15	120069	2	SCREW, {PP:80120069} Hex, M10 x 50, 8.8, M10x50,LH
15	325829	2	SCREW, {PP:80325829} Hex, M10 x 45, 8.8, M10x45,RH
16	84056393	1	BRACKET,
17	140045	2	WASHER, LOCK, {PP:80140045} Belleville, M10, 10MM

www.KOBMO.BY

14.09(01) ROLL ADJUSTMENT

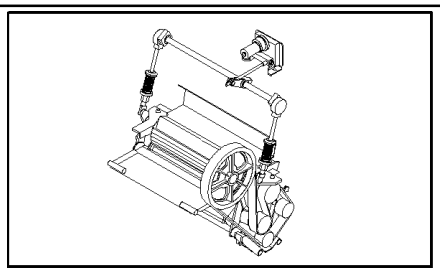

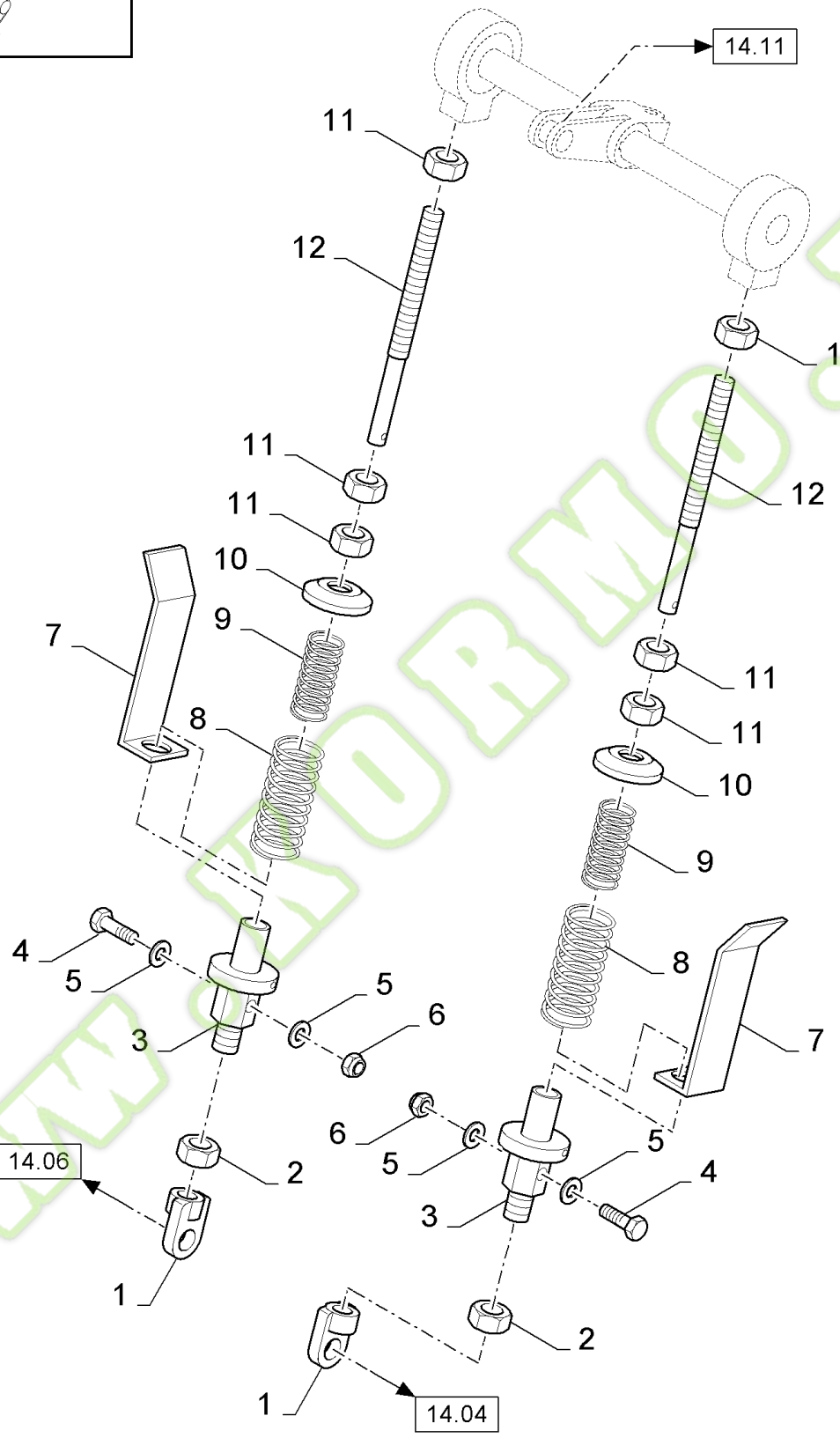

www.KOBMO.BY

FX50 SELF-PROPELLED FORAGE HARVESTER (10/02-)

14.09(01) ROLL ADJUSTMENT

Ref	Part Number	Qty	Description
1	84000855	2	SUPPORT,
2	84011539	2	NUT, Thin, M20 x 1.5, Cl 05, LH, M20
3	84056349	2	SUPPORT,
4	412151	2	BOLT, {PP:80412151} Hex, M10 x 55, 8.8, M10x55
5	378244	4	WASHER, LOCK, {PP:80378244}
6	100016	2	NUT, {PP:80100016} M10, Cl 8, M10
7	84037178	2	INDICATOR,
8	9814760	2	SPRING, {PP:89814760}
9	9814761	2	SPRING, {PP:89814761}
10	89850009	2	RING,
11	320771	6	NUT, {PP:80320771} Thin, M20 x 1.5, Cl 04, M20
12	84012281	2	ROD, THREADED,

www.KOBMO.BY

14.10(01) ELECTRICAL CONTROL

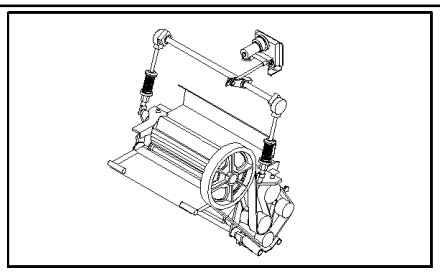

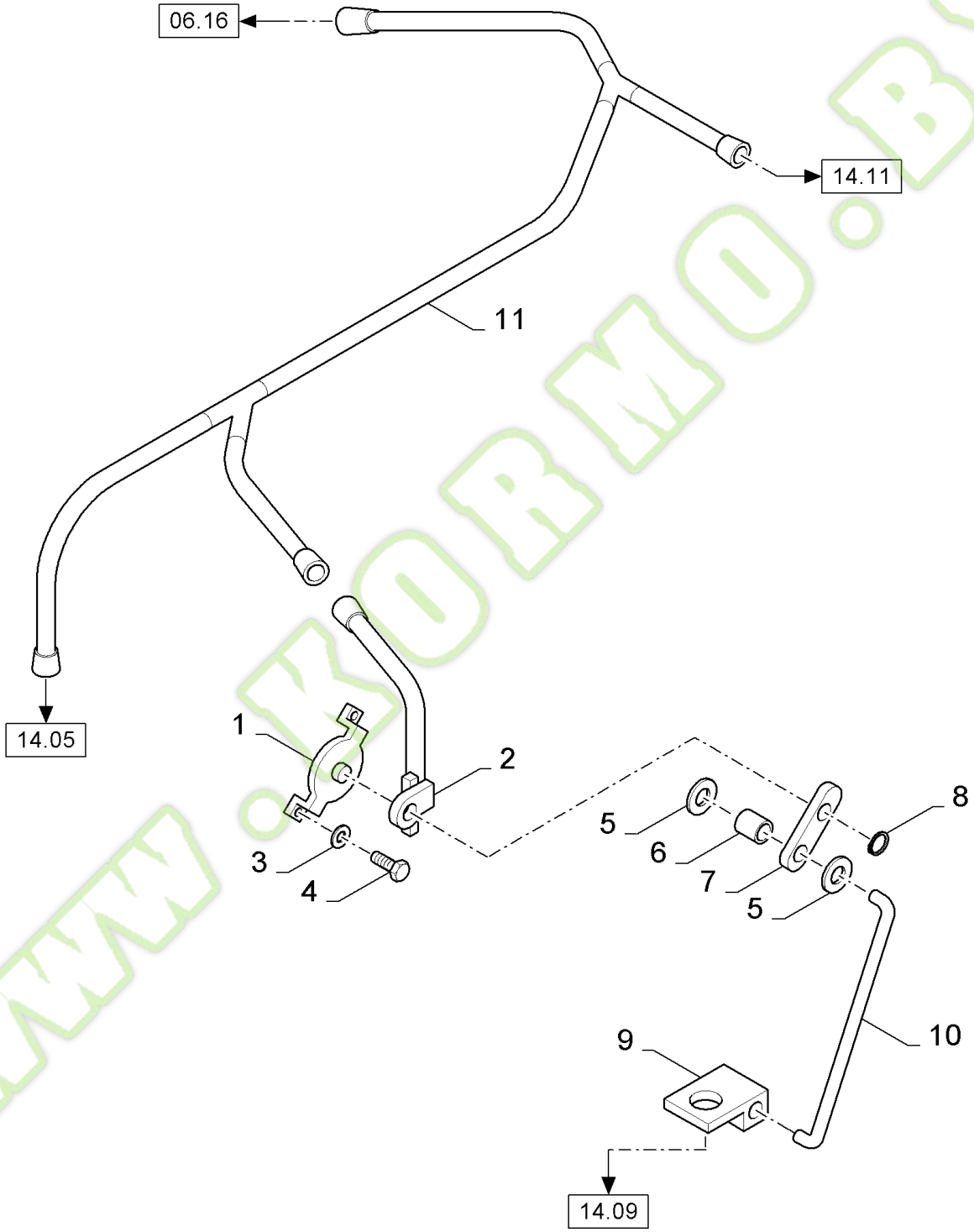

www.KOBMO.BY

FX50 SELF-PROPELLED FORAGE HARVESTER (10/02-)

14.10(01) ELECTRICAL CONTROL

Ref	Part Number	Qty	Description
1	E6NNT936AA	1	BRACKET, {PP:83981890}
2	9594791	1	SENSOR, {PP:89594791}
3	140045	2	WASHER, LOCK, {PP:80140045} Belleville, M10, 10MM
4	120109	2	SCREW, {PP:80120109} Hex, M10 x 20, 8.8, Full Thd, M10x20
5	398561	4	CLIP, {PP:80398561}
6	E6NNT934AA	1	BUSHING, {PP:83981915}
7	E6NNT933AA	1	LEVER, {PP:83981913}
8	N663107S36	1	CIRCLIP, {PP:83981963}
9	84011824	1	BRACKET,
10	84011825	1	ROD,
11	84035639	1	HARNESS, WIRE,

www.KOBMO.BY

14.11(01) ELECTRICAL CONTROL

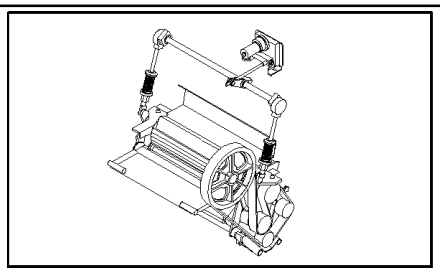

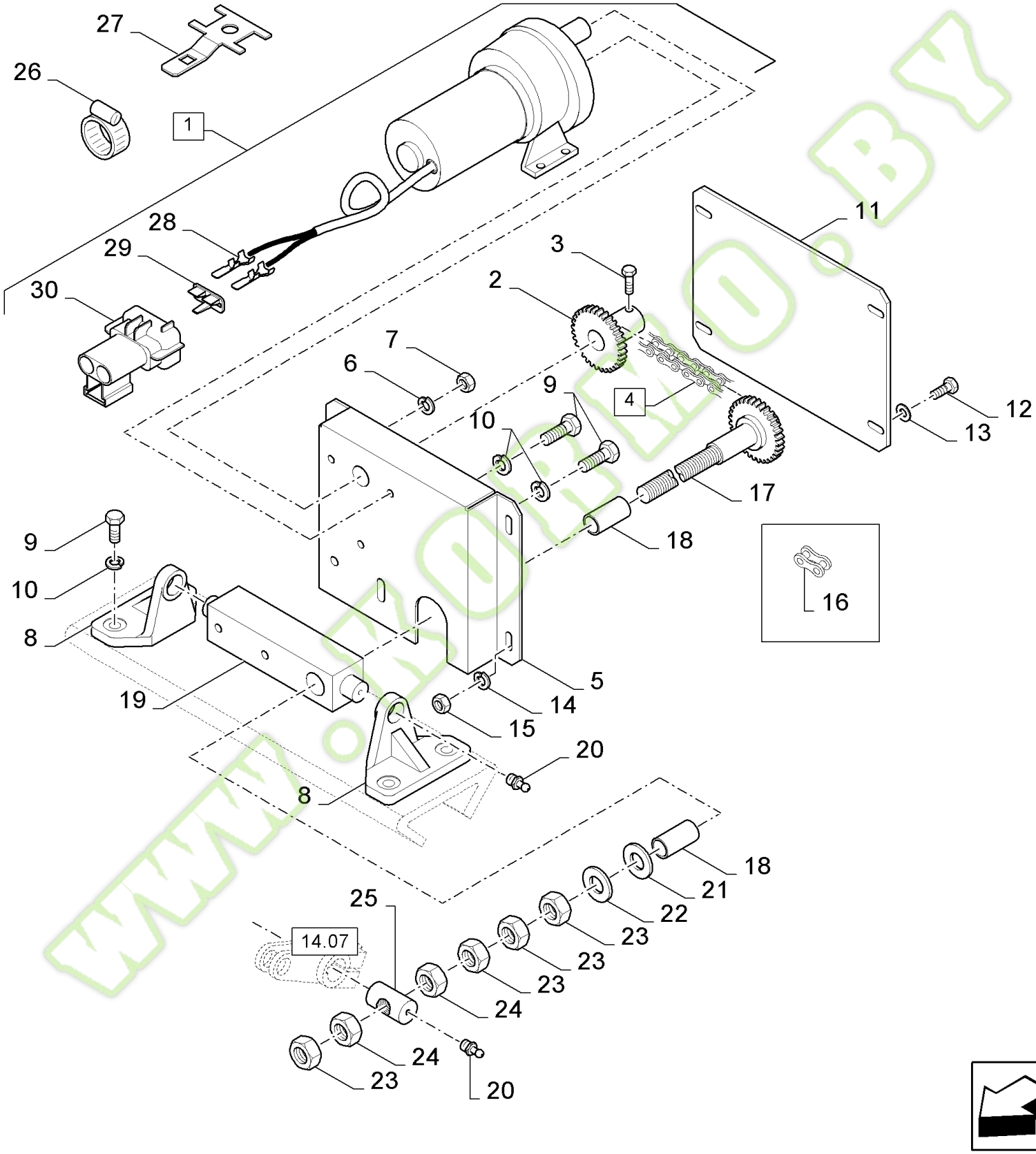

www.KOBMO.BY

FX50 SELF-PROPELLED FORAGE HARVESTER (10/02-)

14.11(01) ELECTRICAL CONTROL

Ref	Part Number	Qty	Description
1	84019727	1	MOTOR, ELECTRIC, SMALL, (28 to 30)
2	84017037	1	SPROCKET, DRIVEN,
3	84012755	1	SCREW, Hex Soc, M6 x 5, M6x6
4	84036397	1	CHAIN, (16)
5	84036403	1	SUPPORT,
6	322357	3	WASHER, LOCK, {PP:80322357} Belleville, M6, Belleville, M6
7	88542	3	SCREW, {PP:80088542} Hex, 1/4"-20 x 1/2", G5, Full Thd, .25"x50"
8	84036413	2	HOUSING, BEARING,
9	43139	4	SCREW, {PP:80043139} Hex, M10 x 25, 8.8, Full Thd, M10x25
10	140045	4	WASHER, LOCK, {PP:80140045} Belleville, M10,
11	84036401	1	PLATE,
13	378243	4	WASHER, {PP:80378243}
14	322358	4	WASHER, LOCK, {PP:80322358} Belleville, M8,
15	89706690	4	NUT, CL 8, M8 x 1.25 x 13.0
16	25195	1	LINK, CONNECTING, {PP:80025195}
17	84036437	1	ROD, THREADED,
18	382975	2	BUSHING, {PP:80382975}
19	84058650	1	SUPPORT,
20	321204	2	NIPPLE, LUBE, {PP:80321204}
21	168100	4	SHIM, {PP:80168100}
22	378247	1	WASHER, {PP:80378247}
23	320771	4	NUT, {PP:80320771} Thin, M20 x 1.5, Cl 04, M20x1.5
24	84036420	2	NUT, M20x1.5
25	84056346	1	PIN,
26	381145	1	CLAMP, {PP:80381145}
27	84032700	1	SUPPORT,
28	84018981	2	TERMINAL,
29	84018974	1	LOCK,
30	84018968	1	CONNECTOR,
12	16043224	4	SCREW, Hex, M8 x 16, 8.8, Full Thd, M8x16

www.KORMO.BY

14.12(01) FRAME AND GUARDS

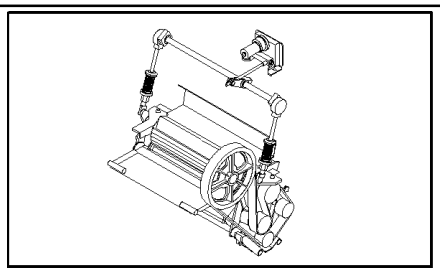

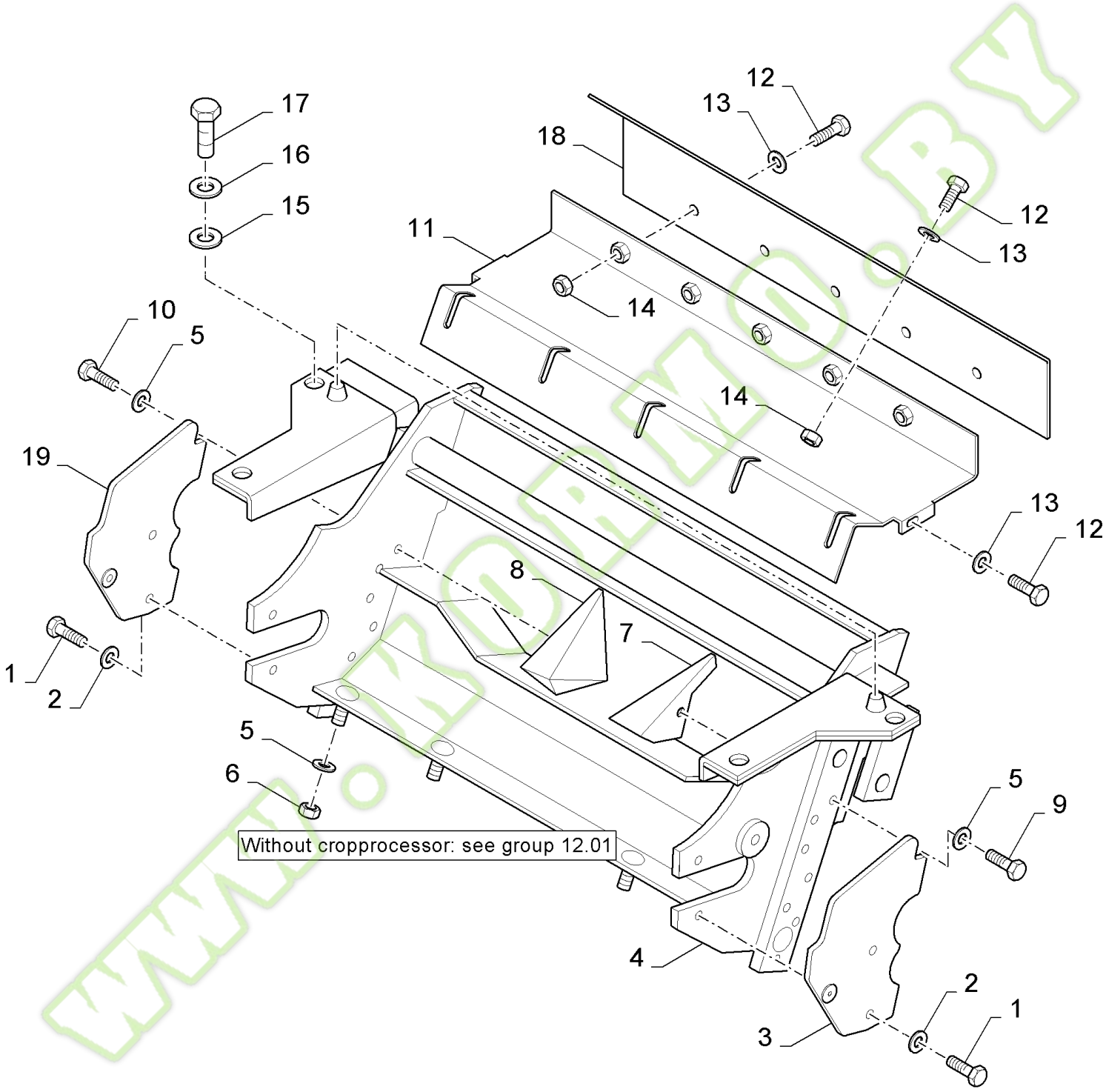

www.ROEMO.BY

FX50 SELF-PROPELLED FORAGE HARVESTER (10/02-)

14.12(01) FRAME AND GUARDS

Ref	Part Number	Qty	Description
1	80043151	4	SCREW, M12x20
2	140046	4	WASHER, LOCK, {PP:80140046} Belleville, M12, 12MM
3	84056338	1	PLATE, COVER, LH
4	84446061	1	FRAME,
5	140045	9	WASHER, LOCK, {PP:80140045} Belleville, M10, 10MM
6	100016	5	NUT, {PP:80100016} M10, Cl 8, M10
7	84001328	1	PLATE, SKID,
8	84001329	1	PLATE, SKID,
9	120069	2	SCREW, {PP:80120069} Hex, M10 x 50, 8.8, M10x50
10	325829	2	SCREW, {PP:80325829} Hex, M10 x 45, 8.8, M10x45
11	84026149	1	COVER,
12	80120104	12	SCREW, M8x20
13	322358	12	WASHER, LOCK, {PP:80322358} Belleville, M8,
14	89706690	10	NUT, CL 8, M8 x 1.25 x 13.0
15	378246	4	WASHER, {PP:80378246}
16	140048	4	WASHER, LOCK, {PP:80140048} Belleville, M16, 16MM
17	120089	4	BOLT, {PP:80120089} Hex, M16 x 40, 8.8, Hex, M16 x 40, 8.8
18	84026147	1	COVER,
19	84056337	1	PLATE, COVER, RH

WWW.KOBMO.BY

14.13(01) GUIDES

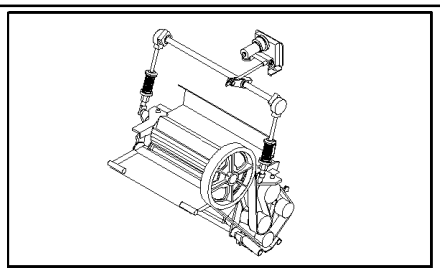

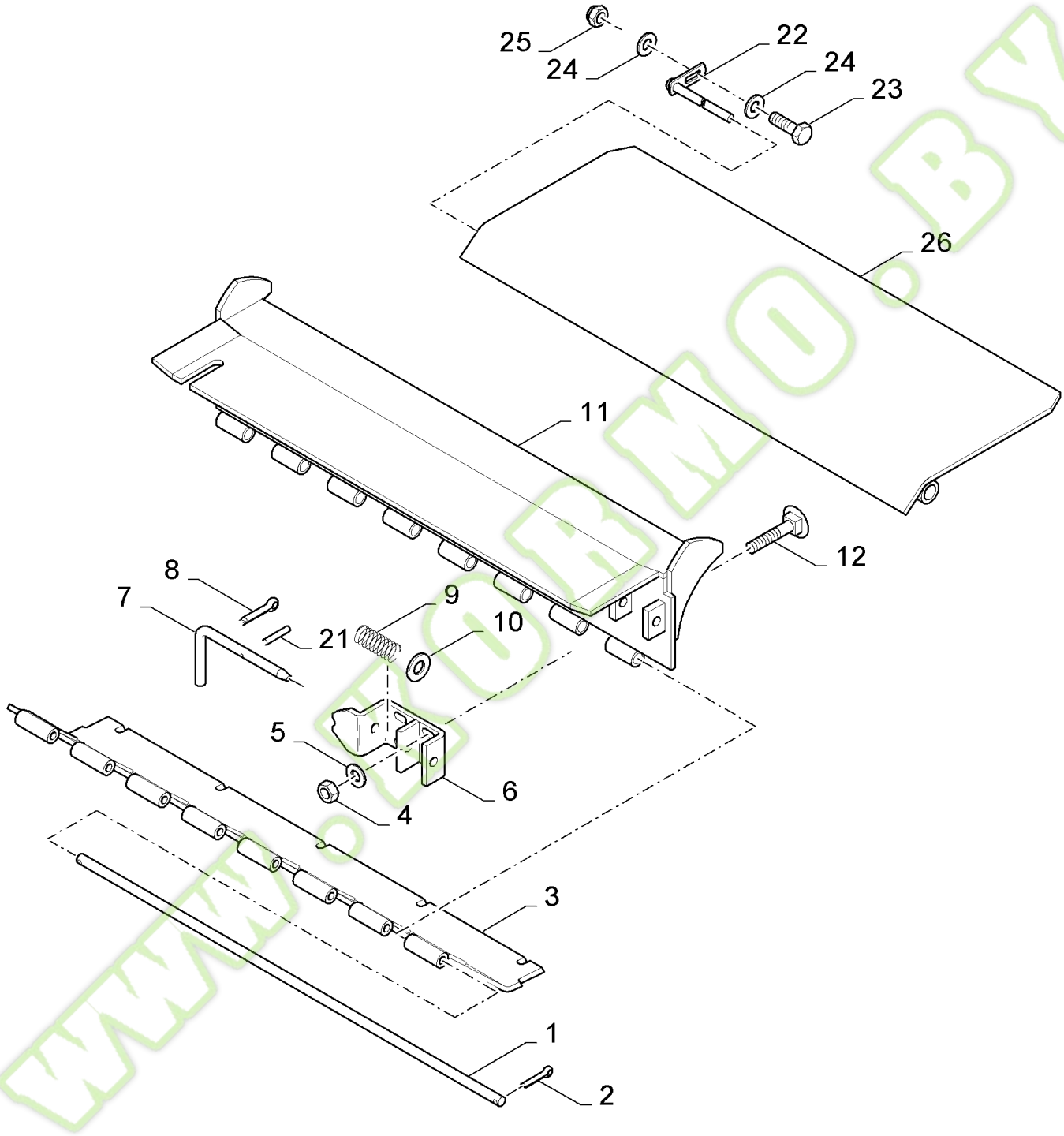

www.KOBMO.BY

14.13(01) GUIDES

Ref	Part Number	Qty	Description
1	84014996	1	ROD,
2	9512667	2	PIN, SPLIT (COTTER), {PP:89512667} M6.3 x 40,
3	84015016	1	COVER,
4	89706690	6	NUT, CL 8, M8 x 1.25 x 13.0
5	322358	6	WASHER, LOCK, {PP:80322358} Belleville, M8, 8MM
6	84017507	2	GUIDE,
7	84014616	2	HANDLE, CRANKED,
8	130004	2	PIN, SPLIT (COTTER), {PP:80130004} M3.2 x 25,
9	226829	2	SPRING, {PP:80226829}
10	140018	2	WASHER, {PP:80140018} M12 x 24 x 2.5, 12MM
11	84053116	1	PLATE,
12	120037	6	BOLT, {PP:80120037} Short NK, M8 x 20, Cl8.8, Full Thd, M8x20
21	370539	2	PIN, SPLIT (COTTER), {PP:80370539}
22	84045688	2	PIN,
23	9706687	2	SCREW, {PP:89706687} Hex, M12 x 30, 8.8, M12x30
24	140046	4	WASHER, LOCK, {PP:80140046} Belleville, M12, 12MM
25	337475	2	NUT, {PP:80337475} M12, Cl 10, M12
26	84446141	1	PLATE,

www.KOBMO.BY

14.14(01) GUARDS

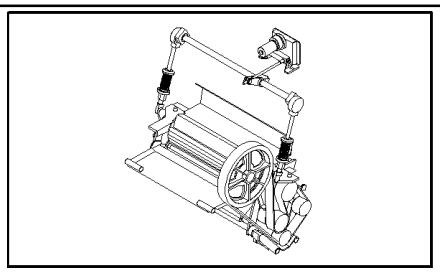

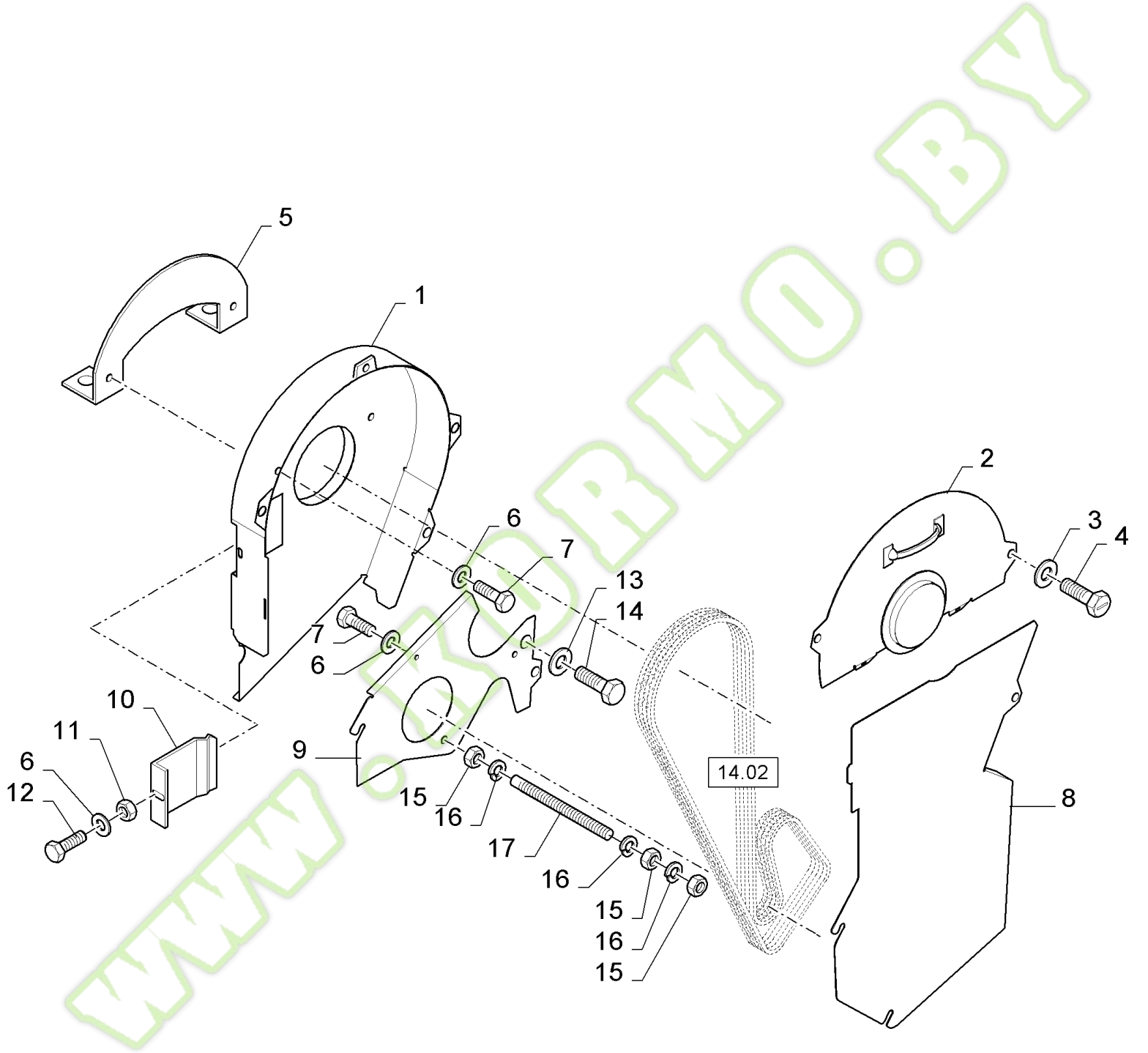

www.KOBMO.BY

FX50 SELF-PROPELLED FORAGE HARVESTER (10/02-)

14.14(01) GUARDS

Ref	Part Number	Qty	Description
1	84035876	1	PLATE,
2	84052063	1	SHIELD,
3	9514605	4	RING, LOCKING, {PP:89514605}
4	89514603	4	LOCK,
5	84052769	1	BRACKET,
6	322358	4	WASHER, LOCK, {PP:80322358} Belleville, M8, 8MM
7	80120104	3	SCREW, M8x20
8	84052011	1	PLATE, COVER,
9	84035944	1	PLATE,
10	84052375	1	COVER,
11	89706690	1	NUT, CL 8, M8 x 1.25 x 13.0
12	120037	1	BOLT, {PP:80120037} Short NK, M8 x 20, Cl8.8, Full Thd,
13	140045	1	WASHER, LOCK, {PP:80140045} Belleville, M10,
14	120109	1	SCREW, {PP:80120109} Hex, M10 x 20, 8.8, Full Thd,
15	100020	3	NUT, {PP:80100020} M16, Cl 8, M16, Cl 8
16	140048	3	WASHER, LOCK, {PP:80140048} Belleville, M16, 16MM
17	84068869	1	ROD, THREADED,

WWW.KOBMO.BY

14.21(01) RH CROP PROCESSOR DOUBLE DRIVE, SHIELDING AND BELT TENSION, ASSEMBLY

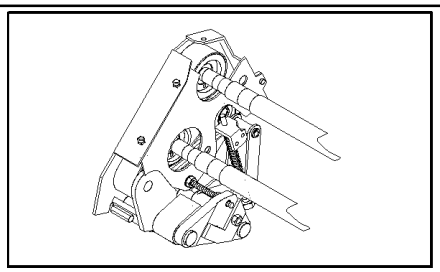

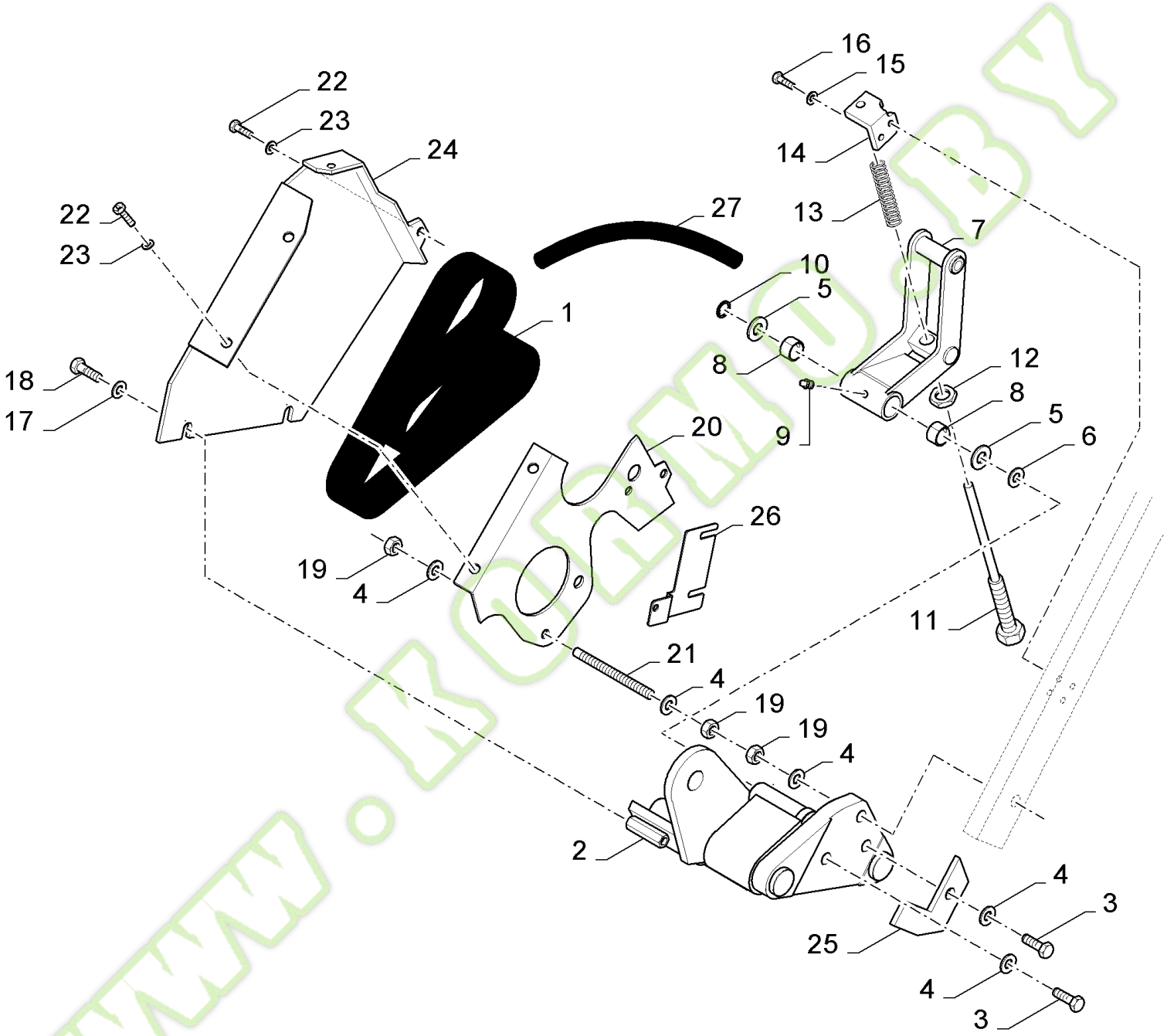

www.BOMBY

FX50 SELF-PROPELLED FORAGE HARVESTER (10/02-)

14.21(01) RH CROP PROCESSOR DOUBLE DRIVE, SHIELDING AND BELT TENSION, ASSEMBLY

Ref	Part Number	Qty	Description
1	84449048	1	BELT,
2	84819451	1	SUPPORT,
3	300389	2	SCREW, {PP:80300389} Hex, M12 x 35, 8.8, Full Thd, M12x35
4	140046	5	WASHER, LOCK, {PP:80140046} Belleville, M12, 12MM
5	9838356	AR	WASHER, {PP:89838356}
6	140108	AR	WASHER, {PP:80140108}
7	84819456	1	SUPPORT,
8	420434	2	BUSHING, {PP:80420434}
9	9838669	1	NIPPLE, LUBE, {PP:89838669}
10	370003	1	CIRCLIP, {PP:80370003}
11	84000921	1	ROD, THREADED,
12	100033	1	NUT, {PP:80100033} Thin, M24 x 1.5, Cl 04, M20
13	84818112	1	SPRING,
14	84819690	1	SUPPORT,
15	140045	2	WASHER, LOCK, {PP:80140045} Belleville, M10,
16	120069	2	SCREW, {PP:80120069} Hex, M10 x 50, 8.8, M10x50
17	140045	2	WASHER, LOCK, {PP:80140045} Belleville, M10, 10MM
18	43138	2	SCREW, {PP:80043138} Hex, M10 x 20, 8.8, Full Thd, M10x20
19	89706685	3	NUT, M12
20	84819558	1	PLATE,
21	80412024	1	ROD, THREADED, M12x140
22	89514603	3	LOCK,
23	9514605	3	RING, LOCKING, {PP:89514605}
24	84819560	1	PLATE,
25	84819448	1	PLATE,
26	84455090	1	PLATE, , ASN D326
27	84400089	1	HOSE, , ASN D326

www.KOBMO.BY

14.22(01) RH CROP PROCESSOR DOUBLE DRIVE, PULLEY'S AND AXLES

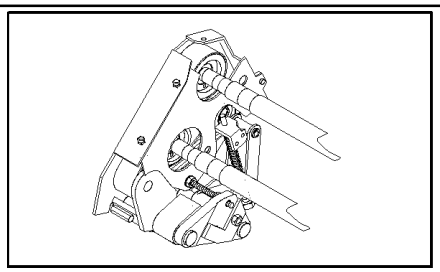

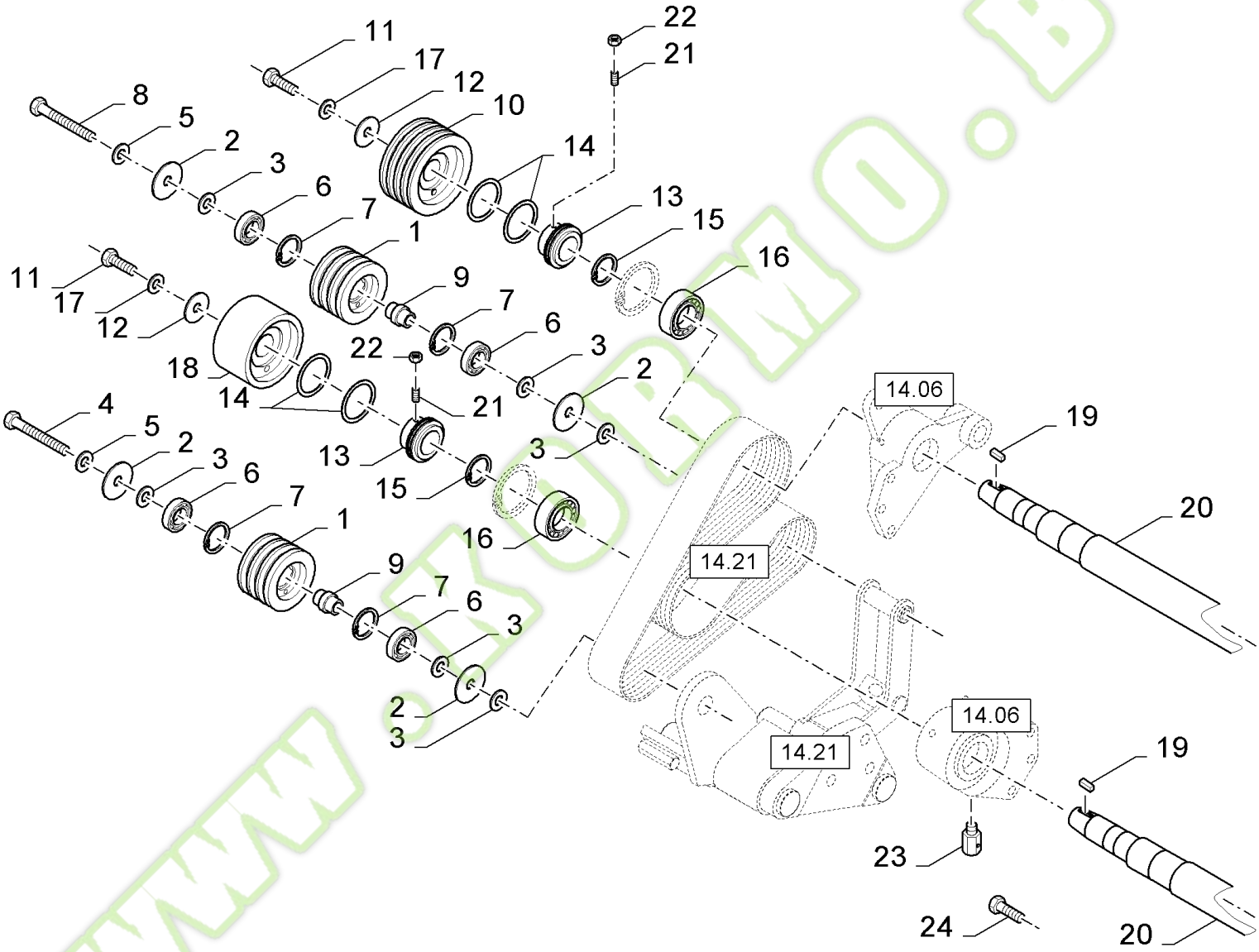

www.KUBMO.BY

FX50 SELF-PROPELLED FORAGE HARVESTER (10/02-)

14.22(01) RH CROP PROCESSOR DOUBLE DRIVE, PULLEY'S AND AXLES

Ref	Part Number	Qty	Description
1	84000844	2	PULLEY,
2	84017220	4	WASHER,
3	378246	6	WASHER, {PP:80378246} 16MM
4	120093	1	SCREW, {PP:80120093} Hex, M16 x 80, 8.8, Hex, M16 x 80, 8.8
5	140048	2	WASHER, LOCK, {PP:80140048} Belleville, M16, 16MM
6	443898	4	BEARING ASSY, {PP:80443898}
7	370011	4	CIRCLIP, {PP:80370011}
8	350616	1	SCREW, {PP:80350616} Hex, M16 x 90, 8.8, M16x90
9	84017221	2	BUSHING,
10	84814180	1	PULLEY,
11	9706687	2	SCREW, {PP:89706687} Hex, M12 x 30, 8.8, M12x30
12	9801096	2	WASHER, {PP:89801096}
13	84449346	2	FLANGE,
14	89850345	4	SET OF RINGS, DIA=80MM
15	440442	2	CIRCLIP, {PP:80440442}
16	323327	4	BEARING ASSY, {PP:80323327}
17	140046	2	WASHER, LOCK, {PP:80140046} Belleville, M12, 12MM
18	84814181	1	PULLEY,
19	360956	2	KEY, {PP:80360956}
20	84814388	2	SHAFT, , BSN C357
20	84455001	2	SHAFT, , ASN D358
21	300477	2	SCREW, {PP:80300477} Hex Soc, M8 x 16, Cup Pt, M8x16, ASN D326
22	89706690	2	NUT, M8, ASN D326
23	84053211	1	CONNECTOR, HYD., , ASN D326
24	9706748	10	CLAMP, {PP:89706748} M8x25, ASN D326

www.KORMO.BY

14.51(01) CROP PRO PLUS TM , HYDRO-DRIVE

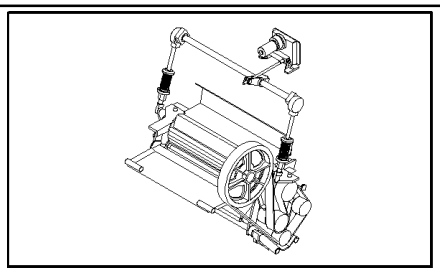

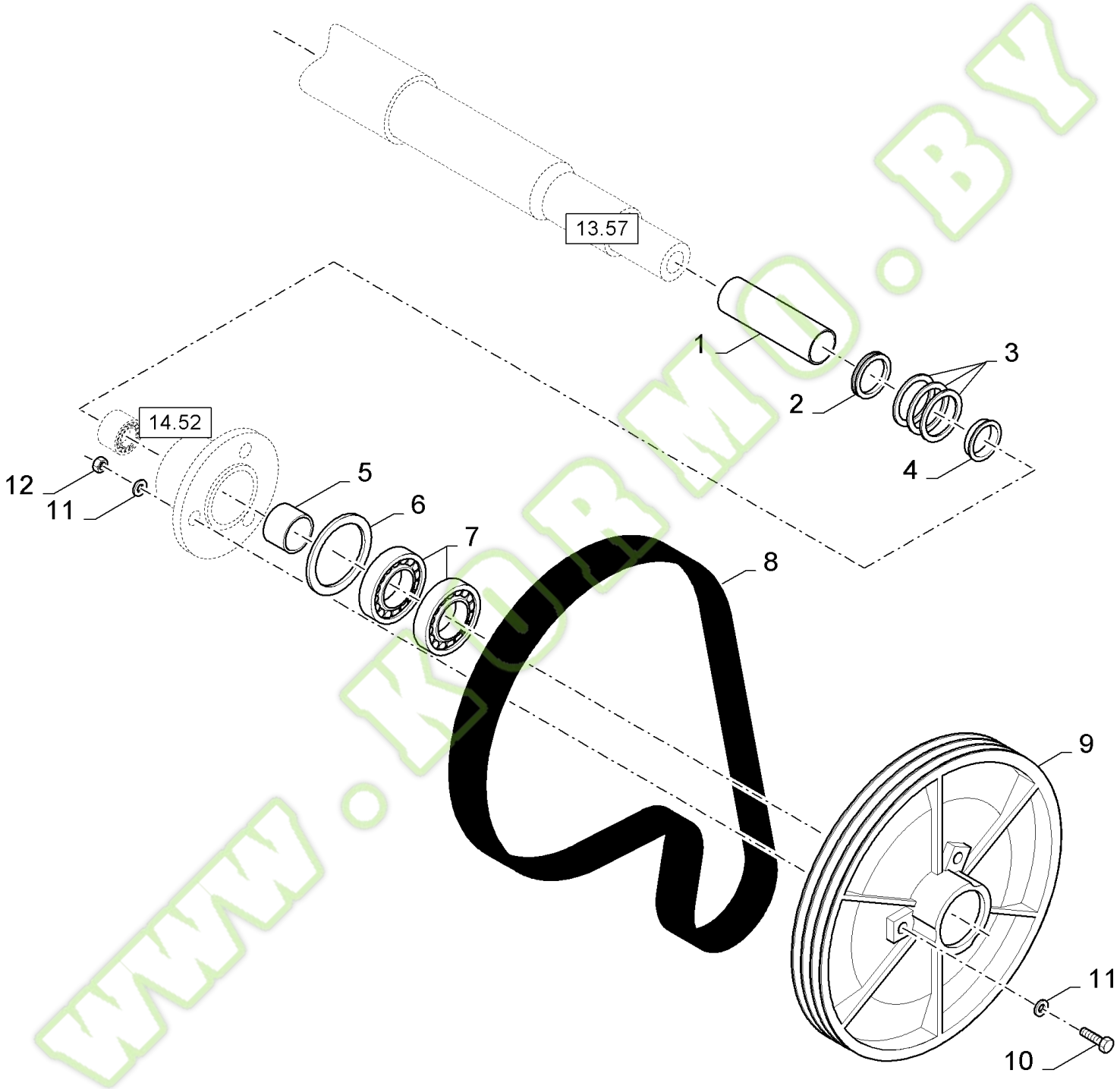

www.KOBMO.BY

FX50 SELF-PROPELLED FORAGE HARVESTER (10/02-)

14.51(01) CROP PRO PLUS TM , HYDRO-DRIVE

Ref	Part Number	Qty	Description
1	84068398	1	BUSHING, , BSN C269
1	84446250	1	BUSHING, , ASN D270
2	84068419	1	RING,
3	84068394	AR	SHIM,
4	84077930	1	RING,
5	84015773	1	SPACER,
6	370018	1	RING, SNAP, {PP:80370018}
7	84438926	2	BEARING, BALL,
8	84054417	1	BELT, TRANSMISSION, , FOR 3HA BELT, BSN C322
8	84448759	1	BELT, , FOR 6HA BELT, ASN D323
9	84334890	1	PULLEY, , FOR 3HA BELT, BSN C322
9	84448438	1	PULLEY, , FOR 6HA BELT, ASN D323
10	100016	3	NUT, {PP:80100016} M10, Cl 8, M10
11	140045	6	WASHER, LOCK, {PP:80140045} Belleville, M10, 10MM
12	120068	3	SCREW, {PP:80120068} Hex, M10 x 40, 8.8, Full Thd, M10x40

www.KOBMO.BY

14.52(01) CROP PRO PLUS TM, HYDRO-DRIVE, CLUTCH

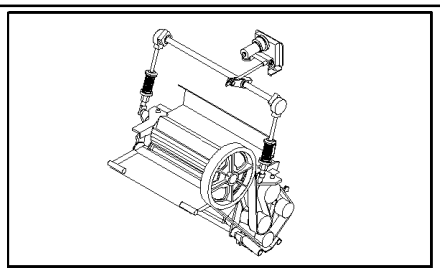

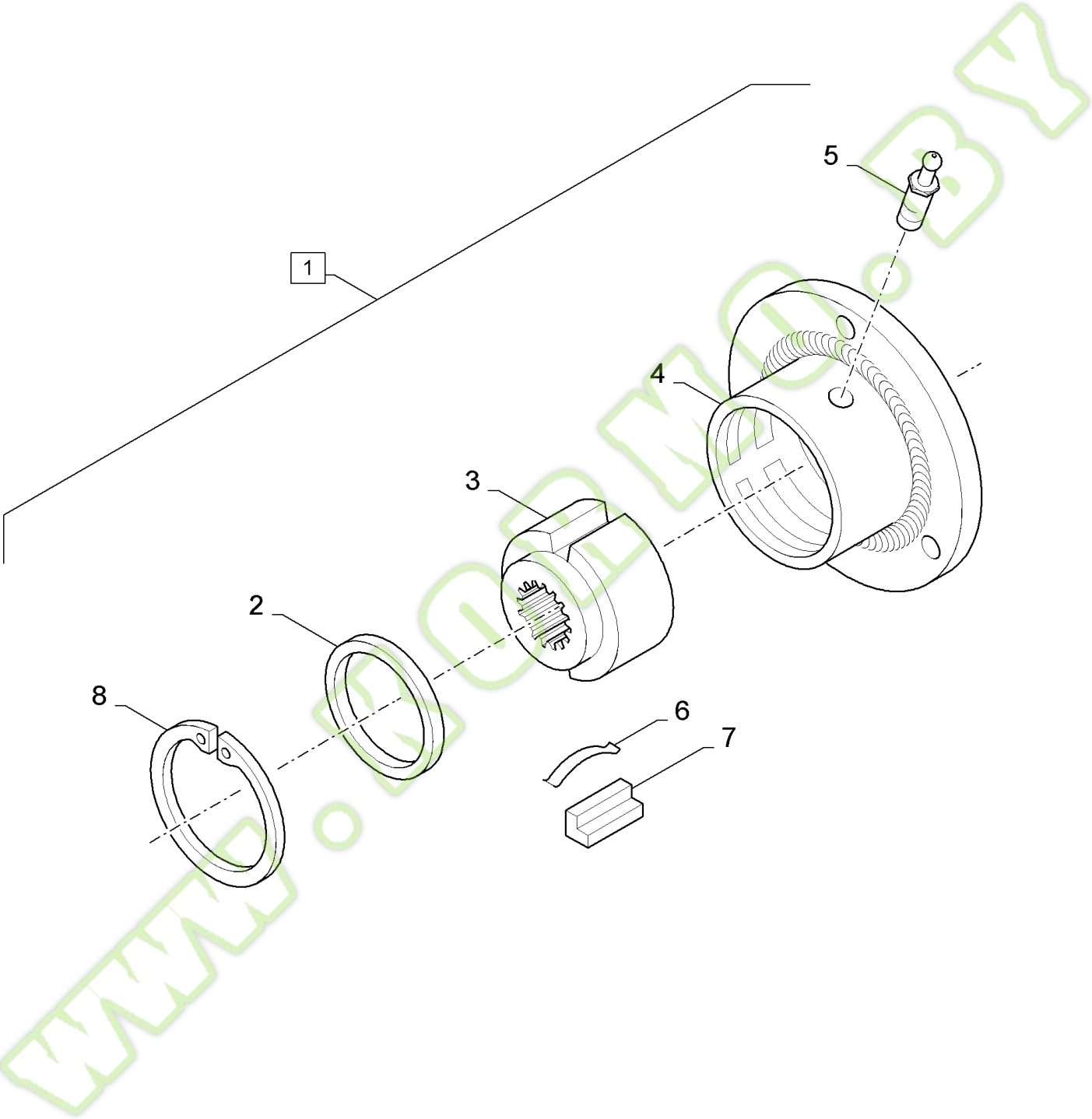

www.DOMO.BY

FX50 SELF-PROPELLED FORAGE HARVESTER (10/02-)

14.52(01) CROP PRO PLUS TM, HYDRO-DRIVE, CLUTCH

Ref	Part Number	Qty	Description
1	84011945	1	CLUTCH, (2 to 8)
2	84031293	1	WASHER,
3	84031294	1	HUB,
4	84031295	1	HOUSING, (5)
5	300919	1	NIPPLE, LUBE, {PP:80300919}
6	449317	2	SPRING, {PP:80449317}
7	449316	2	KEY, {PP:80449316}
8	370018	1	RING, SNAP, {PP:80370018}

www.KOBMO.BY

14.53(01) CROP PRO PLUS TM, HYDRO-DRIVE, ROLLS - LH

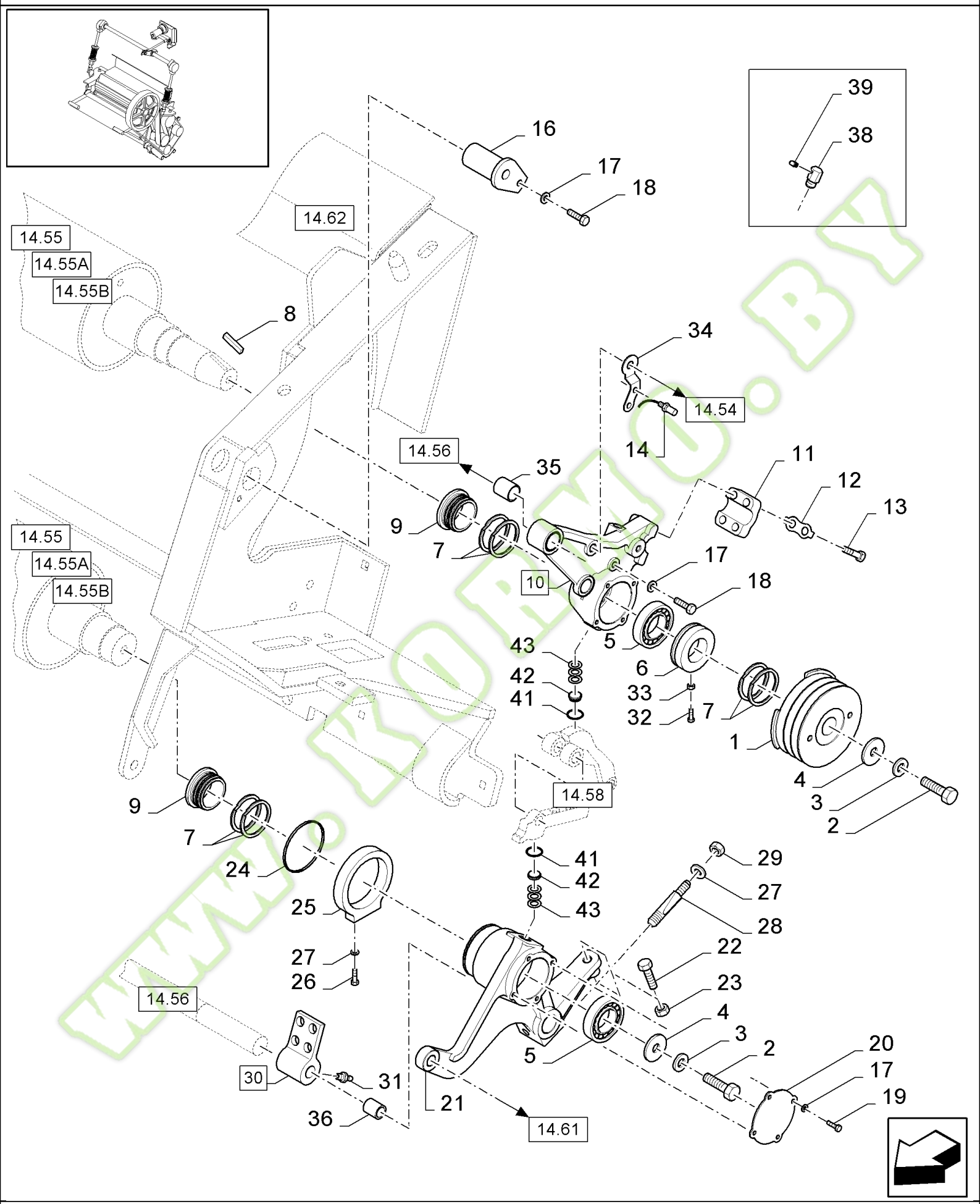

FX50 SELF-PROPELLED FORAGE HARVESTER (10/02-)

14.53(01) CROP PRO PLUS TM, HYDRO-DRIVE, ROLLS - LH

Ref	Part Number	Qty	Description
1	84334898	1	PULLEY, , FOR 3HA BELT, BSN C322
1	84448440	1	PULLEY, DRIVEN, , FOR 6HA BELT, ASN D323
2	9706687	2	SCREW, {PP:89706687} Hex, M12 x 30, 8.8, M12x30
3	140046	2	WASHER, LOCK, {PP:80140046} Belleville, M12, 12MM
4	9801096	2	WASHER, {PP:89801096}
5	323327	2	BEARING ASSY, {PP:80323327}
6	84077521	1	RING,
7	89850344	3	SET OF RINGS,
8	360956	1	KEY, {PP:80360956}
9	84000853	2	FLANGE,
10	84435643	1	HOUSING, BEARING, (35), FOR 3HA BELT, BSN C322
10	84449396	1	HOUSING, BEARING, (35), FOR 6HA BELT, ASN D323
11	84077738	1	CLAMP,
12	84431904	2	PLATE, LOCKING,
13	120068	4	SCREW, {PP:80120068} Hex, M10 x 40, 8.8, Full Thd, M10x40
14	84056907	1	SENSOR,
15	84432431	1	CAM,
16	84075366	1	PIN,
17	322358	9	WASHER, LOCK, {PP:80322358} Belleville, M8, 8MM
18	80120104	5	SCREW, M8x20
19	120103	4	SCREW, {PP:80120103} Hex, M8 x 16, 8.8, M8x16
20	84432724	1	COVER,
21	84334814	1	HOUSING, BEARING,
22	394674	2	BOLT, {PP:80394674} Hex, M16 x 80, 8.8, Full Thd, Hex, M16 x 80, 8.8, Full Thd
23	100020	1	NUT, {PP:80100020} M16, Cl 8, M16, Cl 8
24	370010	1	CIRCLIP, {PP:80370010}
25	84075050	1	BUSHING,
26	43139	2	SCREW, {PP:80043139} Hex, M10 x 25, 8.8, Full Thd, M10x25
27	140045	3	WASHER, LOCK, {PP:80140045} Belleville, M10, 10MM
28	84989980	1	STUD,
29	100016	1	NUT, {PP:80100016} M10, Cl 8, M10
30	84334121	1	HOUSING, BEARING, (36)
31	321204	1	NIPPLE, LUBE, {PP:80321204}
32	300479	1	SCREW, {PP:80300479} Hex Soc, M8 x 25, Cup Pt, M8x25
33	89706690	1	NUT, CL 8, M8 x 1.25 x 13.0
34	84434923	1	SUPPORT, , FOR 3HA BELT, BSN C322
34	84453113	1	SUPPORT, , FOR 6HA BELT, ASN D323
35	84054389	1	SLEEVE,
36	412365	1	SLEEVE, {PP:80412365}
38	9838669	2	NIPPLE, LUBE, {PP:89838669}
39	84053211	2	CONNECTOR, HYD.,
41	80300642	2	CIRCLIP,
42	84077122	2	STOP,
43	84334884	6	SHIM,

AMTRUBMO.BY

14.54(01) CROP PRO PLUS TM, HYDRO-DRIVE, TENSION ROLL - LH - C322

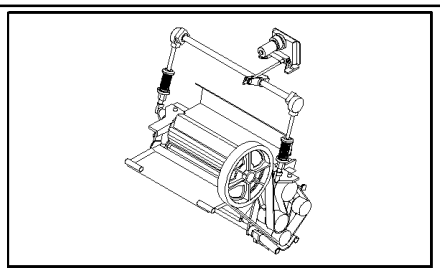

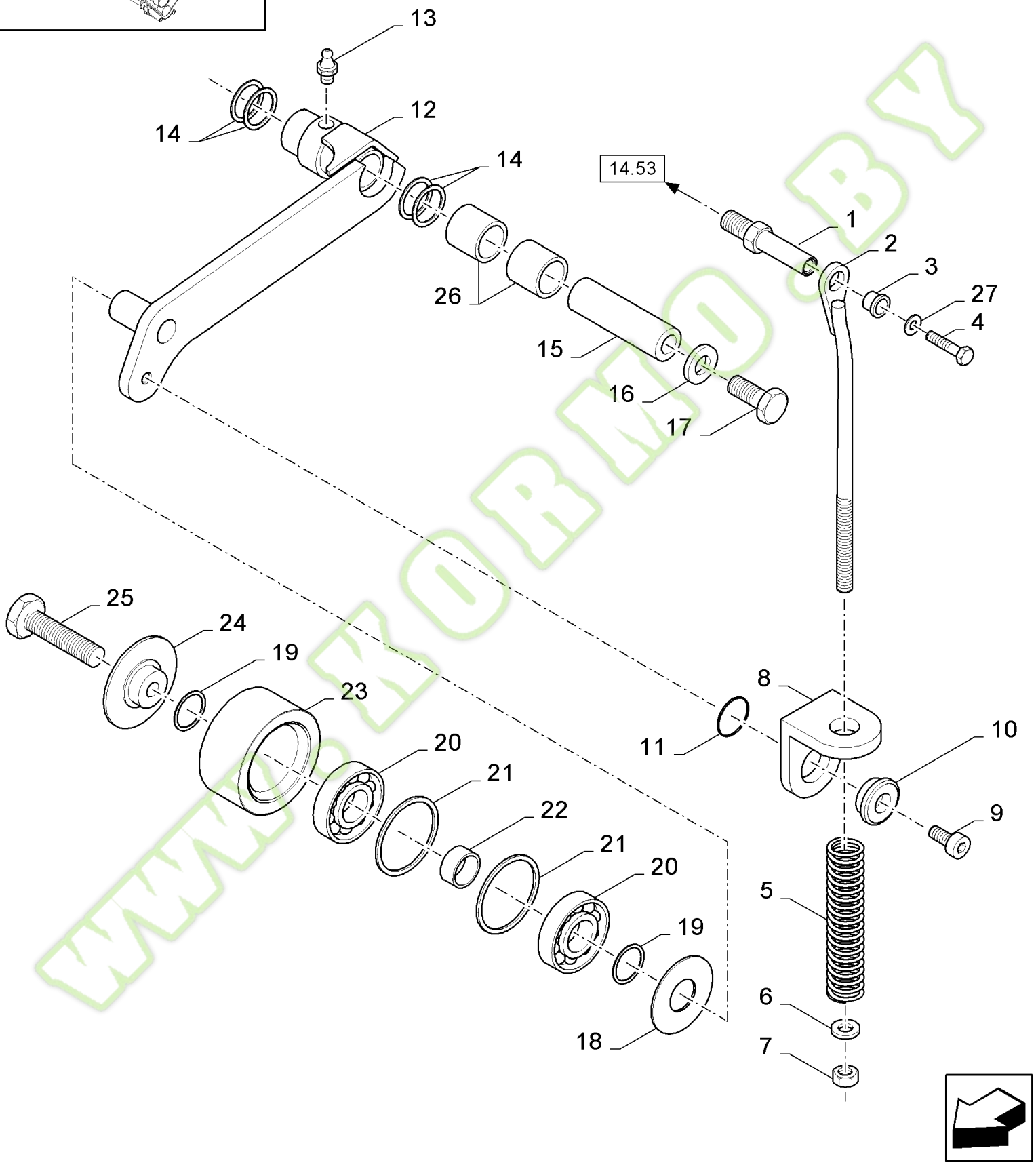

FOR 3HA BELT

FX50 SELF-PROPELLED FORAGE HARVESTER (10/02-)

14.54(01) CROP PRO PLUS TM, HYDRO-DRIVE, TENSION ROLL - LH - C322

Ref	Part Number	Qty	Description
1	84433029	1	SHAFT,
2	84434678	1	ROD,
3	84434679	1	BUSHING,
4	43140	1	BOLT, {PP:80043140} Hex, M10 x 30, 8.8, M10x30
5	84078666	1	SPRING,
6	378245	1	WASHER, {PP:80378245} 12MM
7	89706685	1	NUT, M12
8	84432908	1	BRACKET,
9	412671	1	SCREW, {PP:80412671} Hex Soc Flat Hd, M10 x 20, 8.8,
10	84435970	1	BUSHING,
11	140100	1	WASHER, {PP:80140100}
12	84077579	1	SUPPORT,
13	9838669	1	NIPPLE, LUBE, {PP:89838669}
14	385188	4	SHIM, {PP:80385188}
15	84435640	1	SHAFT,
16	140020	1	WASHER, {PP:80140020} M16 x 30 x 3, 16MM
17	354360	1	SCREW, {PP:80354360} Hex, M16 x 130, 8.8, M16x130
18	84075353	1	WASHER,
19	66288	2	WASHER, {PP:80066288}
20	443898	2	BEARING ASSY, {PP:80443898}
21	370011	2	CIRCLIP, {PP:80370011}
22	84433030	1	BUSHING,
23	84334973	1	WHEEL, IDLER,
24	84434160	1	RING,
25	86528768	1	SCREW, Hex Soc Hd, M10 x 20, 12.9, M10x20
26	80395589	2	SLEEVE,
27	140045	1	WASHER, LOCK, {PP:80140045} Belleville, M10, 10MM

FOR 3HA BELT

www.KOBMO.BY

14.54A(01) CROP PRO PLUS TM, HYDRO-DRIVE, TENSION ROLL - LH - D323

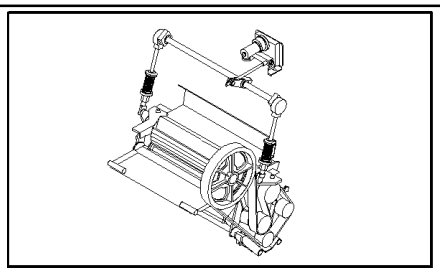

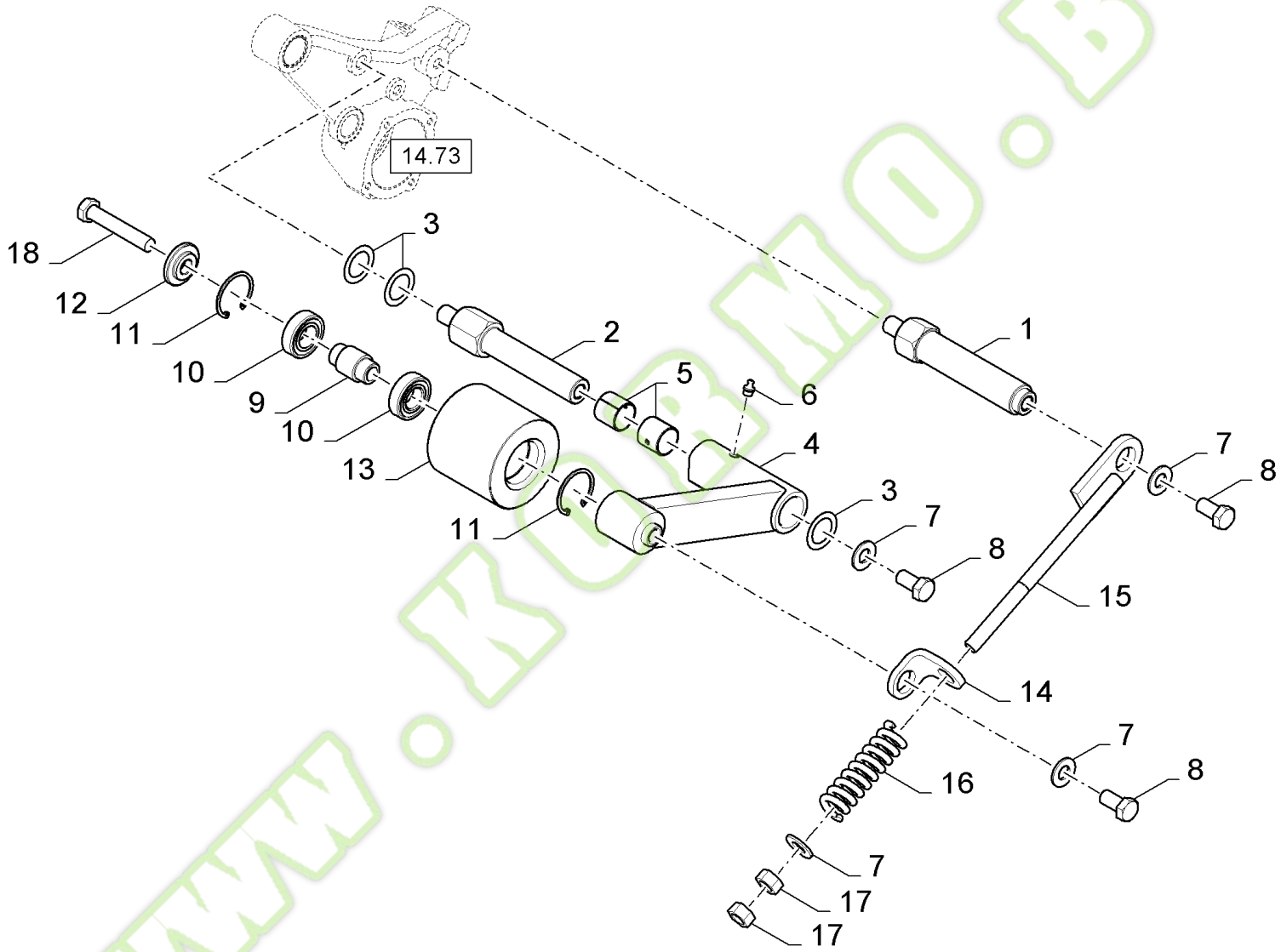

FOR 6HA BELT

FX50 SELF-PROPELLED FORAGE HARVESTER (10/02-)

14.54A(01) CROP PRO PLUS TM, HYDRO-DRIVE, TENSION ROLL - LH - D323

Ref	Part Number	Qty	Description
1	84448772	1	SHAFT,
2	84449702	1	STUD,
3	441176	3	WASHER, {PP:80441176}
4	84449704	1	SUPPORT,
5	420410	2	BUSHING, {PP:80420410}
6	9838669	1	NIPPLE, LUBE, {PP:89838669}
7	378246	4	WASHER, {PP:80378246} 16MM
8	43167	3	BOLT, {PP:80043167} Hex, M16 x 30, 8.8, Full Thd, Hex, M16 x 30, 8.8, Full Thd
9	84069869	1	SPACER,
10	443898	2	BEARING ASSY, {PP:80443898}
11	370011	2	CIRCLIP, {PP:80370011}
12	84453127	1	WASHER,
13	84449786	1	TENSIONER,
14	84448770	1	SUPPORT,
15	84448774	1	ROD, , BSN C322
15	84455603	1	ROD, , ASN D323
16	445013	1	SPRING, {PP:80445013} , BSN C322
16	84818112	1	SPRING, , ASN D323
17	100020	2	NUT, {PP:80100020} M16, Cl 8, M16, Cl 8
18	350616	1	SCREW, {PP:80350616} Hex, M16 x 90, 8.8, M16x90

www.KOBMO.BY

FOR 6HA BELT

14.55(01) CROP PRO PLUS TM, HYDRO-DRIVE, ROLLS - 99T - C357

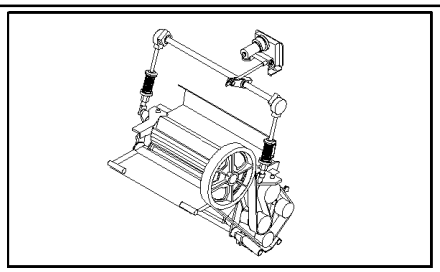

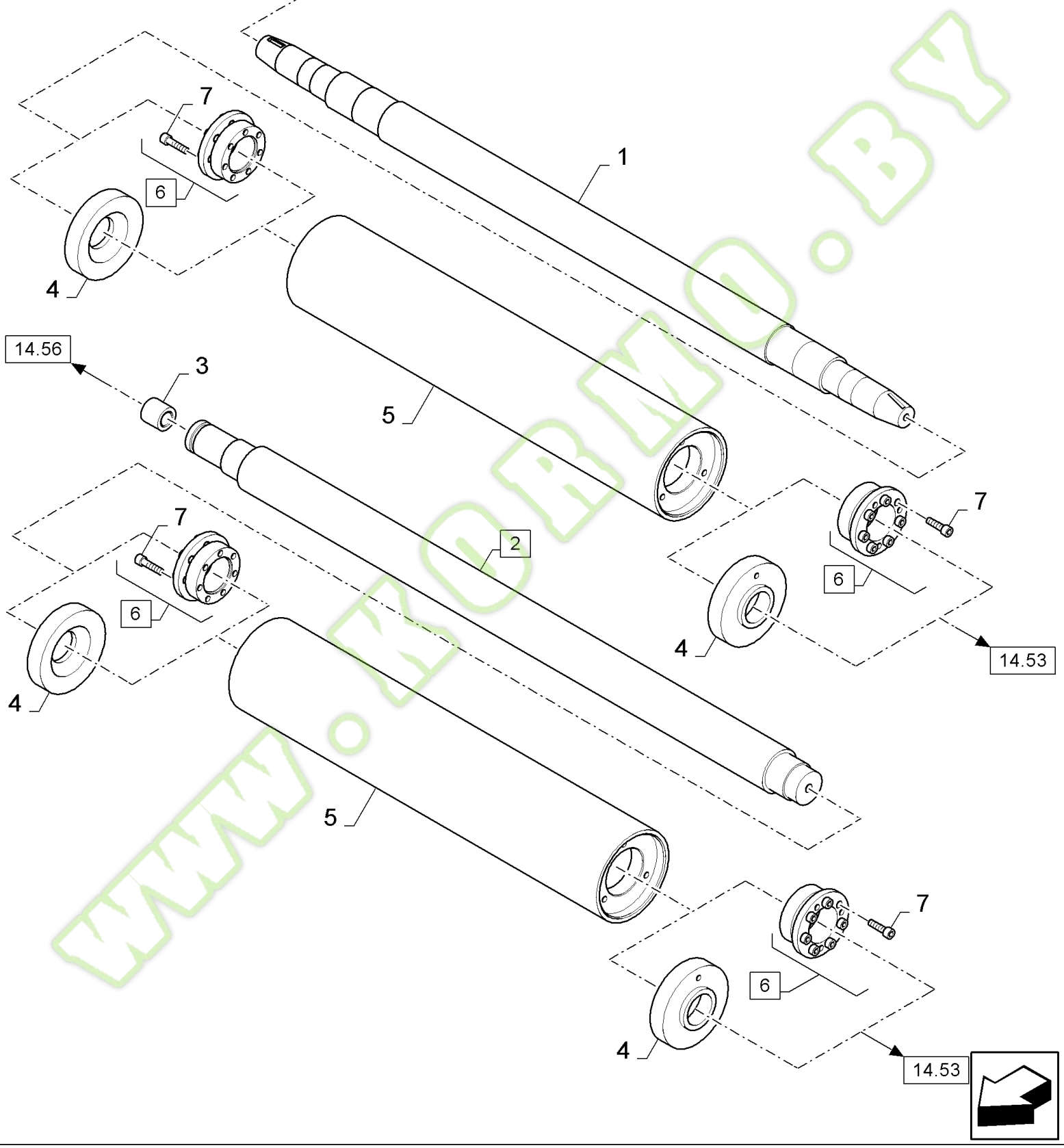

www.robmo.by

FX50 SELF-PROPELLED FORAGE HARVESTER (10/02-)

14.55(01) CROP PRO PLUS TM, HYDRO-DRIVE, ROLLS - 99T - C357

Ref	Part Number	Qty	Description
1	84074960	1	SHAFT, , UPPER, BSN C305
1	84814388	1	SHAFT, , UPPER, ASN D306
2	84078633	1	SHAFT, , LOWER(3)
3	84434744	1	BUSHING,
4	84814419	4	RING, , BSN C281
5	84074961	2	ROLLER, 99T
6	84818644	4	CLAMP, COLLAR, (7), ASN D282
7	84432127	AR	SCREW, Hex Soc Hd, M6 x 25, 12.9, M8x25, ASN D282

WWW.KOBMO.BY

14.55A(01) CROP PRO PLUS TM, HYDRO-DRIVE, ROLLS - 77T - C357

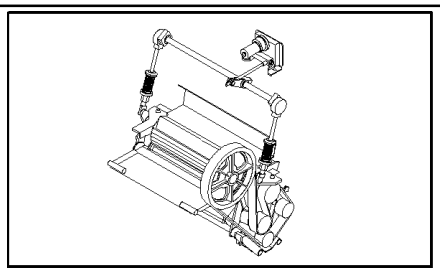

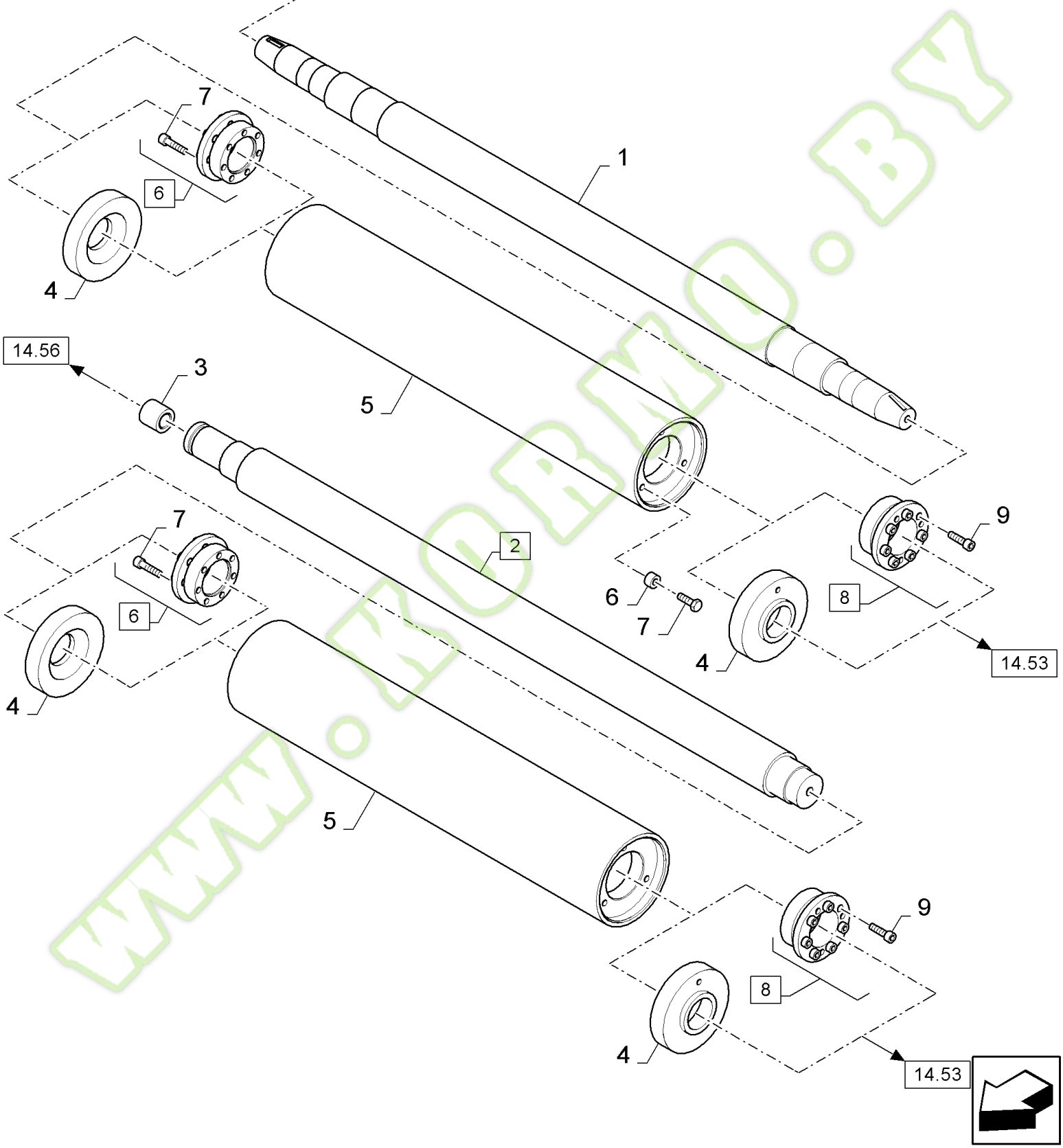

www.robmo.by

FX50 SELF-PROPELLED FORAGE HARVESTER (10/02-)

14.55A(01) CROP PRO PLUS TM, HYDRO-DRIVE, ROLLS - 77T - C357

Ref	Part Number	Qty	Description
1	84074960	1	SHAFT, , BSN C305
1	84814388	1	SHAFT, , ASN D306
2	84078633	1	SHAFT, LOWER(3)
3	84434744	1	BUSHING,
4	84814419	4	RING, , BSN C281
5	84073406	2	ROLLER, 77T
6	84056580	3	BUSHING,
7	300388	3	SCREW, {PP:80300388} Hex, M12 x 25, 8.8, M12x25
8	84818644	4	CLAMP, COLLAR, (9), ASN D282
9	84432127	AR	SCREW, Hex Soc Hd, M6 x 25, 12.9, M8x25, ASN D282

www.KOBMO.BY

14.55B(01) CROP PRO PLUS TM, HYDRO-DRIVE, ROLLS - 132T

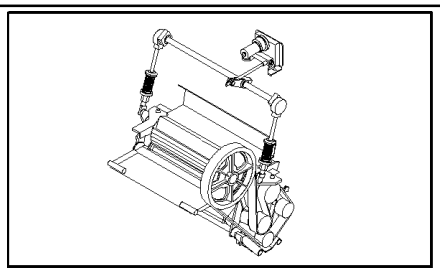

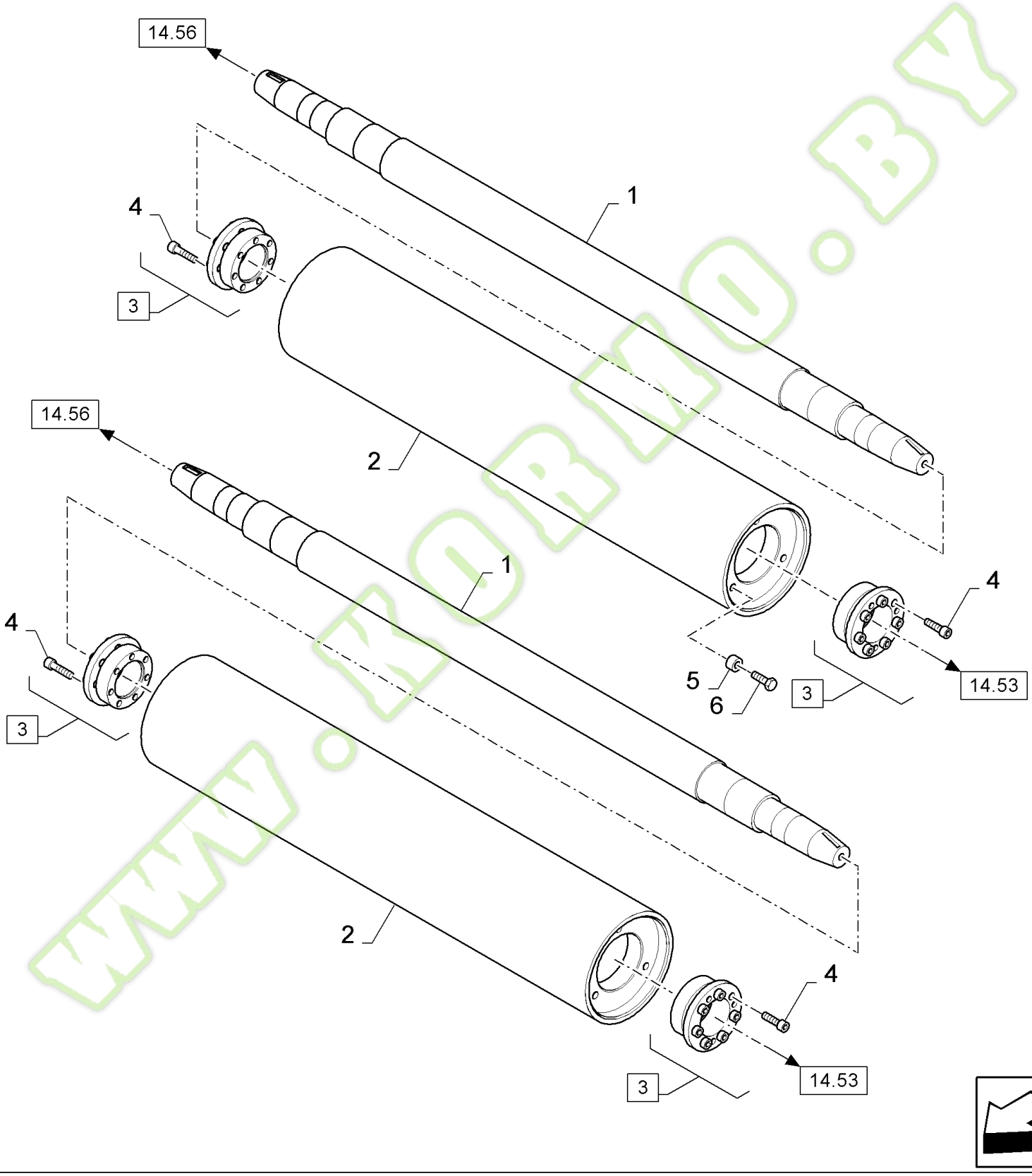

www.robmo.by

FX50 SELF-PROPELLED FORAGE HARVESTER (10/02-)

14.55B(01) CROP PRO PLUS TM, HYDRO-DRIVE, ROLLS - 132T

Ref	Part Number	Qty	Description
1	84074960	2	SHAFT, , BSN C305
1	84814388	2	SHAFT, , ASN D306
2	84441140	2	ROLLER, Sawtooth
3	84818644	4	CLAMP, COLLAR, (4)
4	84432127	AR	SCREW, Hex Soc Hd, M6 x 25, 12.9, M8x25
5	84056580	3	BUSHING,
6	300388	3	SCREW, {PP:80300388} Hex, M12 x 25, 8.8, M12x25

www.KOBMO.BY

14.55C(01) CROP PRO PLUS TM, HYDRO-DRIVE, ROLLS - 77T/99T - D358

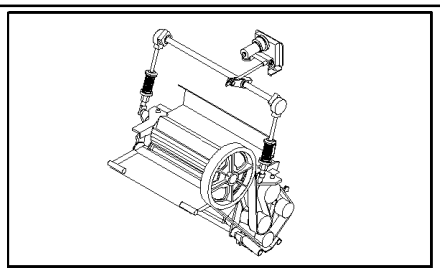

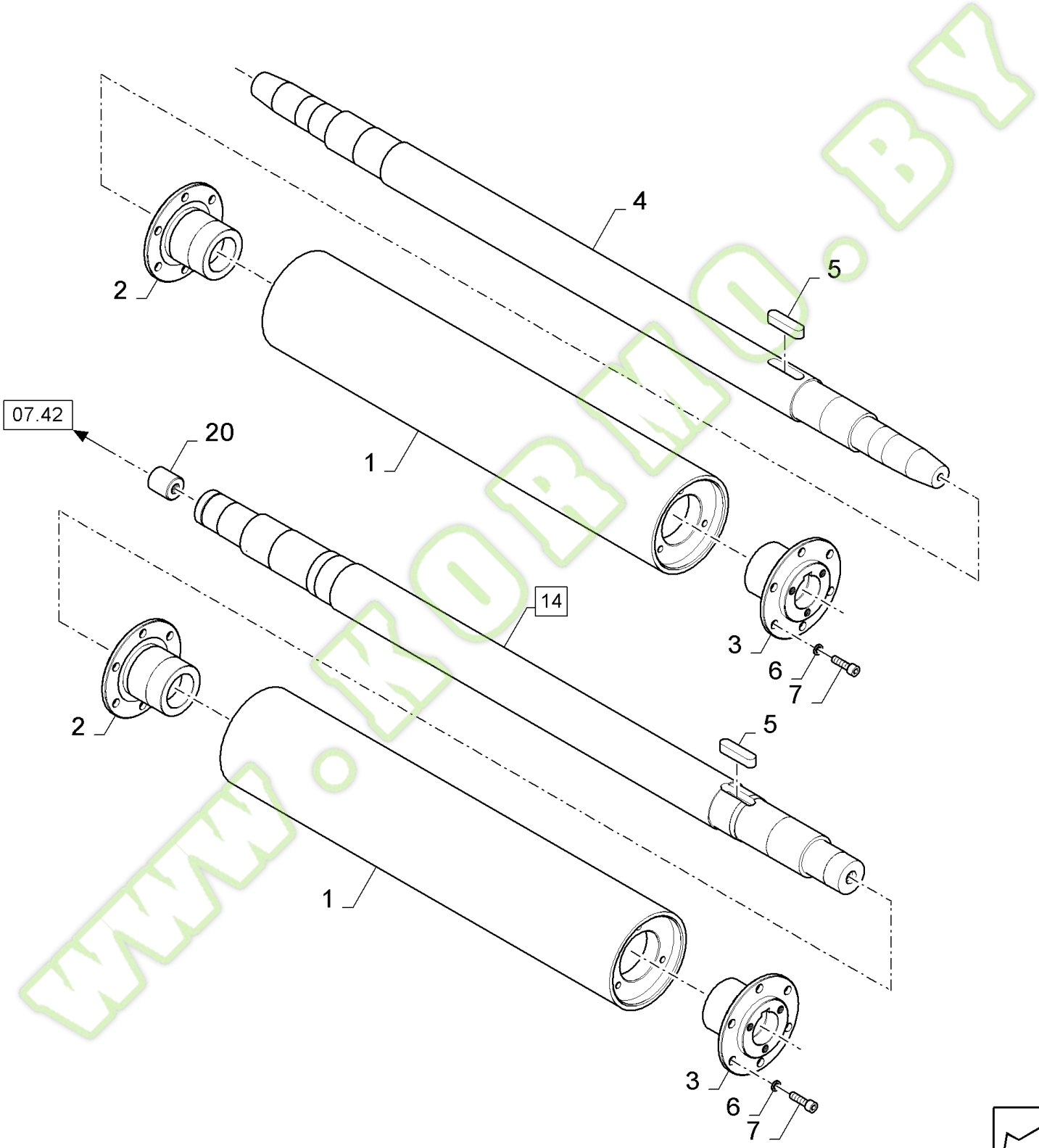

www.robmo.by

FX50 SELF-PROPELLED FORAGE HARVESTER (10/02-)

14.55C(01) CROP PRO PLUS TM, HYDRO-DRIVE, ROLLS - 77T/99T - D358

Ref	Part Number	Qty	Description
1	84073406	2	ROLLER, , 77 SERRATIONS
1	84074961	2	ROLLER, , 99 SERRATIONS
2	84455018	2	FLANGE,
3	84455019	2	FLANGE,
4	84455001	1	SHAFT,
5	84455017	1	KEY,
6	362298	24	WASHER, {PP:80362298} 12MM
7	300388	24	SCREW, {PP:80300388} Hex, M12 x 25, 8.8, M12x25
14	84458117	1	SHAFT,
20	84434744	1	BUSHING, (20)

www.KOBMO.BY

14.56(01) CROP PRO PLUS TM, HYDRO-DRIVE, ROLLS - RH

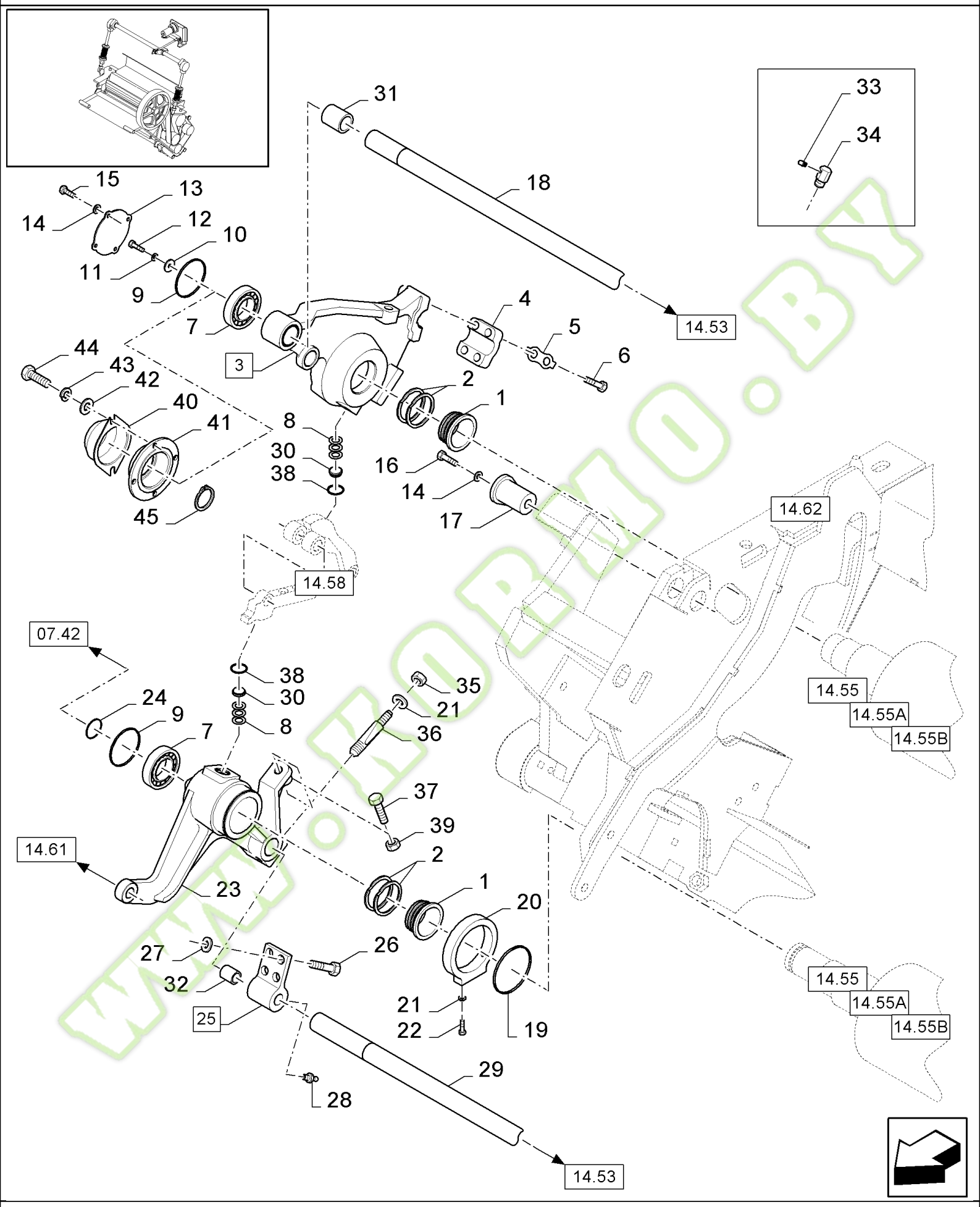

FX50 SELF-PROPELLED FORAGE HARVESTER (10/02-)

14.56(01) CROP PRO PLUS TM, HYDRO-DRIVE, ROLLS - RH

Ref	Part Number	Qty	Description
1	84000853	2	FLANGE,
2	89850344	2	SET OF RINGS,
3	84334899	1	HOUSING, BEARING, (31)
4	84077738	1	CLAMP,
5	84431904	2	PLATE, LOCKING,
6	120068	4	SCREW, {PP:80120068} Hex, M10 x 40, 8.8, Full Thd, M10x40
7	323327	2	BEARING ASSY, {PP:80323327}
8	84334884	6	SHIM,
9	80300633	2	RING, SNAP,
10	9801096	1	WASHER, {PP:89801096}
11	140046	1	WASHER, LOCK, {PP:80140046} Belleville, M12, 12MM
12	9706687	1	SCREW, {PP:89706687} Hex, M12 x 30, 8.8, M12x30
13	84432724	1	COVER,
14	322358	5	WASHER, LOCK, {PP:80322358} Belleville, M8, 8MM
15	120103	4	SCREW, {PP:80120103} Hex, M8 x 16, 8.8, M8x12
16	80120104	1	SCREW, M8x20
17	84075366	1	PIN,
18	84433209	1	SHAFT,
19	370010	1	CIRCLIP, {PP:80370010}
20	84075050	1	BUSHING,
21	140045	3	WASHER, LOCK, {PP:80140045} Belleville, M10, 10MM
22	43139	2	SCREW, {PP:80043139} Hex, M10 x 25, 8.8, Full Thd, M10x25
23	84334860	1	HOUSING, BEARING,
24	370006	1	CIRCLIP, {PP:80370006}
25	84989500	1	HOUSING, BEARING, (32)
26	120090	3	SCREW, {PP:80120090} Hex, M16 x 50, 8.8, Hex, M16 x 50, 8.8
27	140048	3	WASHER, LOCK, {PP:80140048} Belleville, M16, 16MM
28	321204	1	NIPPLE, LUBE, {PP:80321204}
29	84433211	1	SHAFT,
30	84077122	2	STOP,
31	84054389	1	SLEEVE,
32	412365	1	SLEEVE, {PP:80412365}
33	9838669	2	NIPPLE, LUBE, {PP:89838669}
34	84053211	2	CONNECTOR, HYD.,
35	100016	1	NUT, {PP:80100016} M10, Cl 8, M10
36	84989980	1	STUD,
37	394674	1	BOLT, {PP:80394674} Hex, M16 x 80, 8.8, Full Thd, Hex, M16 x 80, 8.8, Full Thd
38	80300642	2	CIRCLIP,
39	100020	1	NUT, {PP:80100020} M16, Cl 8, M16, Cl 8
40	84819754	1	PLATE, , ASN D323
41	84452026	1	COVER, , ASN D323
42	140041	AR	WASHER, {PP:80140041} M8 x 28 x 3, 8MM, ASN D323
43	322358	AR	WASHER, LOCK, {PP:80322358} Belleville, M8, , ASN D323
44	120103	2	SCREW, {PP:80120103} Hex, M8 x 16, 8.8, M8x16, ASN D323
45	440442	1	CIRCLIP, {PP:80440442} , ASN D323

CMD.MOEMO.BY

14.57(01) CROP PRO PLUS TM, HYDRO-DRIVE, ROLL ADJUSTMENT - UPPER

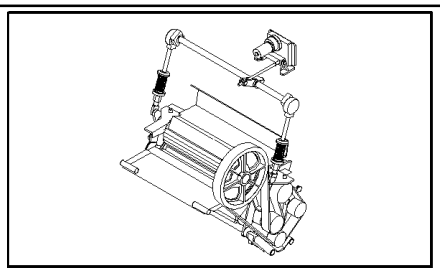

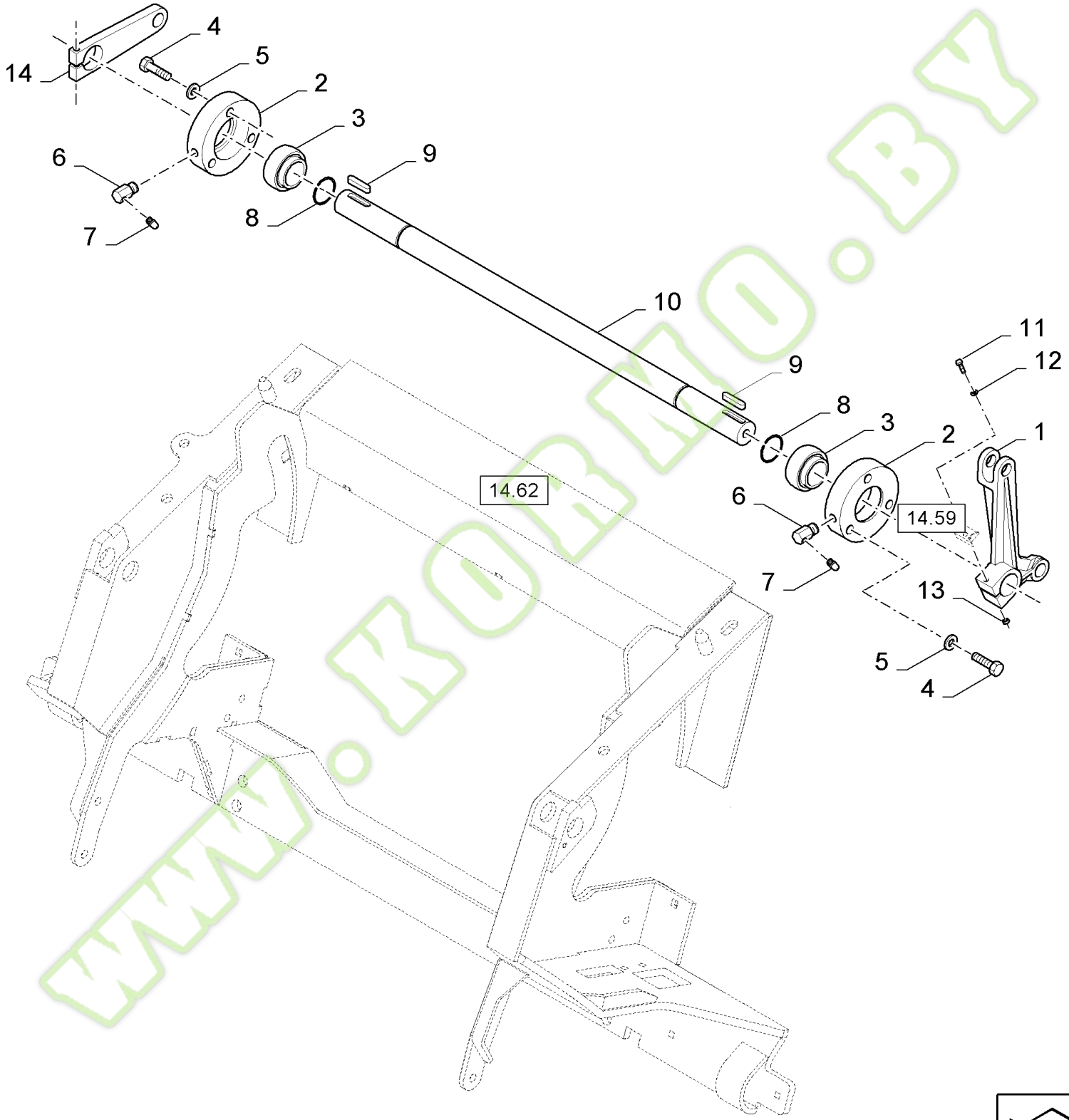

www.KOBMO.BY

FX50 SELF-PROPELLED FORAGE HARVESTER (10/02-)

14.57(01) CROP PRO PLUS TM, HYDRO-DRIVE, ROLL ADJUSTMENT - UPPER

Ref	Part Number	Qty	Description
1	84334827	1	LINK, LIFT,
2	84334577	2	HOUSING, BEARING,
3	84334566	2	BEARING ASSY,
4	325829	6	SCREW, {PP:80325829} Hex, M10 x 45, 8.8, M10x45
5	140045	6	WASHER, LOCK, {PP:80140045} Belleville, M10, 10MM
6	84053211	2	CONNECTOR, HYD.,
7	9838669	2	NIPPLE, LUBE, {PP:89838669}
8	370004	2	CIRCLIP, {PP:80370004}
9	354775	2	KEY, {PP:80354775}
10	84433210	1	SHAFT,
12	140045	2	WASHER, LOCK, {PP:80140045} Belleville, M10, 10MM
13	100016	2	NUT, {PP:80100016} M10, Cl 8, M10
14	84334817	1	LINK, LIFT,
11	43144	2	SCREW, {PP:80043144} Hex, M10 x 70, 8.8, M10x70

www.KOBMO.BY

14.58(01) CROP PRO PLUS TM, HYDRO-DRIVE, ROLL ADJUSTMENT - LOWER

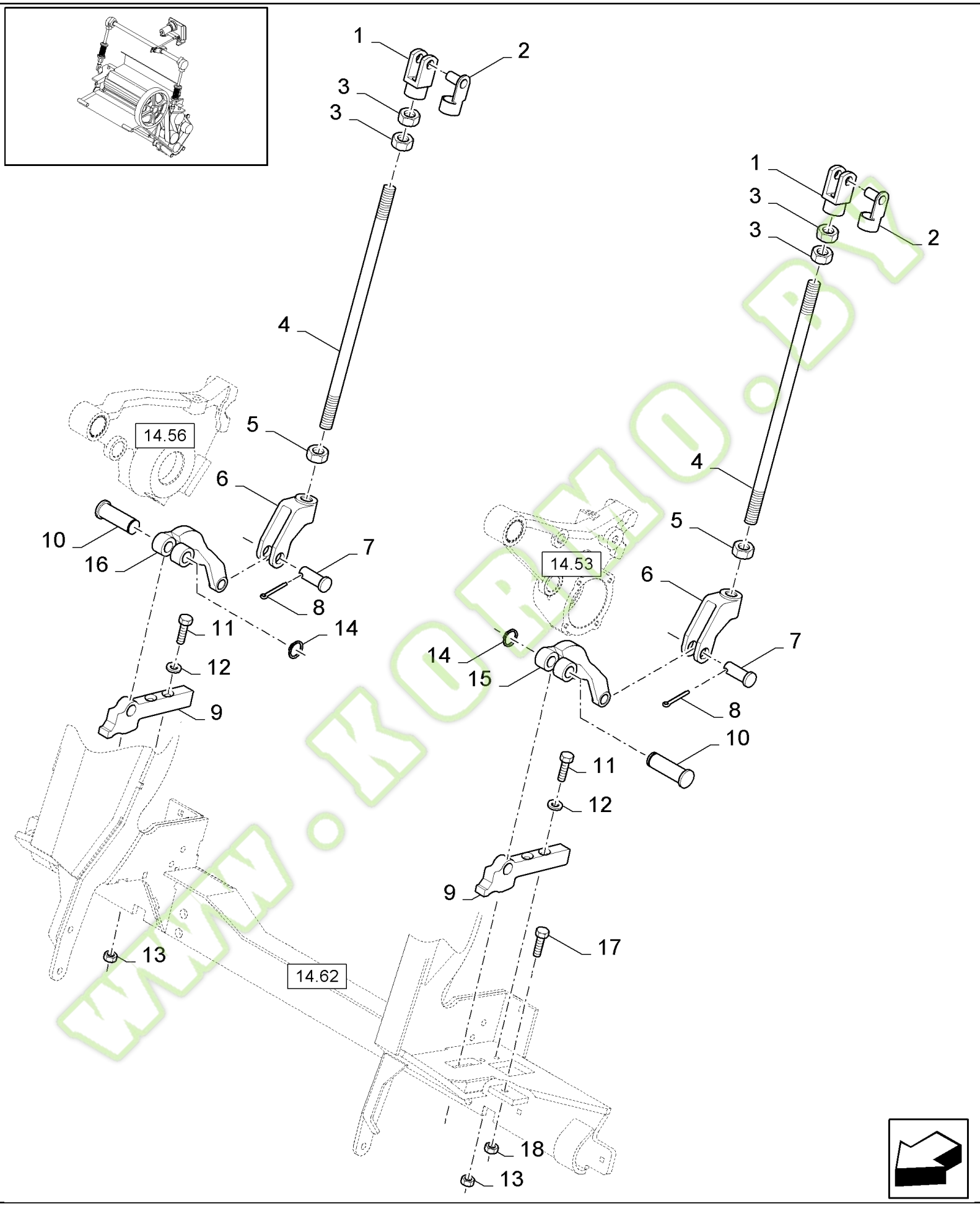

www.KOBMO.BY

FX50 SELF-PROPELLED FORAGE HARVESTER (10/02-)

14.58(01) CROP PRO PLUS TM, HYDRO-DRIVE, ROLL ADJUSTMENT - LOWER

Ref	Part Number	Qty	Description
1	9811840	2	CLEVIS, {PP:89811840}
2	84078959	2	CLEVIS,
3	100020	4	NUT, {PP:80100020} M16, Cl 8, M16, Cl 8
4	84334269	2	STUD, , BSN C281
4	84448093	2	STUD, , ASN D282
5	89505466	2	NUT, M16, BSN C281
5	84011539	2	NUT, Thin, M20 x 1.5, Cl 05, LH, M16, ASN D282
6	84435919	2	FORK, , BSN C281
6	84448095	2	YOKE, , ASN D282
7	390089	2	SPINDLE, {PP:80390089}
8	130007	2	PIN, SPLIT (COTTER), {PP:80130007} M4 x 25,
9	84440700	2	CAM,
10	84073494	2	PIN,
11	325829	4	SCREW, {PP:80325829} Hex, M10 x 45, 8.8, M10x45
12	140045	4	WASHER, LOCK, {PP:80140045} Belleville, M10, 10MM
13	100016	4	NUT, {PP:80100016} M10, Cl 8, M10
14	300627	2	RING, SNAP, {PP:80300627}
15	84432431	1	CAM,
16	84432411	1	CAM,
17	120122	2	SCREW, {PP:80120122} Hex, M12 x 50, 8.8, Full Thd, M12x50
18	89706685	2	NUT, M12

www.KOBMO.BY

14.59(01) CROP PRO PLUS TM, HYDRO-DRIVE, ELECTRICAL CONTROL

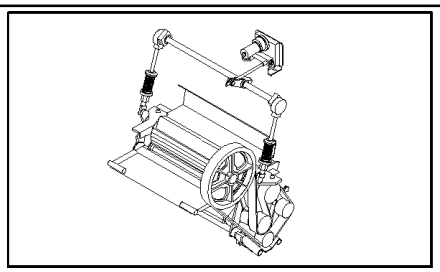

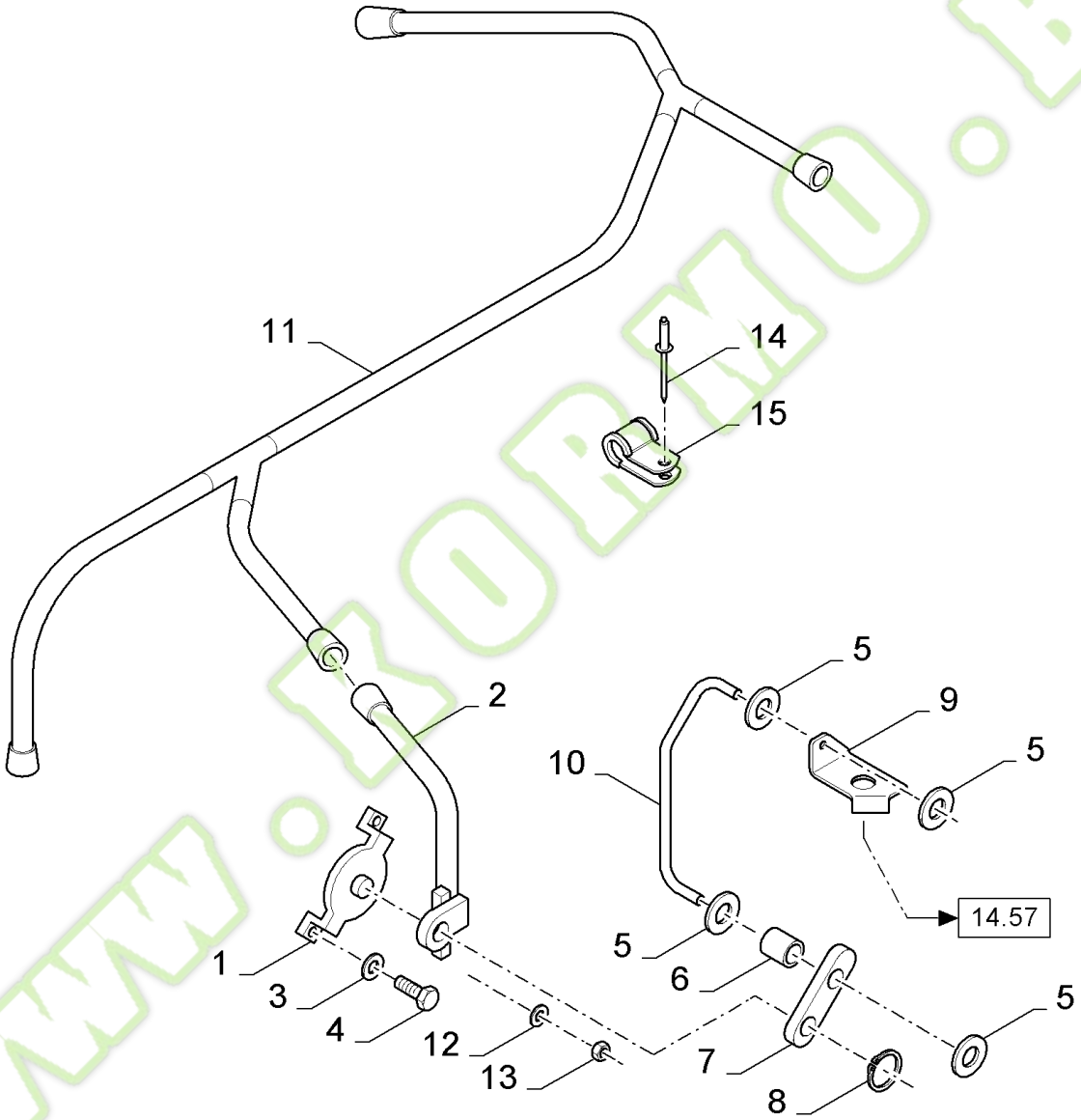

www.KORMO.BY

FX50 SELF-PROPELLED FORAGE HARVESTER (10/02-)

14.59(01) CROP PRO PLUS TM, HYDRO-DRIVE, ELECTRICAL CONTROL

Ref	Part Number	Qty	Description
1	E6NNT936AA	1	BRACKET, {PP:83981890}
2	9594791	1	SENSOR, {PP:89594791}
3	140045	2	WASHER, LOCK, {PP:80140045} Belleville, M10, 10MM
4	43138	2	SCREW, {PP:80043138} Hex, M10 x 20, 8.8, Full Thd, M10x20
5	398561	4	CLIP, {PP:80398561}
6	E6NNT934AA	1	BUSHING, {PP:83981915}
7	E6NNT933AA	1	LEVER, {PP:83981913}
8	N663107S36	1	CIRCLIP, {PP:83981963}
9	84432815	1	SUPPORT,
10	84433191	1	ROD,
11	84432383	1	HARNESS, WIRE,
12	322355	1	WASHER, LOCK, {PP:80322355} Belleville, M4, 4MM
13	100012	1	NUT, {PP:80100012} M4, Cl 8, M4
14	NS	1	NOT SERVICED, Rivet
15	84818442	1	CLAMP,

www.KOBMO.BY

14.60(01) CROP PRO PLUS TM, HYDRO-DRIVE, ELECTRICAL CONTROL ENGINE

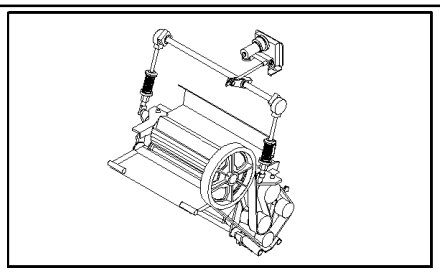

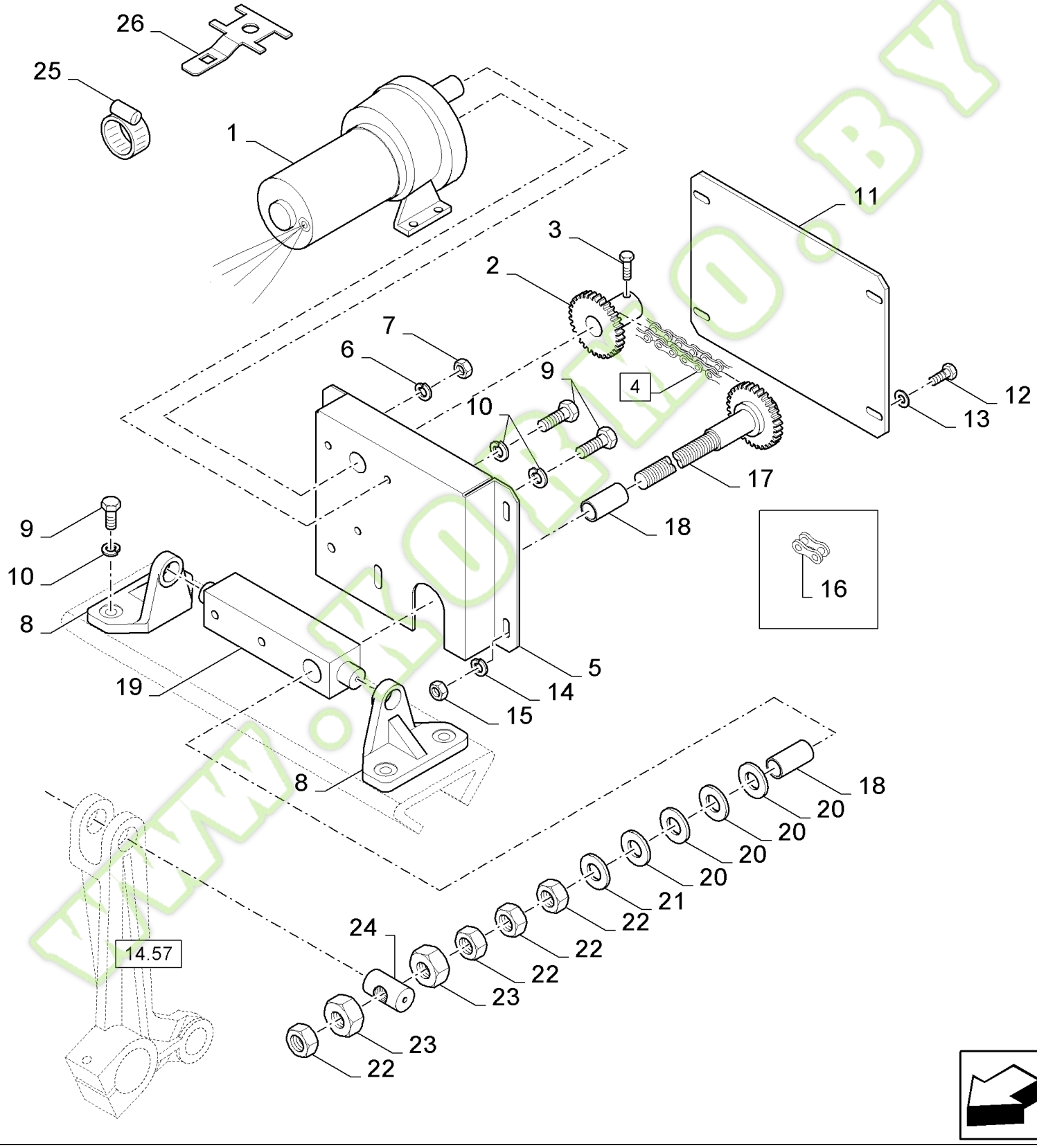

FX50 SELF-PROPELLED FORAGE HARVESTER (10/02-)

14.60(01) CROP PRO PLUS TM, HYDRO-DRIVE, ELECTRICAL CONTROL ENGINE

Ref	Part Number	Qty	Description
1	84019727	1	MOTOR, ELECTRIC, SMALL,
2	84017037	1	SPROCKET, DRIVEN,
3	84012755	1	SCREW, Hex Soc, M6 x 5, M6x5
4	84036397	1	CHAIN, (16)
5	84036403	1	SUPPORT,
6	322357	2	WASHER, LOCK, {PP:80322357} Belleville, M6, Belleville, M6
7	88542	2	SCREW, {PP:80088542} Hex, 1/4"-20 x 1/2", G5, Full Thd, .25"x50"
8	84036413	2	HOUSING, BEARING,
9	43139	6	SCREW, {PP:80043139} Hex, M10 x 25, 8.8, Full Thd, M10x25
10	140045	6	WASHER, LOCK, {PP:80140045} Belleville, M10, 10MM
11	84036401	1	PLATE,
12	120103	4	SCREW, {PP:80120103} Hex, M8 x 16, 8.8, M8x16
13	378243	4	WASHER, {PP:80378243}
14	322358	4	WASHER, LOCK, {PP:80322358} Belleville, M8, 8MM
15	89706690	4	NUT, CL 8, M8 x 1.25 x 13.0
16	25195	1	LINK, CONNECTING, {PP:80025195}
17	84054410	1	ROD, THREADED,
18	382975	2	BUSHING, {PP:80382975}
19	84058650	1	SUPPORT,
20	168100	4	SHIM, {PP:80168100}
21	378247	1	WASHER, {PP:80378247} 20MM
22	320771	4	NUT, {PP:80320771} Thin, M20 x 1.5, Cl 04, M20x1.5
23	84036420	2	NUT, M20x1.5
24	84056346	1	PIN,
25	381145	1	CLAMP, {PP:80381145}
26	84032700	1	SUPPORT,

www.KORMO.BY

14.61(01) CROP PRO PLUS TM, HYDRO-DRIVE, SWITCH OVER SYSTEM MAIZE/GRASS

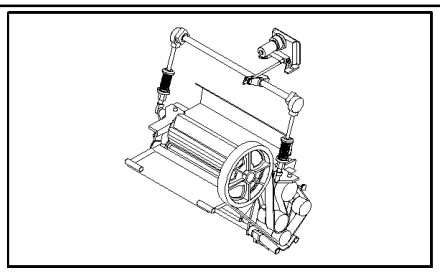

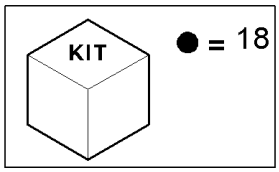

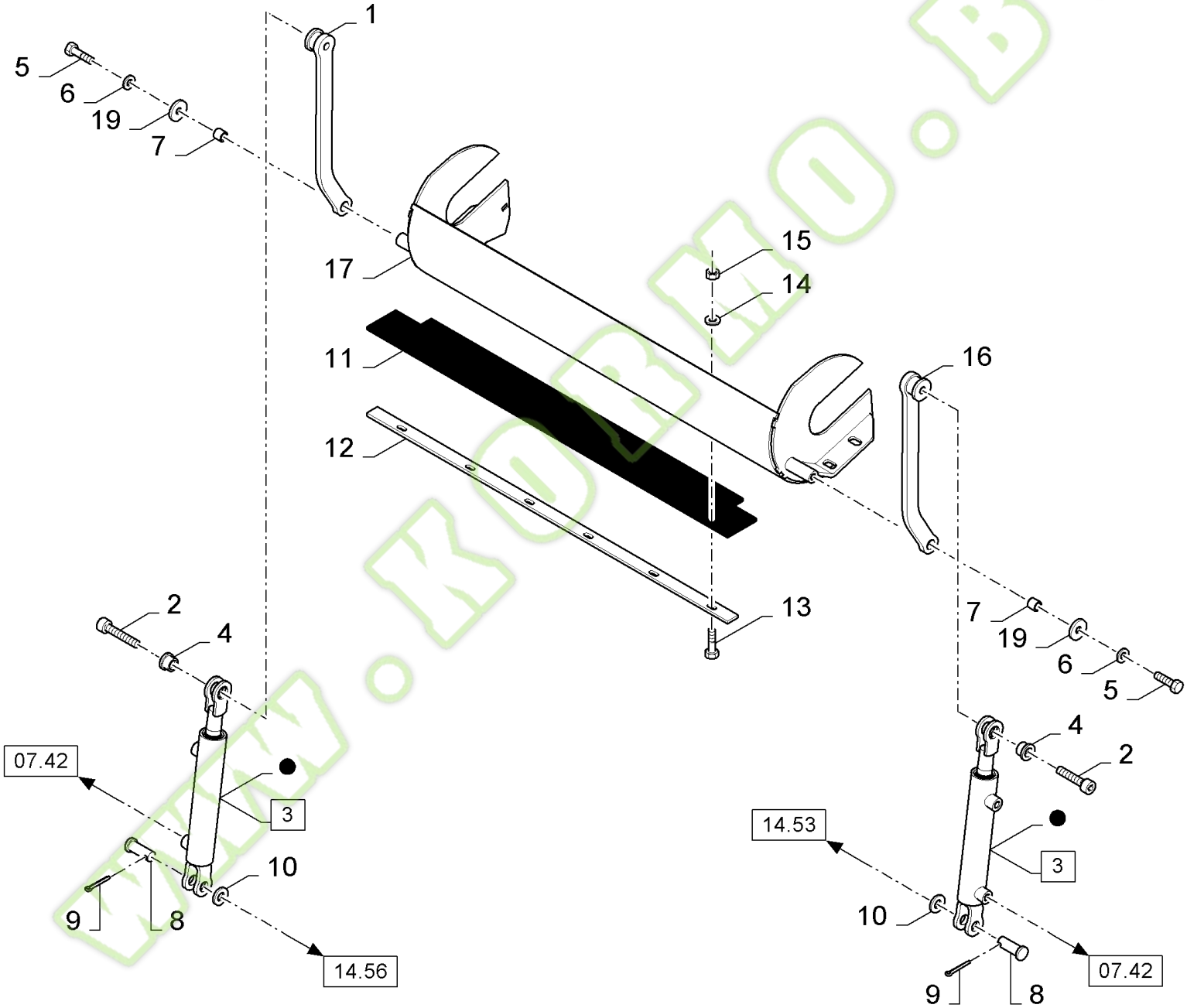

WWW.KOBHO.BY

FX50 SELF-PROPELLED FORAGE HARVESTER (10/02-)

14.61(01) CROP PRO PLUS TM, HYDRO-DRIVE, SWITCH OVER SYSTEM MAIZE/GRASS

Ref	Part Number	Qty	Description
1	84432540	1	LINK/SHACKLE,
2	280685	2	SCREW, {PP:80280685} Hex Soc Hd, M12 x 40, 12.9, M12x40
3	84431304	2	HYDRAULIC CYLINDER, , BSN C289
3	84448286	2	HYDRAULIC CYLINDER, (18), BSN F290333
3	84455840	2	HYDRAULIC CYLINDER, (18), ASN D334
4	84433199	2	BUSHING,
5	43140	2	BOLT, {PP:80043140} Hex, M10 x 30, 8.8, M10x30
6	378244	2	WASHER, LOCK, {PP:80378244} 10MM
7	84433200	2	BUSHING,
8	80412131	2	PIN, LOCK,
9	412686	2	PIN, SPLIT (COTTER), {PP:80412686} M5 x 32,
10	378247	2	WASHER, {PP:80378247} 20MM
11	84073770	1	CANVAS,
12	84432543	1	PLATE,
13	308761	6	SCREW, {PP:80308761} Short NK, M8 x 25, Cl8.8, Full Thd, M8x25
14	322358	6	WASHER, LOCK, {PP:80322358} Belleville, M8, 8MM
15	86629542	6	NUT, M8 x 1.25", Cl 8, M8
16	84432541	1	LINK/SHACKLE,
17	84434682	1	COVER, , BSN C281
17	84448855	1	COVER, , ASN D282
18	84819752	2	KIT, SEALS, , ASN D290
19	140045	2	WASHER, LOCK, {PP:80140045} Belleville, M10, 10MM

www.KORMO.BY

14.62(01) CROP PRO PLUS TM, HYDRO-DRIVE, FRAME AND GUARDS

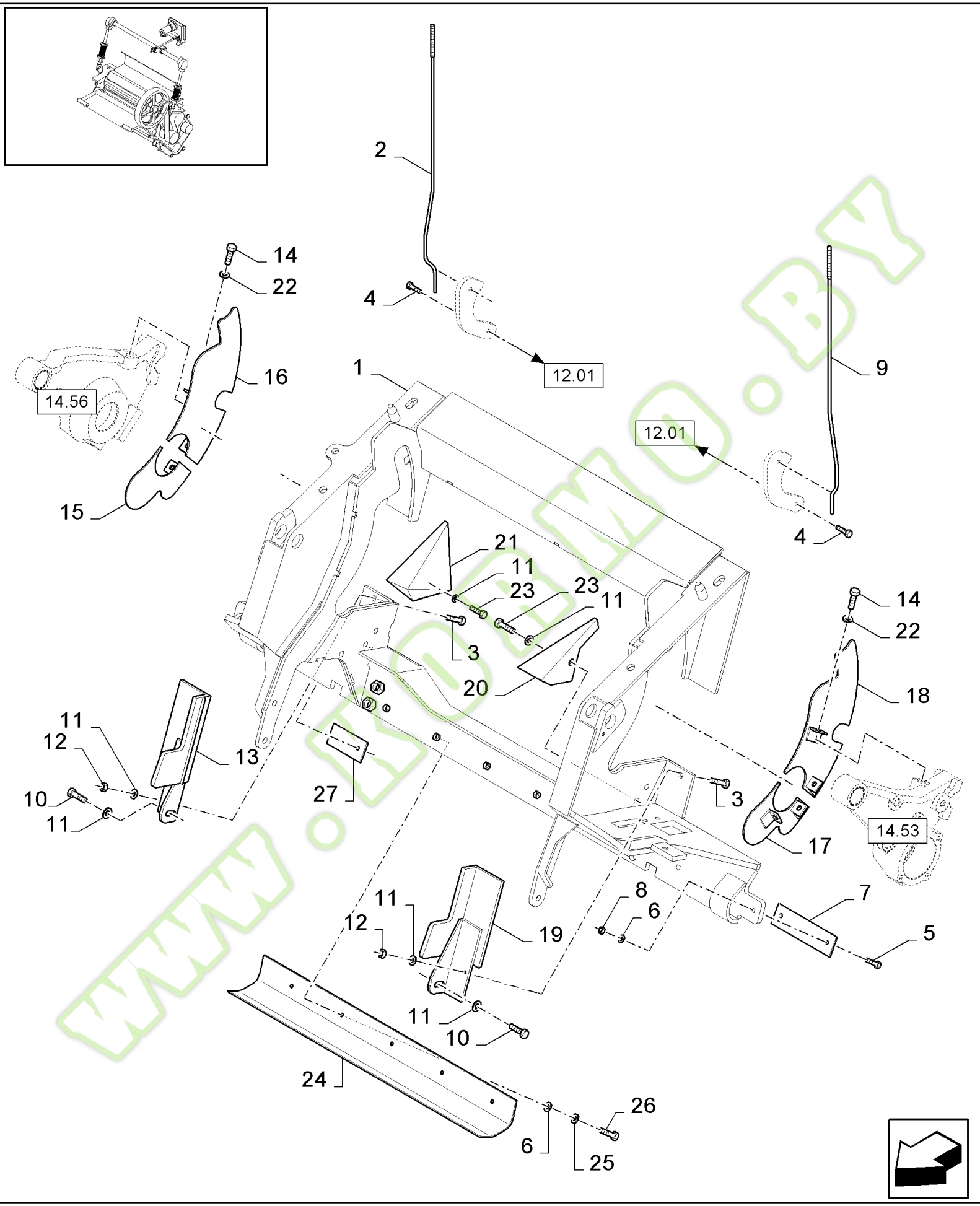

FX50 SELF-PROPELLED FORAGE HARVESTER (10/02-)

14.62(01) CROP PRO PLUS TM, HYDRO-DRIVE, FRAME AND GUARDS

Ref	Part Number	Qty	Description
1	84989054	1	FRAME, , FOR 3HA BELT, BSN C322
1	84452249	1	FRAME, , FOR 6HA BELT, ASN D323
2	84432718	1	ROD, , FOR 3HA BELT, BSN C322
2	84453020	1	ROD, , FOR 6HA BELT, ASN D323
3	338949	2	SCREW, {PP:80338949} Short NK, M10 x 25, Cl8.8, Full Thd,
4	86512444	2	SCREW, Short NK, M8 x 40, Cl8.8, Full Thd, M8x40
5	120038	4	BOLT, {PP:80120038} Short NK, M8 x 30, Cl8.8, Full Thd, M8x30
6	322358	9	WASHER, LOCK, {PP:80322358} Belleville, M8, 8MM
7	84432675	2	SHIM,
8	89706690	4	NUT, CL 8, M8 x 1.25 x 13.0
9	84432715	1	ROD,
10	120068	2	SCREW, {PP:80120068} Hex, M10 x 40, 8.8, Full Thd, M10x40
11	140045	6	WASHER, LOCK, {PP:80140045} Belleville, M10, 10MM
12	100016	2	NUT, {PP:80100016} M10, Cl 8, M10
13	84073236	1	PLATE, COVER,
14	80120104	8	SCREW, M8x20
15	84073473	1	PLATE, COVER,
16	84073467	1	PLATE, COVER,
17	84073441	1	PLATE, COVER,
18	84073427	1	PLATE, COVER,
19	84073227	1	PLATE, COVER,
20	84001328	1	PLATE, SKID,
21	84001329	1	PLATE, SKID,
22	412650	8	WASHER, LOCK, {PP:80412650} Belleville, M8,
23	43140	2	BOLT, {PP:80043140} Hex, M10 x 30, 8.8, M10x30
24	84448879	1	PLATE,
25	378243	5	WASHER, {PP:80378243} 8MM
26	43127	5	BOLT, {PP:80043127} Hex, M8 x 25, 8.8, M8x25
27	84455927	1	SHIM, , ASN D323

www.KOBMO.BY

14.63(01) CROP PRO PLUS TM, HYDRO-DRIVE, GUIDES

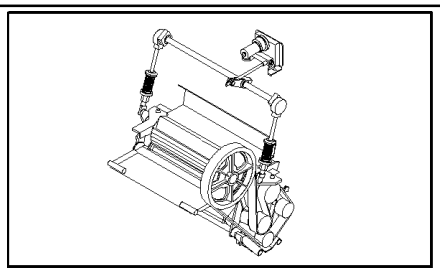

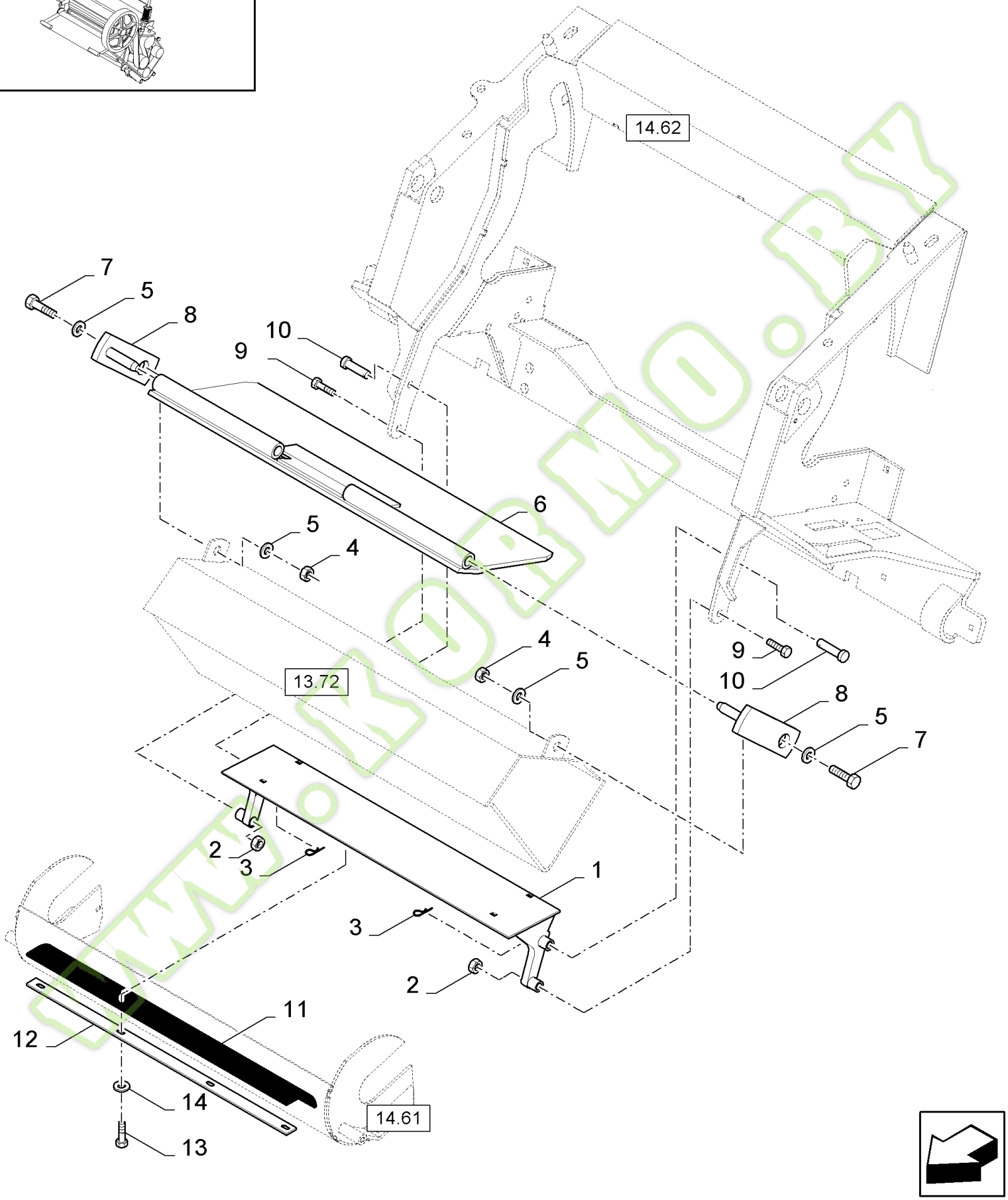

FX50 SELF-PROPELLED FORAGE HARVESTER (10/02-)

14.63(01) CROP PRO PLUS TM, HYDRO-DRIVE, GUIDES

Ref	Part Number	Qty	Description
1	84438305	1	SUPPORT,
2	100038	2	NUT, LOCK, {PP:80100038} M12 x 1.75, Cl 8, M12
3	370539	2	PIN, SPLIT (COTTER), {PP:80370539}
4	89706685	2	NUT, M12
5	140046	4	WASHER, LOCK, {PP:80140046} Belleville, M12, 12MM
6	84334020	1	PLATE,
7	9706687	AR	SCREW, {PP:89706687} Hex, M12 x 30, 8.8, M12x30
8	84045688	2	PIN,
9	80300809	2	SCREW, M12x65
10	84018348	2	PIN, CLEVIS,
11	84435048	1	CANVAS,
12	84435108	1	PLATE, FIXING,
13	80120104	4	SCREW, M8x20
14	322358	4	WASHER, LOCK, {PP:80322358} Belleville, M8, 8MM

www.KOBMO.BY

14.69(01) CPP - WELD COMPONENTS TO ALLOW CUTTERHEAD LIFT CYLINDER TO BE MOVED - C322

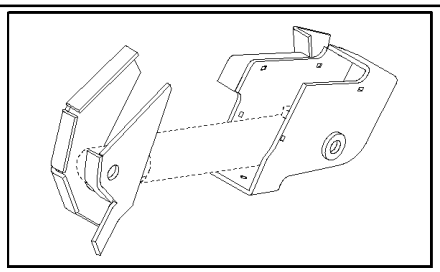

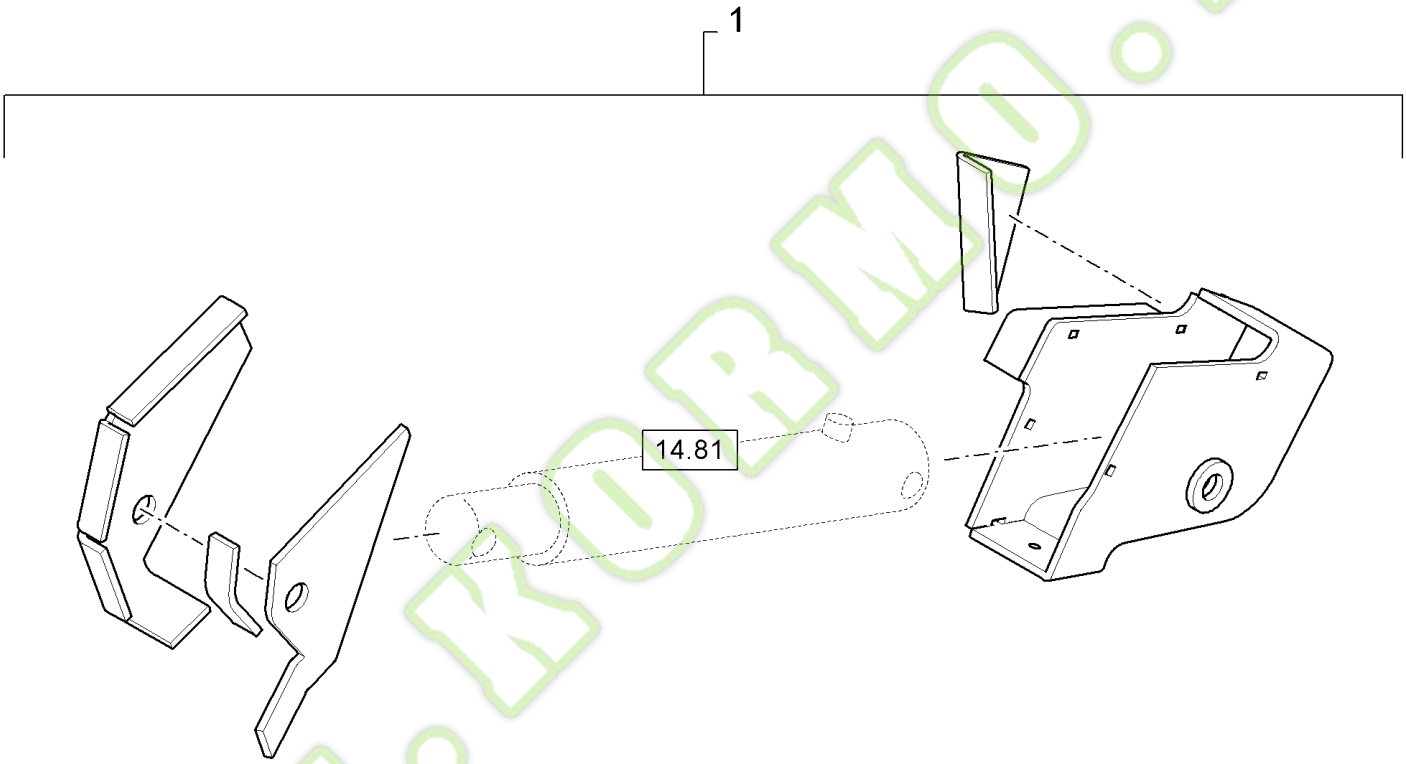

www.ROBMO.BY

FX50 SELF-PROPELLED FORAGE HARVESTER (10/02-)

14.69(01) CPP - WELD COMPONENTS TO ALLOW CUTTERHEAD LIFT CYLINDER TO BE MOVED - C322

Ref	Part Number	Qty	Description
1	84455895	1	KIT, SERVICE,

www.KORMO.BY

14.70(01) CPP - REBUILD KIT FOR CUTTERHEAD TO CPP TOP ROLL DRIVE - 3HA TO 6HA

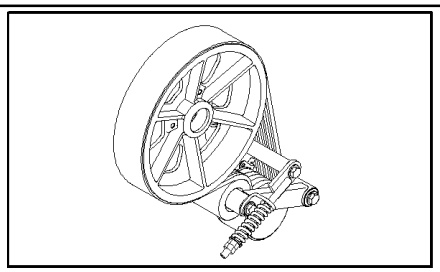

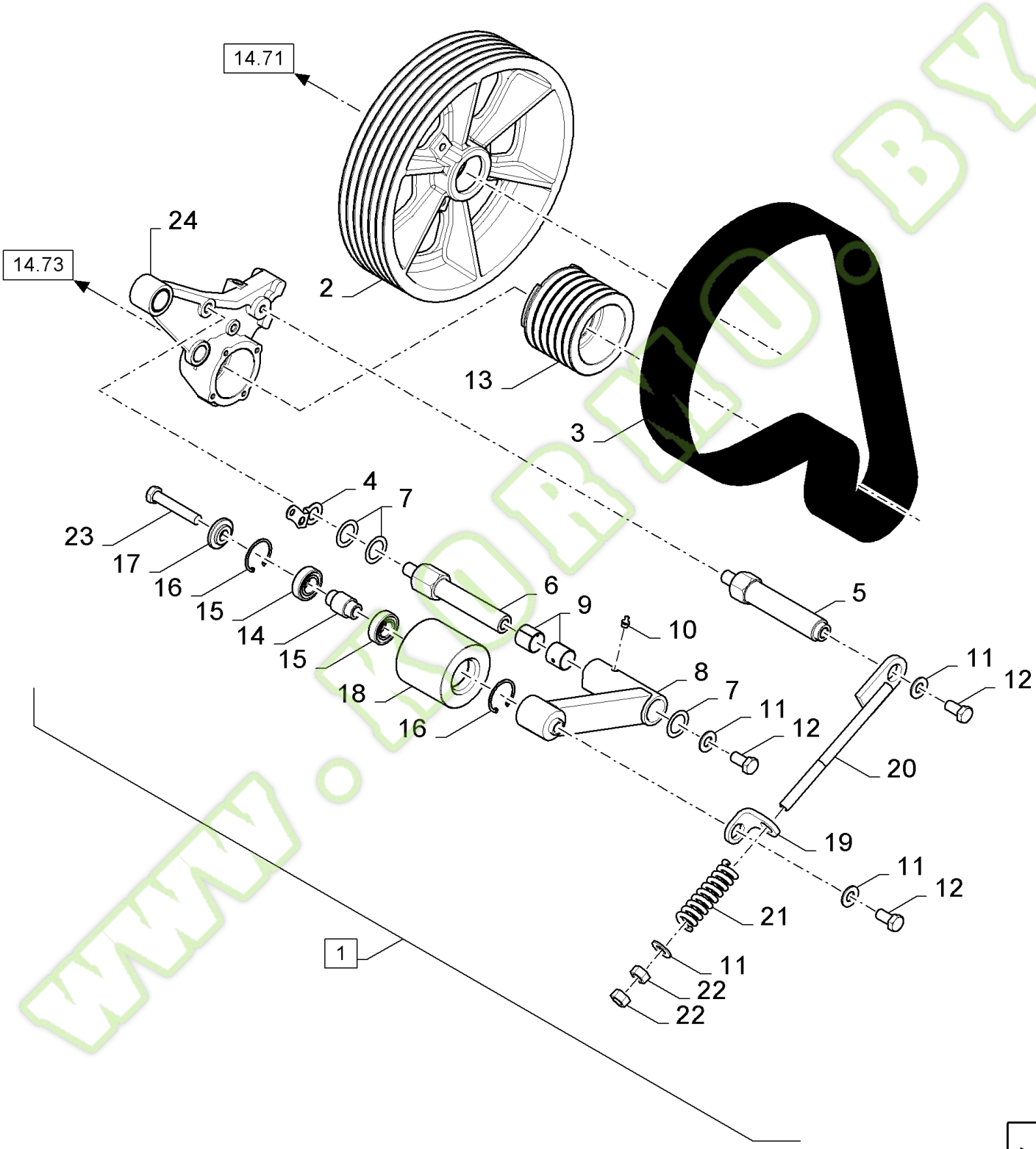

www.KOBETO.BY

FX50 SELF-PROPELLED FORAGE HARVESTER (10/02-)

14.70(01) CPP - REBUILD KIT FOR CUTTERHEAD TO CPP TOP ROLL DRIVE - 3HA TO 6HA

Ref	Part Number	Qty	Description
1	84454199	1	KIT, SERVICE, (2 to 24)
2	84448438	1	PULLEY,
3	84448759	1	BELT,
4	84453113	1	SUPPORT,
5	84448772	1	SHAFT,
6	84449702	1	STUD,
7	441176	3	WASHER, {PP:80441176}
8	84449704	1	SUPPORT,
9	420410	2	BUSHING, {PP:80420410}
10	9838669	1	NIPPLE, LUBE, {PP:89838669}
11	378246	4	WASHER, {PP:80378246} 16MM
12	43167	3	BOLT, {PP:80043167} Hex, M16 x 30, 8.8, Full Thd, Hex, M16 x 30, 8.8, Full Thd
13	84448440	1	PULLEY, DRIVEN,
14	84069869	1	SPACER,
15	443898	2	BEARING ASSY, {PP:80443898}
16	370011	2	CIRCLIP, {PP:80370011}
17	84453127	1	WASHER,
18	84449786	1	TENSIONER,
19	84448770	1	SUPPORT,
20	84448774	1	ROD, , BSN C333
20	84455603	1	ROD, , ASN D334
21	445013	1	SPRING, {PP:80445013} , BSN C333
21	84818112	1	SPRING, , ASN D334
22	100020	2	NUT, {PP:80100020} M16, Cl 8, M16, Cl 8
23	350616	1	SCREW, {PP:80350616} Hex, M16 x 90, 8.8, M16x90
24	84449396	1	HOUSING, BEARING,

www.KUBMO.BY

14.71(01) CROP PRO PLUS TM, BELT DRIVE, BELT AND PULLEY'S - LH

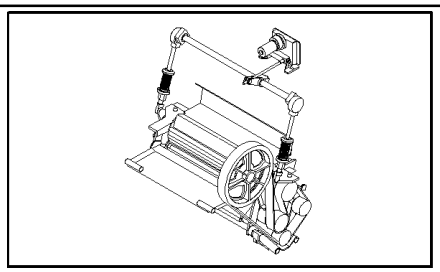

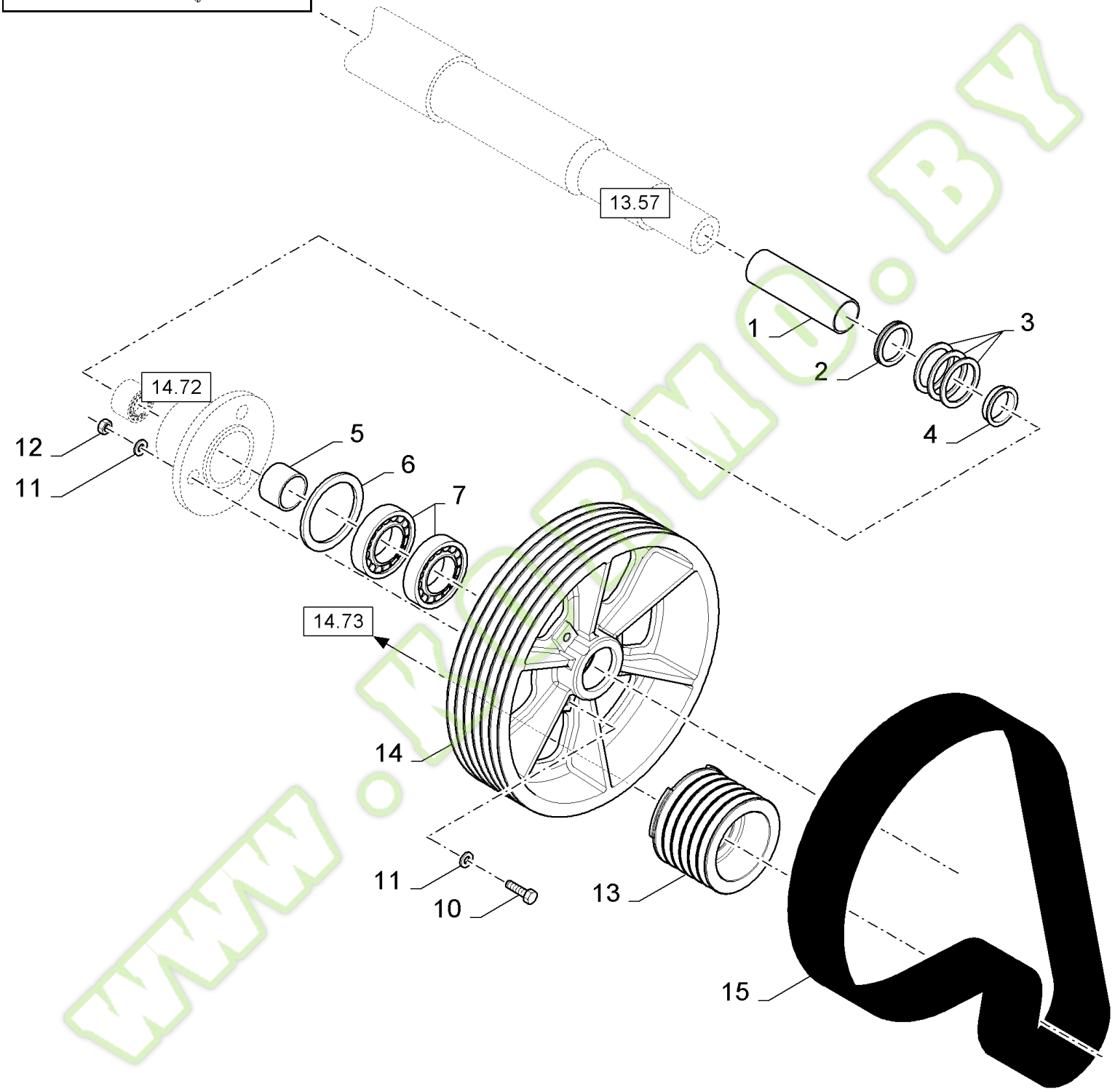

www.BORMO.BY

FX50 SELF-PROPELLED FORAGE HARVESTER (10/02-)

14.71(01) CROP PRO PLUS TM, BELT DRIVE, BELT AND PULLEY'S - LH

Ref	Part Number	Qty	Description
1	84446250	1	BUSHING,
2	84068419	1	RING,
3	84068394	AR	SHIM,
4	84077930	1	RING,
5	84015773	1	SPACER,
6	370018	1	RING, SNAP, {PP:80370018}
7	84438926	2	BEARING, BALL,
8	84448759	1	BELT,
9	84448438	1	PULLEY,
10	100016	3	NUT, {PP:80100016} M10, Cl 8, M10
11	140045	6	WASHER, LOCK, {PP:80140045} Belleville, M10, 10MM
12	120068	3	SCREW, {PP:80120068} Hex, M10 x 40, 8.8, Full Thd, M10x40
13	84448440	1	PULLEY, DRIVEN,
14	84448438	1	PULLEY,
15	84448759	1	BELT,

www.KOBMO.BY

14.72(01) CROP PRO PLUS TM, BELT DRIVE, CLUTCH

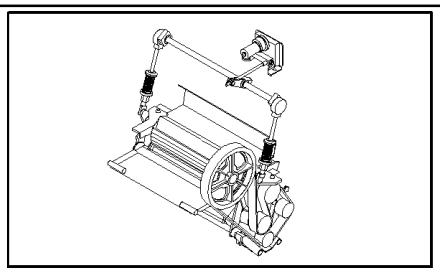

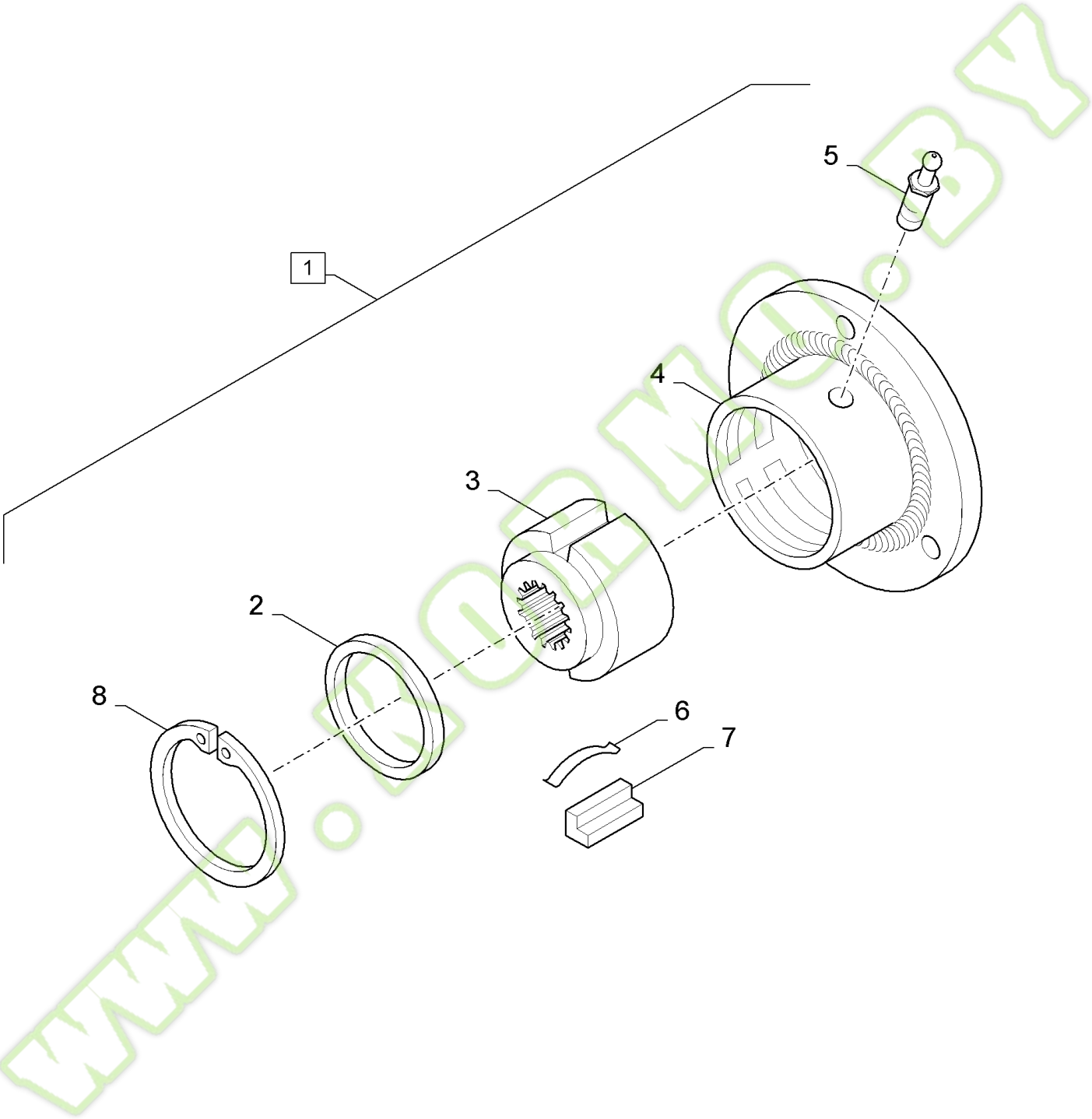

FX50 SELF-PROPELLED FORAGE HARVESTER (10/02-)

14.72(01) CROP PRO PLUS TM, BELT DRIVE, CLUTCH

Ref	Part Number	Qty	Description
1	84011945	1	CLUTCH, (2 to 8)
2	84031293	1	WASHER,
3	84031294	1	HUB,
4	84031295	1	HOUSING, (5)
5	300919	1	NIPPLE, LUBE, {PP:80300919}
6	449317	2	SPRING, {PP:80449317}
7	449316	2	KEY, {PP:80449316}
8	370018	1	RING, SNAP, {PP:80370018}

www.KOBMO.BY

14.73(01) CROP PRO PLUS TM, BELT DRIVE, ROLLS - LH

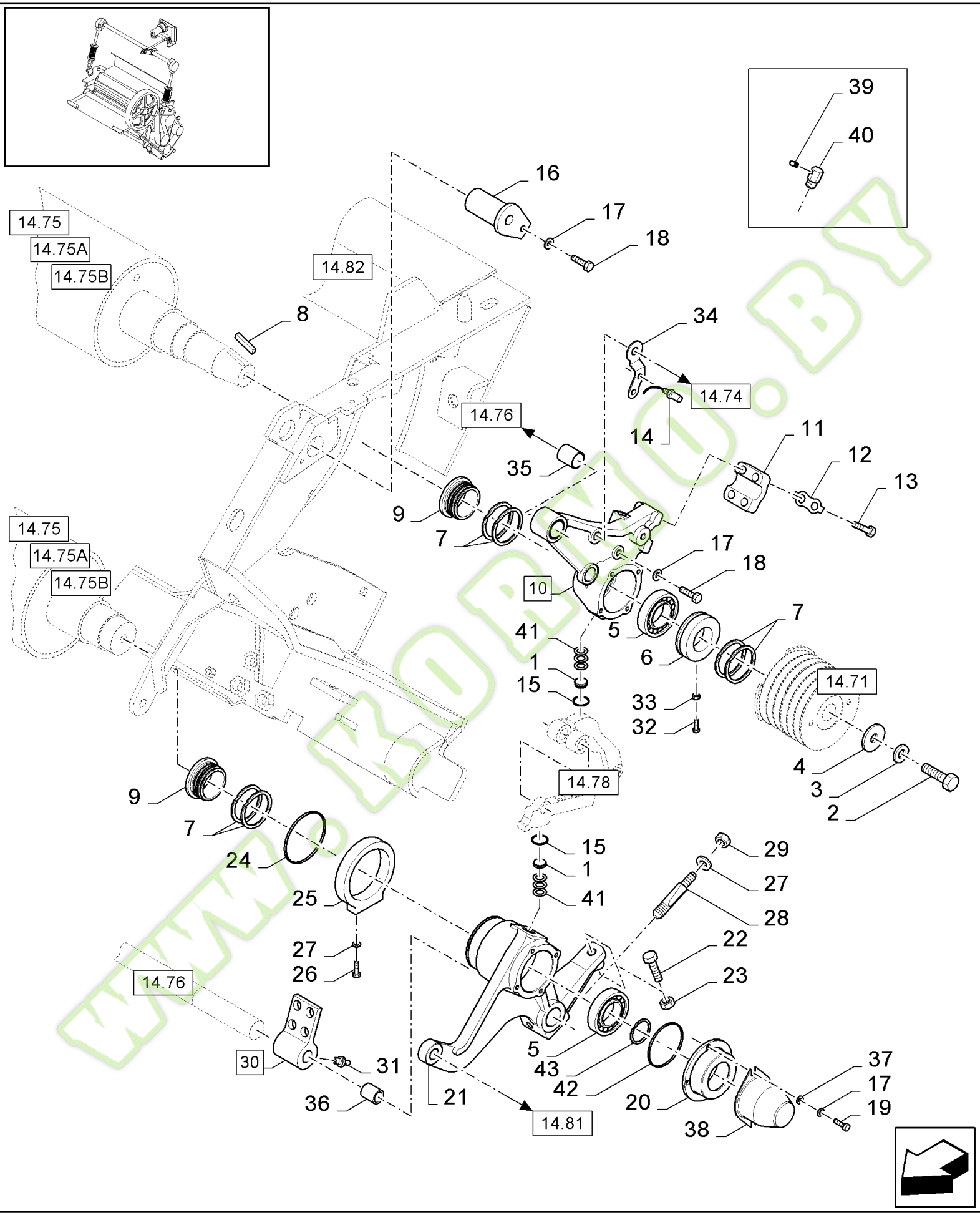

FX50 SELF-PROPELLED FORAGE HARVESTER (10/02-)

14.73(01) CROP PRO PLUS TM, BELT DRIVE, ROLLS - LH

Ref	Part Number	Qty	Description
1	84077122	2	STOP,
2	9706687	1	SCREW, {PP:89706687} Hex, M12 x 30, 8.8, M12x30
3	140046	1	WASHER, LOCK, {PP:80140046} Belleville, M12, 12MM
4	9801096	2	WASHER, {PP:89801096}
5	323327	2	BEARING ASSY, {PP:80323327}
6	84077521	1	RING,
7	89850344	3	SET OF RINGS,
8	360956	1	KEY, {PP:80360956}
9	84000853	2	FLANGE,
10	84449396	1	HOUSING, BEARING, (35)
11	84077738	1	CLAMP,
12	84431904	2	PLATE, LOCKING,
13	120068	4	SCREW, {PP:80120068} Hex, M10 x 40, 8.8, Full Thd, M10x40
14	84056907	1	SENSOR,
15	80300642	2	CIRCLIP,
16	84075366	1	PIN,
17	322358	6	WASHER, LOCK, {PP:80322358} Belleville, M8, 8MM
18	80120104	2	SCREW, M8x20
19	120103	4	SCREW, {PP:80120103} Hex, M8 x 16, 8.8, M8x16
20	84452026	1	COVER,
21	84334814	1	HOUSING, BEARING,
22	394674	1	BOLT, {PP:80394674} Hex, M16 x 80, 8.8, Full Thd, Hex, M16 x 80, 8.8, Full Thd
23	100020	1	NUT, {PP:80100020} M16, Cl 8, M16, Cl 8
24	370010	1	CIRCLIP, {PP:80370010}
25	84075050	1	BUSHING,
26	43139	2	SCREW, {PP:80043139} Hex, M10 x 25, 8.8, Full Thd, M10x25
27	140045	3	WASHER, LOCK, {PP:80140045} Belleville, M10, 10MM
28	84989980	1	STUD,
29	100016	1	NUT, {PP:80100016} M10, Cl 8, M10
30	84334121	1	HOUSING, BEARING, (36)
31	321204	1	NIPPLE, LUBE, {PP:80321204}
32	300479	1	SCREW, {PP:80300479} Hex Soc, M8 x 25, Cup Pt, M8x25
33	89706690	1	NUT, M8x1.25x13
34	84453113	1	SUPPORT,
35	84054389	1	SLEEVE,
36	412365	1	SLEEVE, {PP:80412365}
37	140041	2	WASHER, {PP:80140041} M8 x 28 x 3, 8MM
38	84819754	1	PLATE,
39	9838669	1	NIPPLE, LUBE, {PP:89838669}
40	84053211	1	CONNECTOR, HYD.,
41	84334884	6	SHIM,
42	80300633	1	RING, SNAP,
43	370006	1	CIRCLIP, {PP:80370006}

ELITEPROBMO.BY

14.74(01) CROP PRO PLUS TM, BELT DRIVE, TENSION ROLL - LH

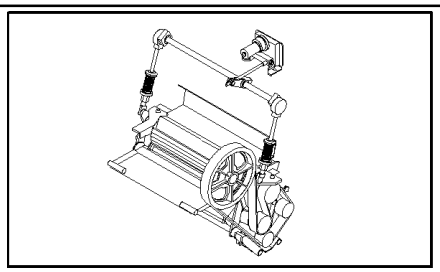

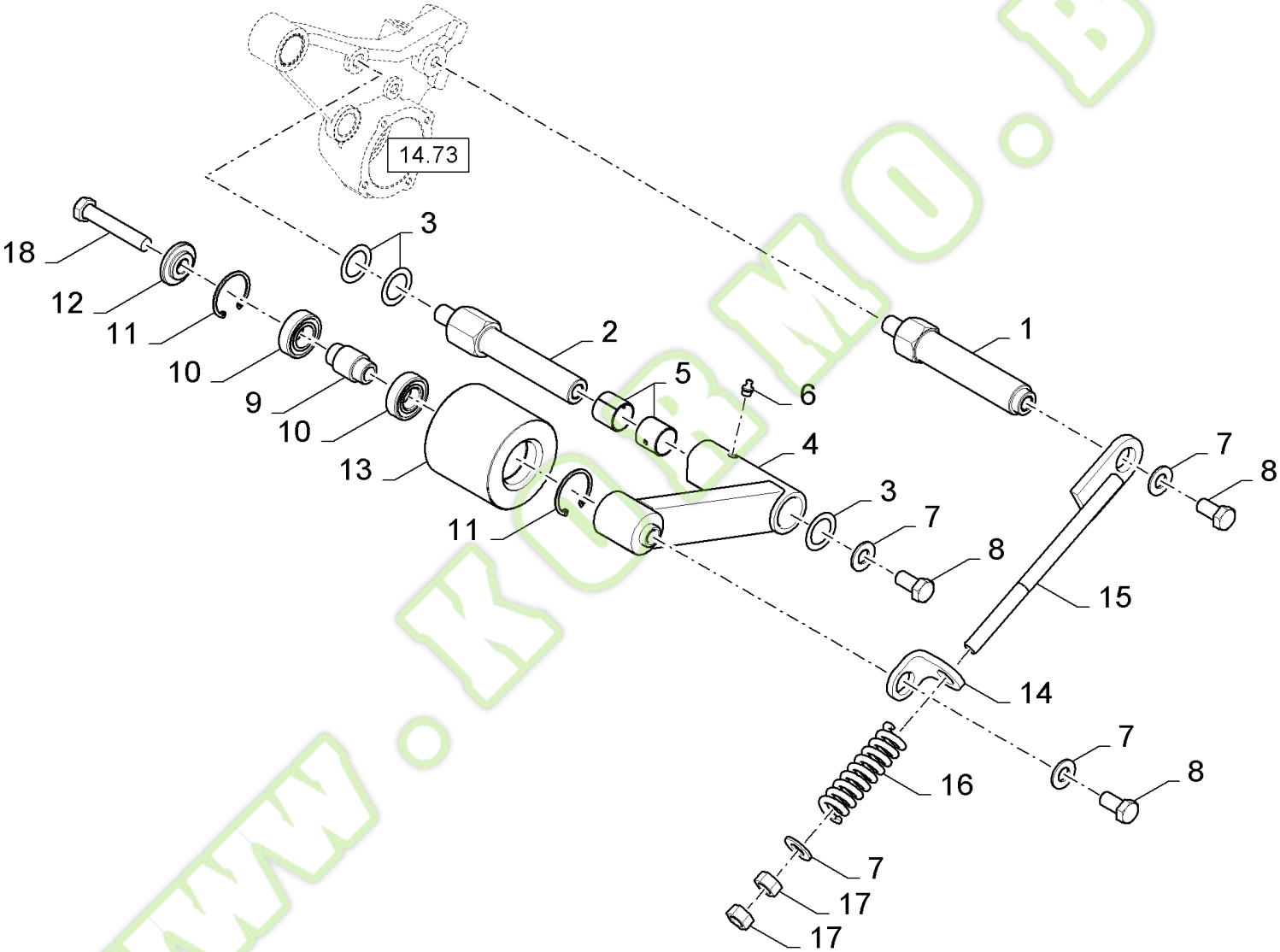

www.KOBMO.BY

FX50 SELF-PROPELLED FORAGE HARVESTER (10/02-)

14.74(01) CROP PRO PLUS TM, BELT DRIVE, TENSION ROLL - LH

Ref	Part Number	Qty	Description
1	84448772	1	SHAFT,
2	84449702	1	STUD,
3	441176	3	WASHER, {PP:80441176}
4	84449704	1	SUPPORT,
5	420410	2	BUSHING, {PP:80420410}
6	9838669	1	NIPPLE, LUBE, {PP:89838669}
7	378246	4	WASHER, {PP:80378246} 16MM
8	43167	3	BOLT, {PP:80043167} Hex, M16 x 30, 8.8, Full Thd, Hex, M16 x 30, 8.8, Full Thd
9	84069869	1	SPACER,
10	443898	2	BEARING ASSY, {PP:80443898}
11	370011	2	CIRCLIP, {PP:80370011}
12	84453127	1	WASHER,
13	84449786	1	TENSIONER,
14	84448770	1	SUPPORT,
15	84448774	1	ROD, , BSN C322
15	84455603	1	ROD, , ASN D323
16	445013	1	SPRING, {PP:80445013} , BSN C322
16	84818112	1	SPRING, , ASN D323
17	100020	2	NUT, {PP:80100020} M16, Cl 8, M16, Cl 8
18	350616	1	SCREW, {PP:80350616} Hex, M16 x 90, 8.8, M16x90

www.KOBMO.BY

14.75(01) CROP PRO PLUS TM, BELT DRIVE, ROLLS - 99T - C357

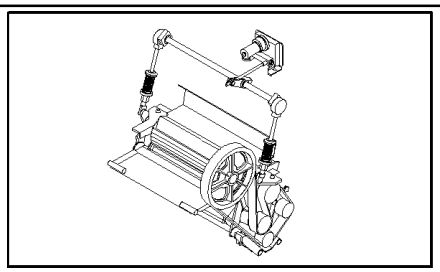

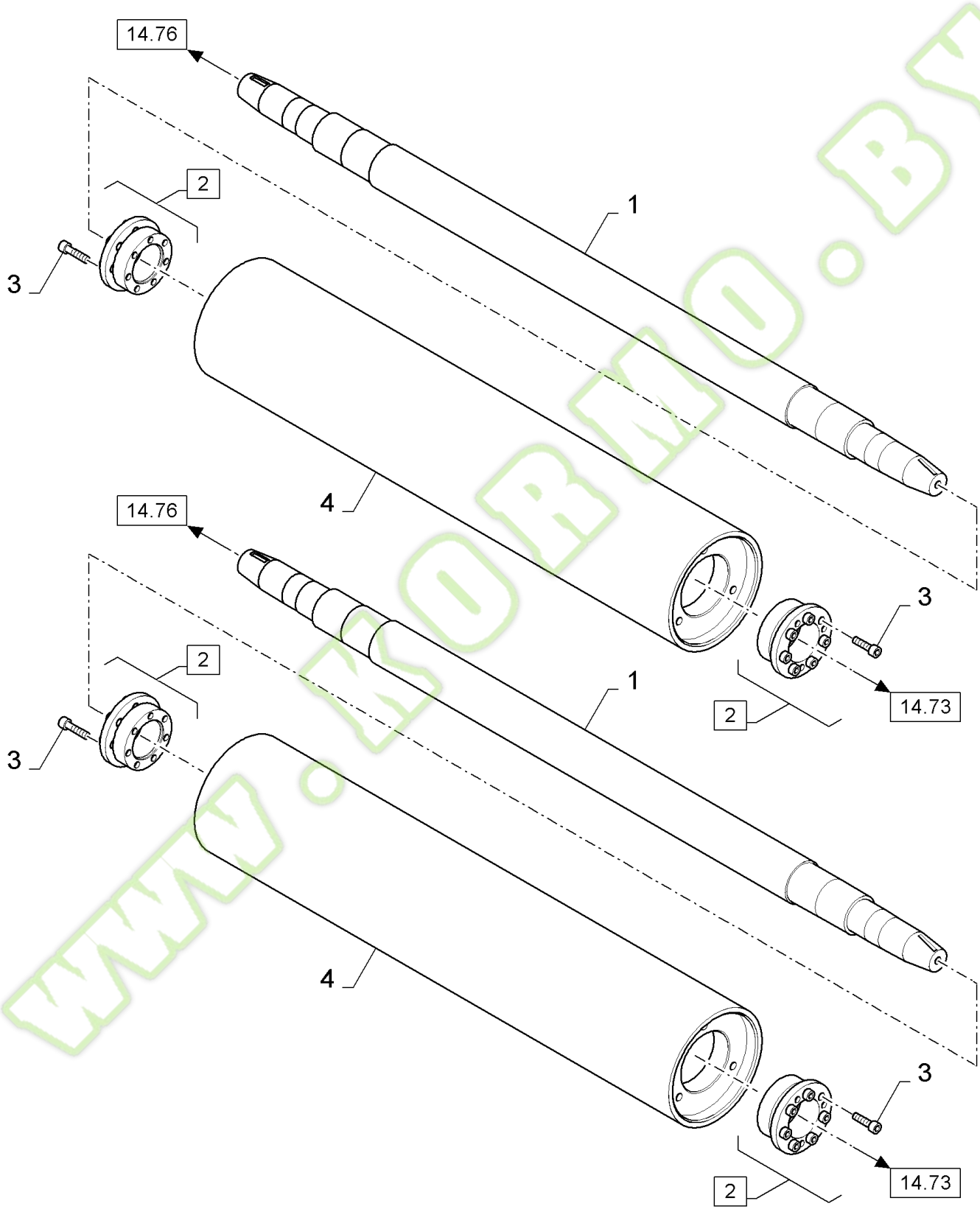

www.KOBMO.BY

FX50 SELF-PROPELLED FORAGE HARVESTER (10/02-)

14.75(01) CROP PRO PLUS TM, BELT DRIVE, ROLLS - 99T - C357

Ref	Part Number	Qty	Description
1	84074960	2	SHAFT, , BSN C281
1	84814388	1	SHAFT, , ASN D282
2	84818644	4	CLAMP, COLLAR, (3)
3	84432127	AR	SCREW, Hex Soc Hd, M6 x 25, 12.9, M8x25
4	84074961	2	ROLLER,

www.KOBMO.BY

14.75A(01) CROP PRO PLUS TM, BELT DRIVE, ROLLS - 77T - C357

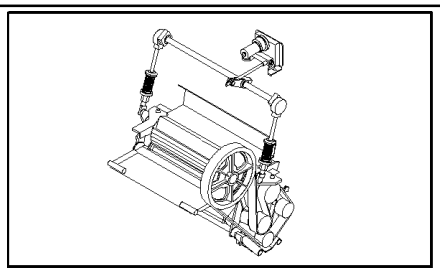

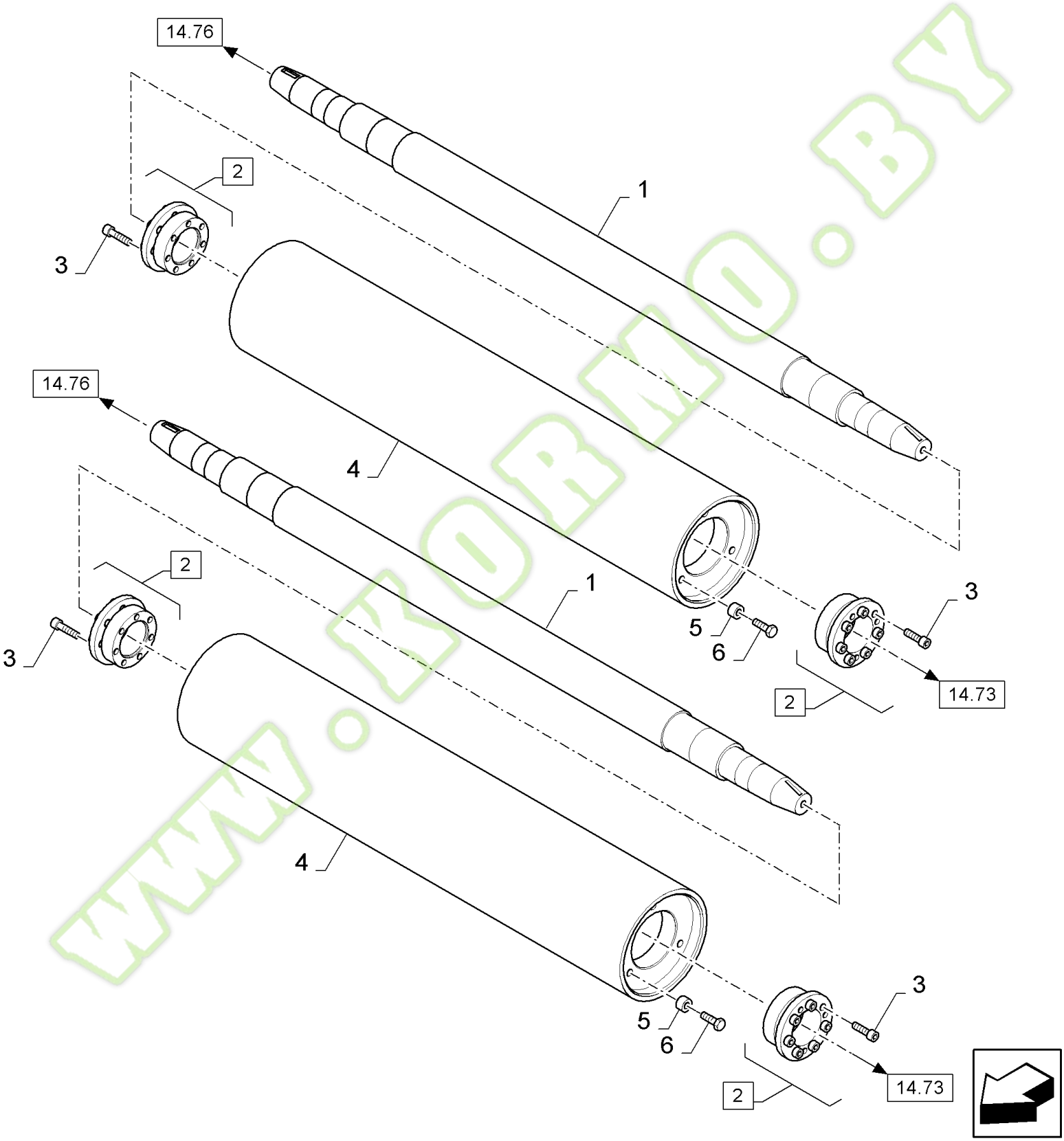

www.KOBMO.BY

FX50 SELF-PROPELLED FORAGE HARVESTER (10/02-)

14.75A(01) CROP PRO PLUS TM, BELT DRIVE, ROLLS - 77T - C357

Ref	Part Number	Qty	Description
1	84074960	2	SHAFT, , BSN C281
1	84814388	2	SHAFT, , ASN D282
2	84818644	4	CLAMP, COLLAR, (3)
3	84432127	AR	SCREW, Hex Soc Hd, M6 x 25, 12.9, M8x25
4	84073406	2	ROLLER,
5	84056580	6	BUSHING,
6	300388	6	SCREW, {PP:80300388} Hex, M12 x 25, 8.8, M12x25

www.KOBMO.BY

FX50 SELF-PROPELLED FORAGE HARVESTER (10/02-)

14.75B(01) CROP PRO PLUS TM, BELT DRIVE, ROLLS - 132T - C357

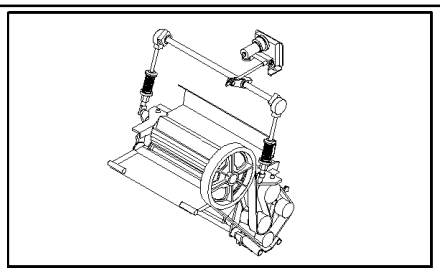

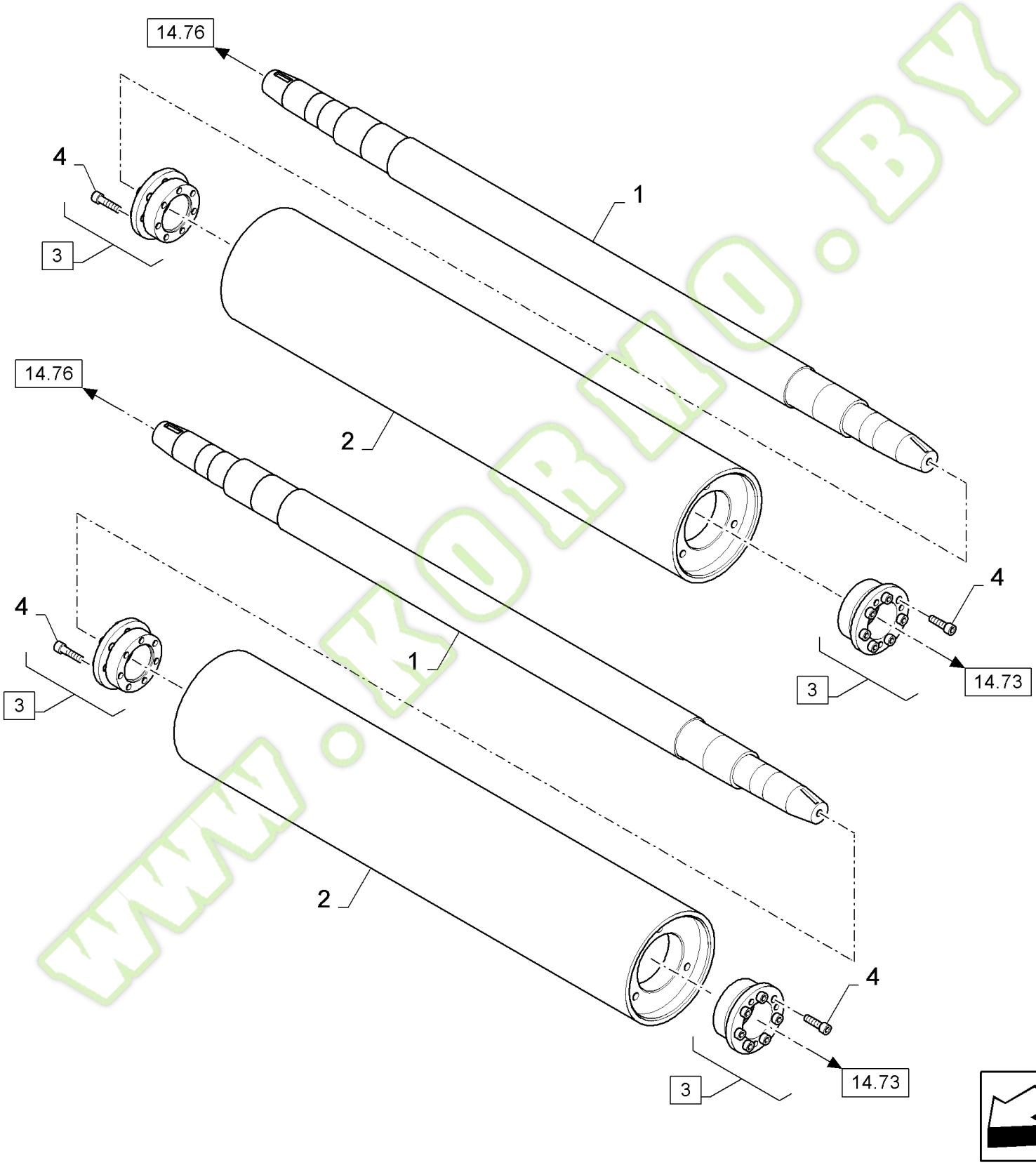

www.KOBMO.BY

FX50 SELF-PROPELLED FORAGE HARVESTER (10/02-)

14.75B(01) CROP PRO PLUS TM, BELT DRIVE, ROLLS - 132T - C357

Ref	Part Number	Qty	Description
1	84814388	2	SHAFT,
2	84441140	2	ROLLER, Sawtooth
3	84818644	4	CLAMP, COLLAR, (4)
4	84432127	AR	SCREW, Hex Soc Hd, M6 x 25, 12.9, M8x25

www.KOBMO.BY

14.75C(01) CROP PRO PLUS TM, BELT DRIVE, ROLLS - 77T/99T/132T - D358

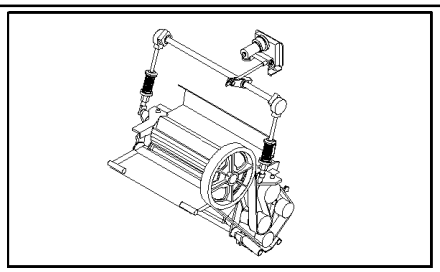

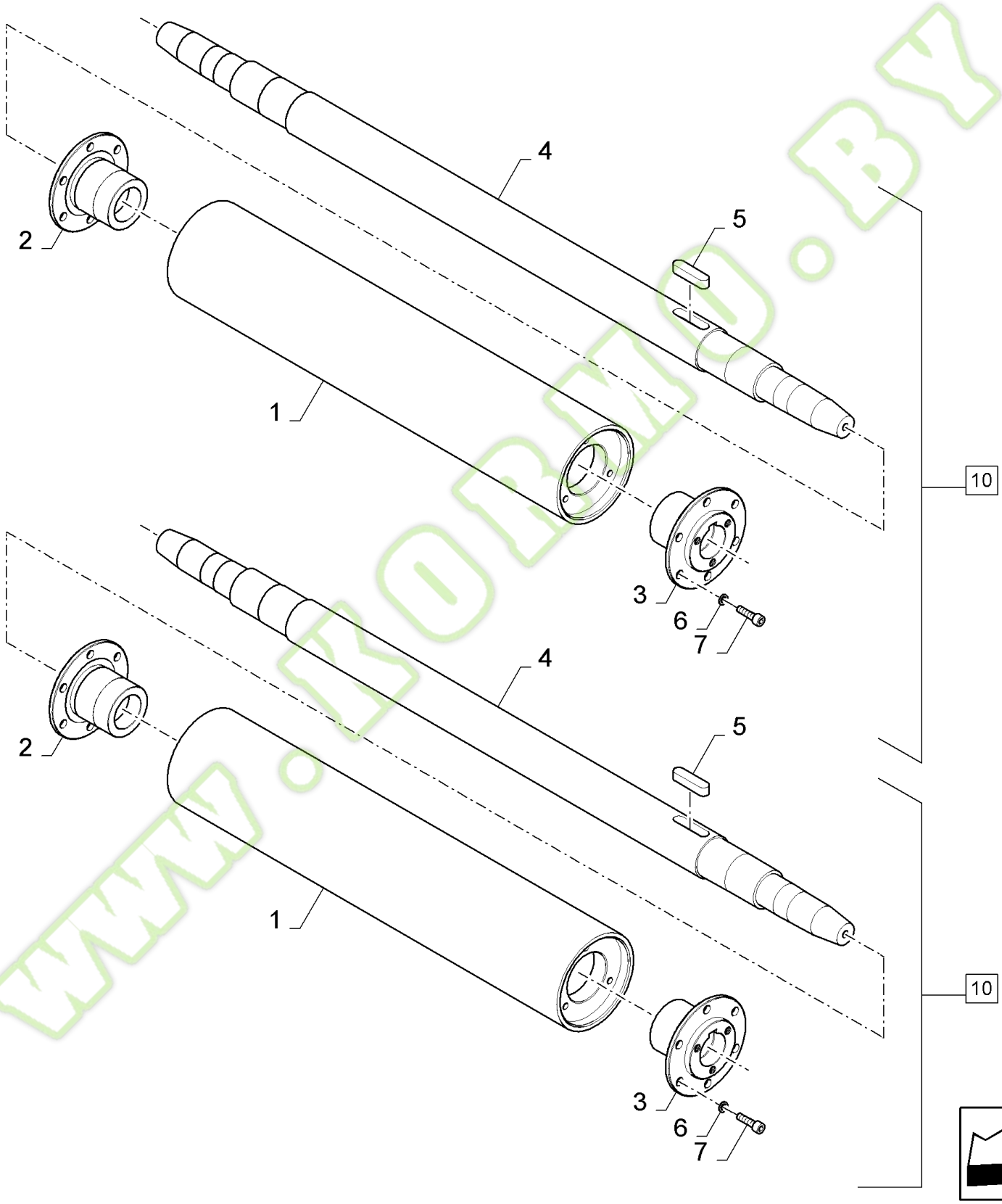

www.KOBMO.BY

FX50 SELF-PROPELLED FORAGE HARVESTER (10/02-)

14.75C(01) CROP PRO PLUS TM, BELT DRIVE, ROLLS - 77T/99T/132T - D358

Ref	Part Number	Qty	Description
1	84073406	2	ROLLER, , 77 SERRATIONS
1	84074961	2	ROLLER, , 99 SERRATIONS
1	84441140	2	ROLLER, Sawtooth, 132 SERRATIONS
2	84455018	2	FLANGE,
3	84455019	2	FLANGE,
4	84455001	2	SHAFT,
5	84455017	2	KEY,
6	362298	24	WASHER, {PP:80362298} 12MM
7	300388	24	SCREW, {PP:80300388} Hex, M12 x 25, 8.8, M12x25
10	84457955	2	ROLLER, , 77 SERRATIONS
10	84455049	2	ROLLER, , 99 SERRATIONS
10	84457956	2	ROLLER, , 132 SERRATIONS

www.KOBMO.BY

14.76(01) CROP PRO PLUS TM, BELT DRIVE, ROLLS - RH

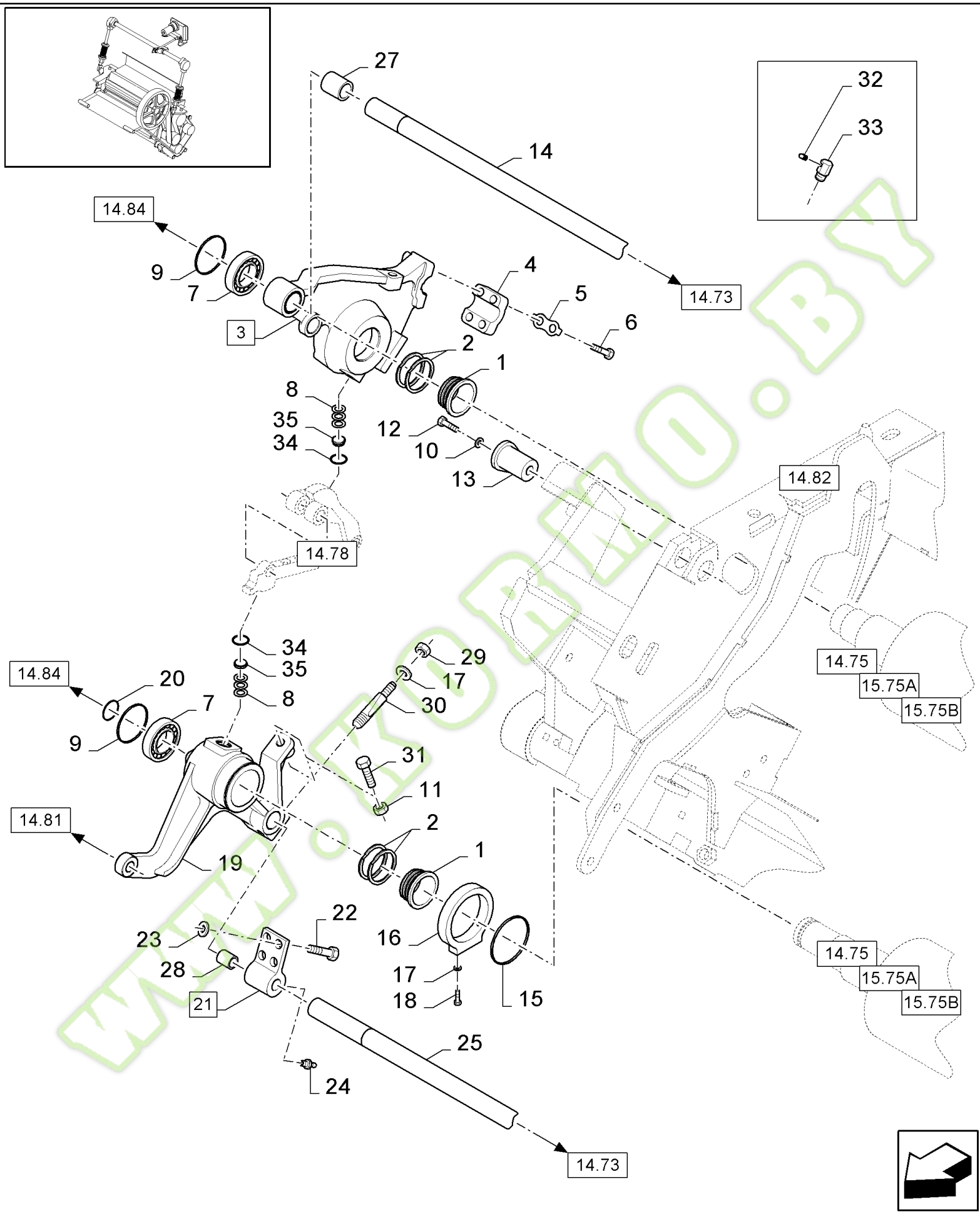

FX50 SELF-PROPELLED FORAGE HARVESTER (10/02-)

14.76(01) CROP PRO PLUS TM, BELT DRIVE, ROLLS - RH

Ref	Part Number	Qty	Description
1	84000853	2	FLANGE,
2	89850344	2	SET OF RINGS,
3	84334899	1	HOUSING, BEARING, (27)
4	84077738	1	CLAMP,
5	84431904	2	PLATE, LOCKING,
6	120068	4	SCREW, {PP:80120068} Hex, M10 x 40, 8.8, Full Thd, M10x40
7	323327	2	BEARING ASSY, {PP:80323327}
8	84334884	6	SHIM,
9	80300633	2	RING, SNAP,
10	322358	1	WASHER, LOCK, {PP:80322358} Belleville, M8, 8MM
11	100020	1	NUT, {PP:80100020} M16, Cl 8, M16, Cl 8
12	80120104	1	SCREW, M8x20
13	84075366	1	PIN,
14	84433209	1	SHAFT,
15	370010	1	CIRCLIP, {PP:80370010}
16	84075050	1	BUSHING, 10MM
17	140045	3	WASHER, LOCK, {PP:80140045} Belleville, M10,
18	43139	2	SCREW, {PP:80043139} Hex, M10 x 25, 8.8, Full Thd, M10x25
19	84334860	1	HOUSING, BEARING,
20	370006	1	CIRCLIP, {PP:80370006}
21	84989500	1	HOUSING, BEARING, (28)
22	120090	3	SCREW, {PP:80120090} Hex, M16 x 50, 8.8, Hex, M16 x 50, 8.8
23	140048	3	WASHER, LOCK, {PP:80140048} Belleville, M16, 16MM
24	321204	1	NIPPLE, LUBE, {PP:80321204}
25	84433211	1	SHAFT,
26	84432411	1	CAM,
27	84054389	1	SLEEVE,
28	412365	1	SLEEVE, {PP:80412365}
29	100016	1	NUT, {PP:80100016} M10, Cl 8, M10
30	84989980	1	STUD,
31	394674	1	BOLT, {PP:80394674} Hex, M16 x 80, 8.8, Full Thd, Hex, M16 x 80, 8.8, Full Thd
32	9838669	2	NIPPLE, LUBE, {PP:89838669}
33	84053211	2	CONNECTOR, HYD.,
34	80300642	2	CIRCLIP,
35	84077122	2	STOP,

www.RORMO.BY

14.77(01) CROP PRO PLUS TM, BELT DRIVE, ROLL ADJUSTMENT - UPPER

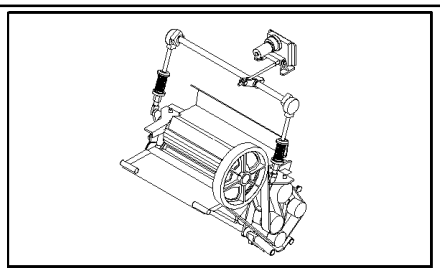

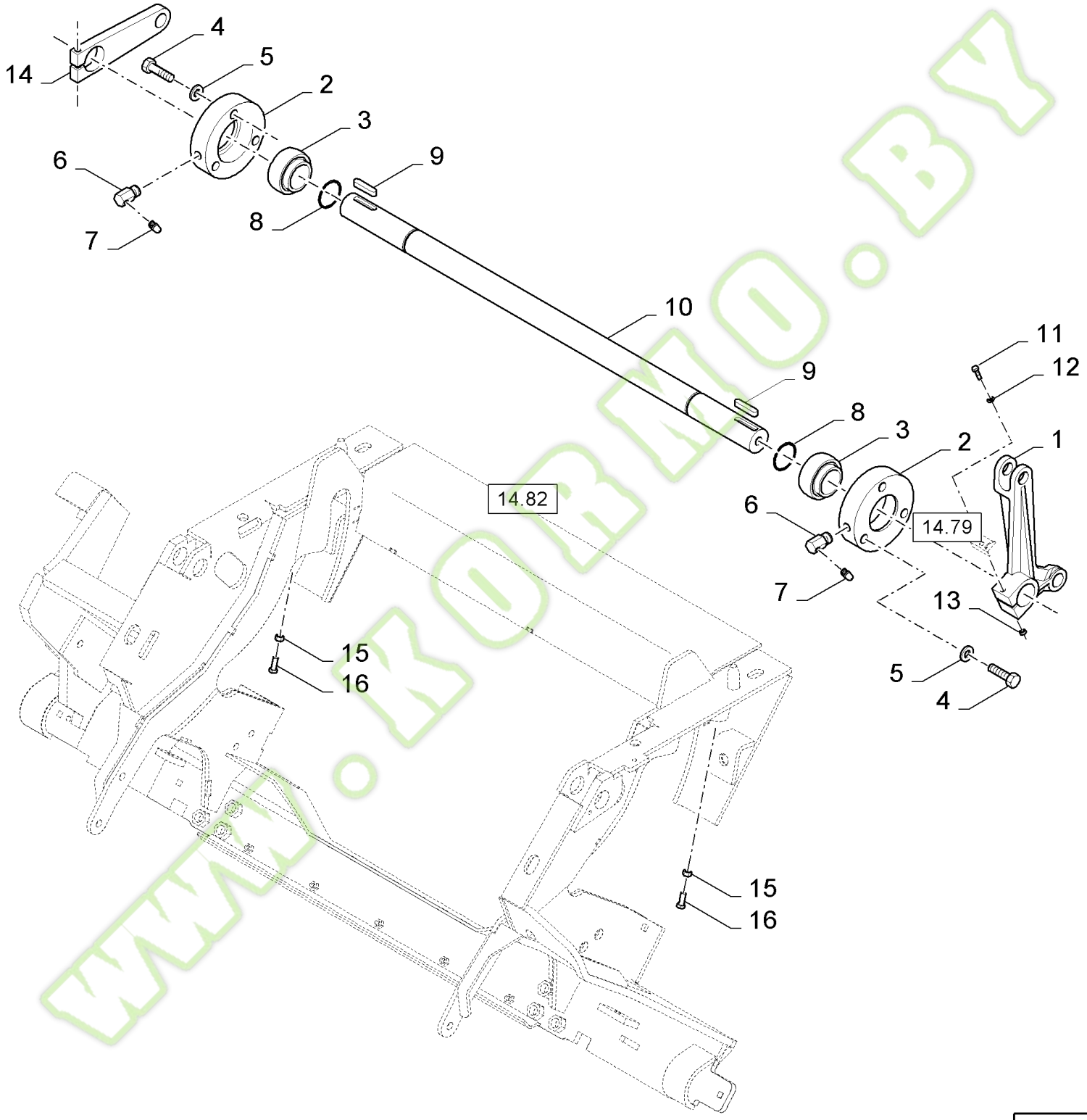

www.KOBMO.BY

FX50 SELF-PROPELLED FORAGE HARVESTER (10/02-)

14.77(01) CROP PRO PLUS TM, BELT DRIVE, ROLL ADJUSTMENT - UPPER

Ref	Part Number	Qty	Description
1	84334827	1	LINK, LIFT,
2	84334577	2	HOUSING, BEARING,
3	84334566	2	BEARING ASSY,
4	325829	6	SCREW, {PP:80325829} Hex, M10 x 45, 8.8, M10x45
5	140045	6	WASHER, LOCK, {PP:80140045} Belleville, M10, 10MM
6	84053211	2	CONNECTOR, HYD.,
7	9838669	2	NIPPLE, LUBE, {PP:89838669}
8	370004	2	CIRCLIP, {PP:80370004}
9	354775	2	KEY, {PP:80354775}
10	84433210	1	SHAFT,
12	140045	2	WASHER, LOCK, {PP:80140045} Belleville, M10, 10MM
13	100016	2	NUT, {PP:80100016} M10, Cl 8, M10
14	84334817	1	LINK, LIFT,
15	100020	2	NUT, {PP:80100020} M16, Cl 8, M16, Cl 8
16	43168	2	SCREW, {PP:80043168} Hex, M16 x 40, 8.8, Hex, M16 x 40, 8.8
11	43144	2	SCREW, {PP:80043144} Hex, M10 x 70, 8.8, M10x70

www.KOBMO.BY

14.78(01) CROP PRO PLUS TM, BELT DRIVE, ROLL ADJUSTMENT - LOWER

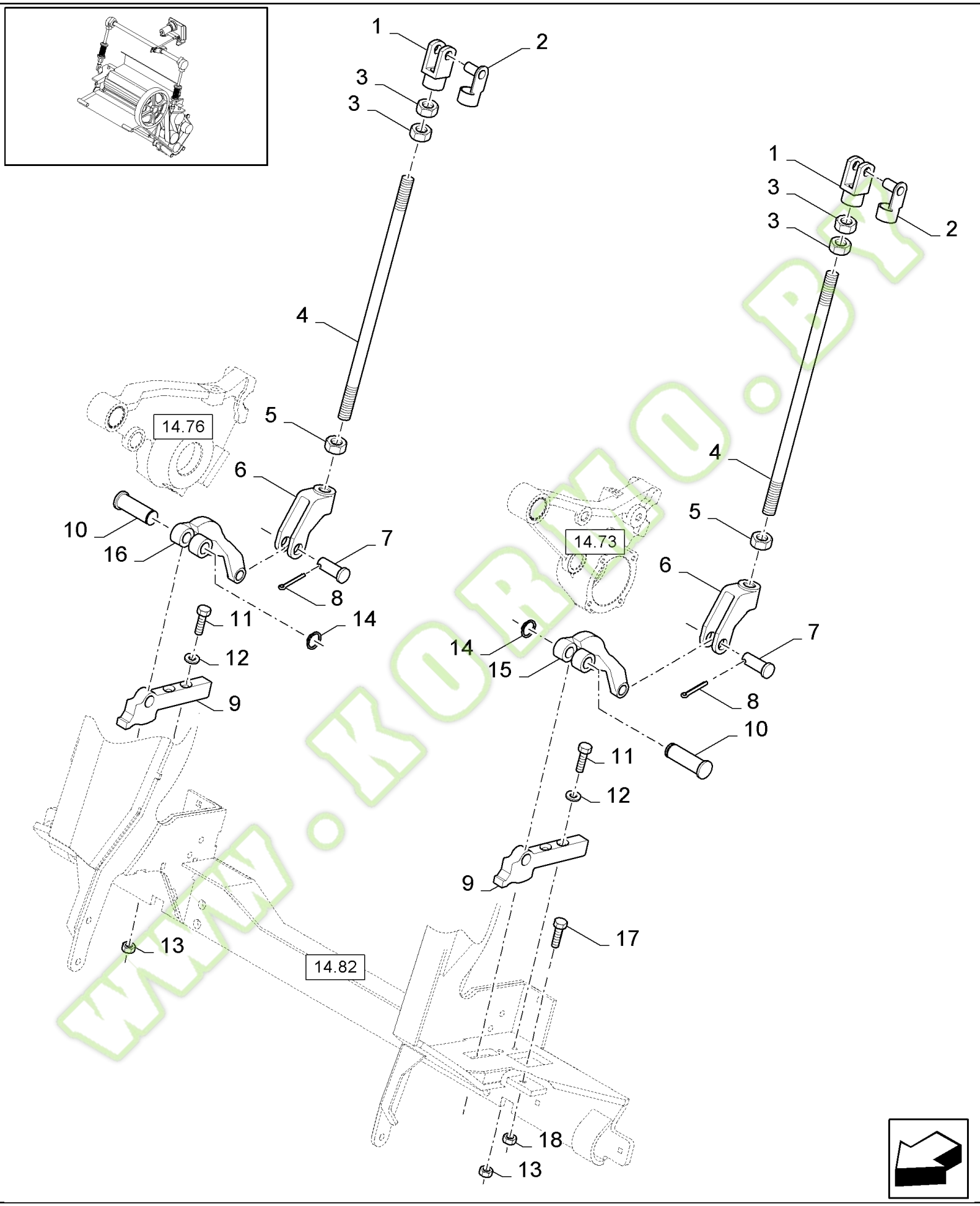

www.KOBMO.BY

FX50 SELF-PROPELLED FORAGE HARVESTER (10/02-)

14.78(01) CROP PRO PLUS TM, BELT DRIVE, ROLL ADJUSTMENT - LOWER

Ref	Part Number	Qty	Description
1	9811840	2	CLEVIS, {PP:89811840}
2	84078959	2	CLEVIS,
3	100020	4	NUT, {PP:80100020} M16, Cl 8, M16, Cl 8
4	84448093	2	STUD,
5	84011539	2	NUT, Thin, M20 x 1.5, Cl 05, LH, M16
6	84448095	2	YOKE,
7	390089	2	SPINDLE, {PP:80390089}
8	130007	2	PIN, SPLIT (COTTER), {PP:80130007} M4 x 25,
9	84440700	2	CAM,
10	84073494	2	PIN,
11	84041534	4	SCREW, Hex Soc Flat Hd, M10 x 55, 8.8, M10x55
12	140045	4	WASHER, LOCK, {PP:80140045} Belleville, M10, 10MM
13	100016	4	NUT, {PP:80100016} M10, Cl 8, M10
14	300627	2	RING, SNAP, {PP:80300627}
15	84432431	1	CAM,
16	84432411	1	CAM,
17	120122	2	SCREW, {PP:80120122} Hex, M12 x 50, 8.8, Full Thd, M12x50
18	89706685	2	NUT, M12

www.KOBMO.BY

14.79(01) CROP PRO PLUS TM, BELT DRIVE, ELECTRICAL CONTROL

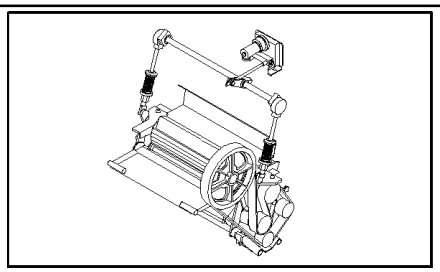

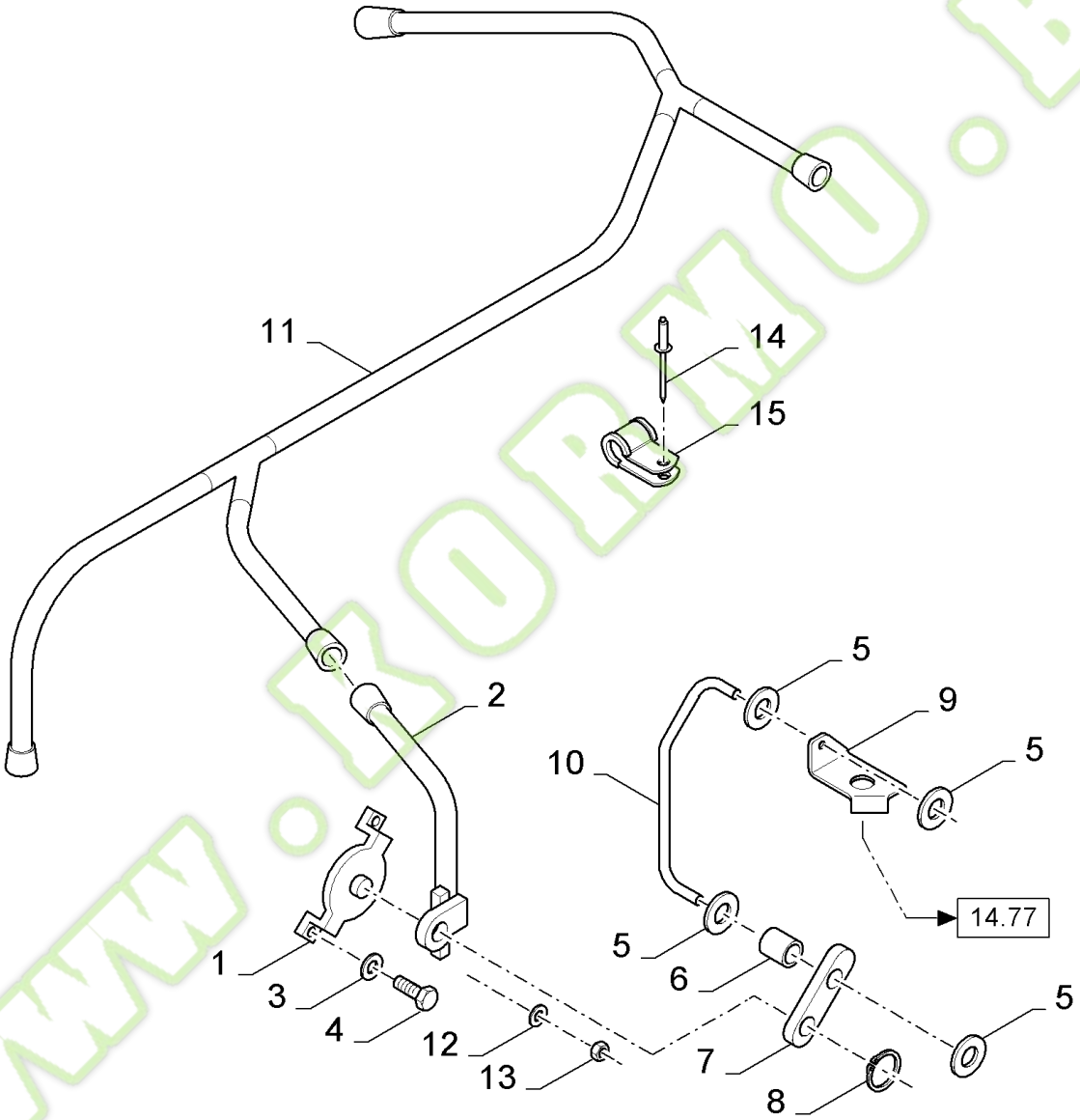

www.KORMO.BY

FX50 SELF-PROPELLED FORAGE HARVESTER (10/02-)

14.79(01) CROP PRO PLUS TM, BELT DRIVE, ELECTRICAL CONTROL

Ref	Part Number	Qty	Description
1	E6NNT936AA	1	BRACKET, {PP:83981890}
2	9594791	1	SENSOR, {PP:89594791}
3	140045	2	WASHER, LOCK, {PP:80140045} Belleville, M10, 10MM
4	43138	2	SCREW, {PP:80043138} Hex, M10 x 20, 8.8, Full Thd, M10x20
5	398561	4	CLIP, {PP:80398561}
6	E6NNT934AA	1	BUSHING, {PP:83981915}
7	E6NNT933AA	1	LEVER, {PP:83981913}
8	N663107S36	1	CIRCLIP, {PP:83981963}
9	84432815	1	SUPPORT,
10	84433191	1	ROD,
11	84432383	1	HARNESS, WIRE,
12	322355	1	WASHER, LOCK, {PP:80322355} Belleville, M4, 4MM
13	100012	1	NUT, {PP:80100012} M4, Cl 8, M4
14	NS	1	NOT SERVICED, Rivet
15	84818442	1	CLAMP,

www.KOBMO.BY

14.80(001) CROP PRO PLUS TM, BELT DRIVE, ELECTRICAL CONTROL ENGINE

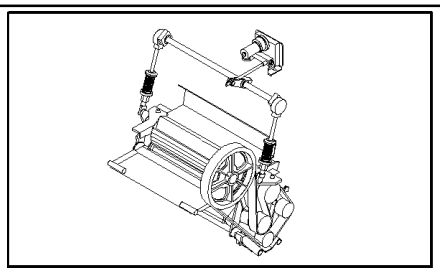

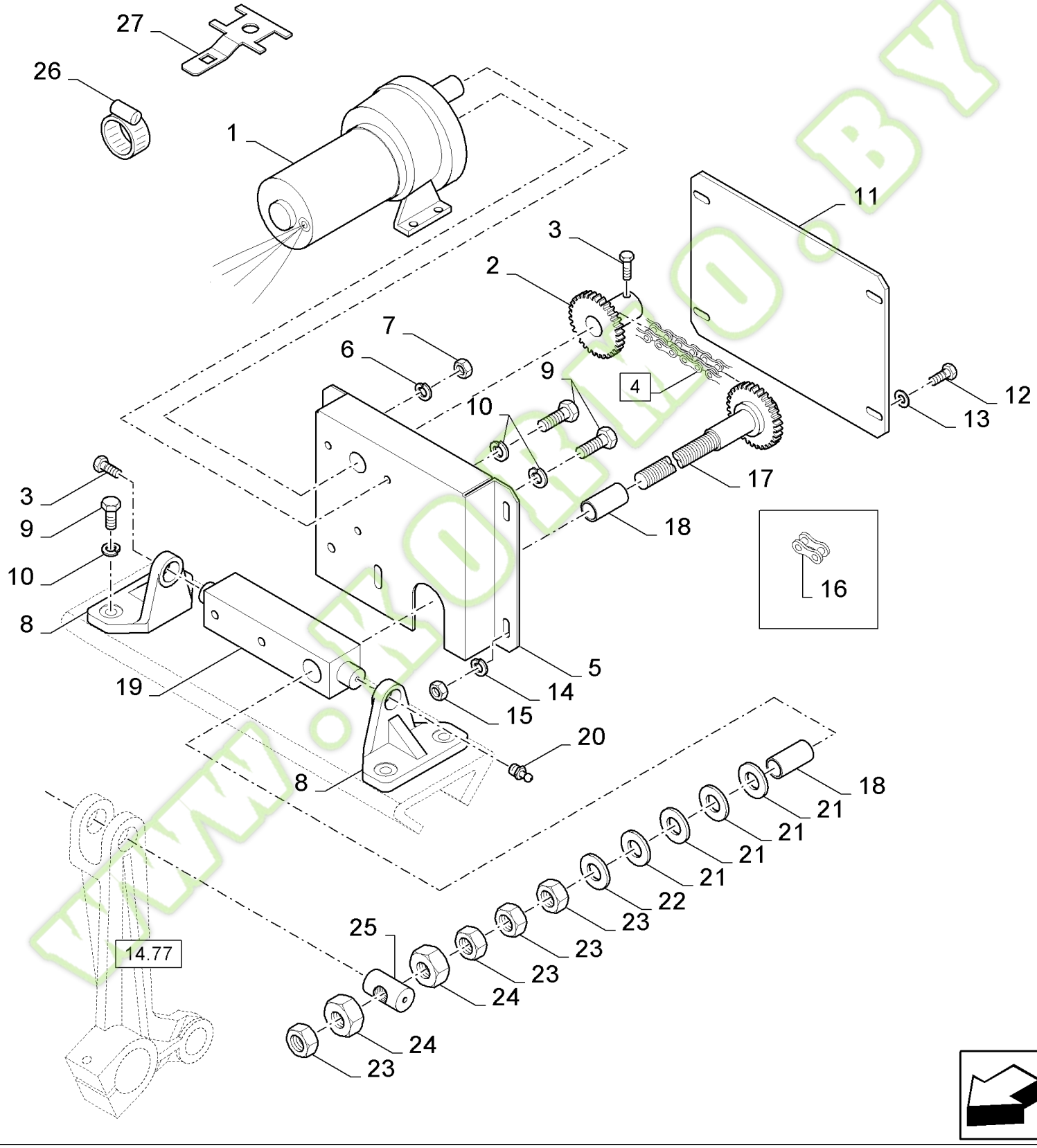

FX50 SELF-PROPELLED FORAGE HARVESTER (10/02-)

14.80(001) CROP PRO PLUS TM, BELT DRIVE, ELECTRICAL CONTROL ENGINE

Ref	Part Number	Qty	Description
1	84019727	1	MOTOR, ELECTRIC, SMALL,
2	84017037	1	SPROCKET, DRIVEN,
3	84012755	2	SCREW, Hex Soc, M6 x 5, M6x5
4	84036397	1	CHAIN, (16)
5	84036403	1	SUPPORT,
6	322357	2	WASHER, LOCK, {PP:80322357} Belleville, M6, Belleville, M6
7	88542	2	SCREW, {PP:80088542} Hex, 1/4"-20 x 1/2", G5, Full Thd, .25"x50"
8	84036413	2	HOUSING, BEARING,
9	43139	6	SCREW, {PP:80043139} Hex, M10 x 25, 8.8, Full Thd, M10x25
10	140045	6	WASHER, LOCK, {PP:80140045} Belleville, M10, 10MM
11	84036401	1	PLATE,
12	120103	4	SCREW, {PP:80120103} Hex, M8 x 16, 8.8, M8x16
13	378243	4	WASHER, {PP:80378243}
14	322358	4	WASHER, LOCK, {PP:80322358} Belleville, M8, 8MM
15	89706690	4	NUT, M8x1.25x13.0
16	25195	1	LINK, CONNECTING, {PP:80025195}
17	84054410	1	ROD, THREADED,
18	382975	2	BUSHING, {PP:80382975}
19	84058650	1	SUPPORT,
20	9838669	1	NIPPLE, LUBE, {PP:89838669}
21	168100	4	SHIM, {PP:80168100}
22	378247	1	WASHER, {PP:80378247} 20MM
23	320771	4	NUT, {PP:80320771} Thin, M20 x 1.5, Cl 04, M20x1.5
24	84036420	2	NUT, M20x1.5
25	84056346	1	PIN,
26	381145	1	CLAMP, {PP:80381145}
27	84032700	1	SUPPORT,

www.KORMO.BY

14.81(01) CROP PRO PLUS TM, BELT DRIVE, MAIZE/GRASS

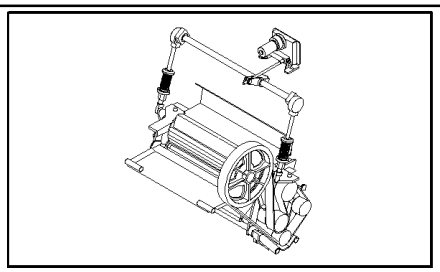

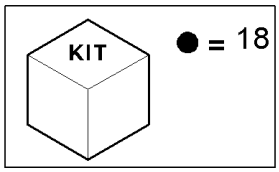

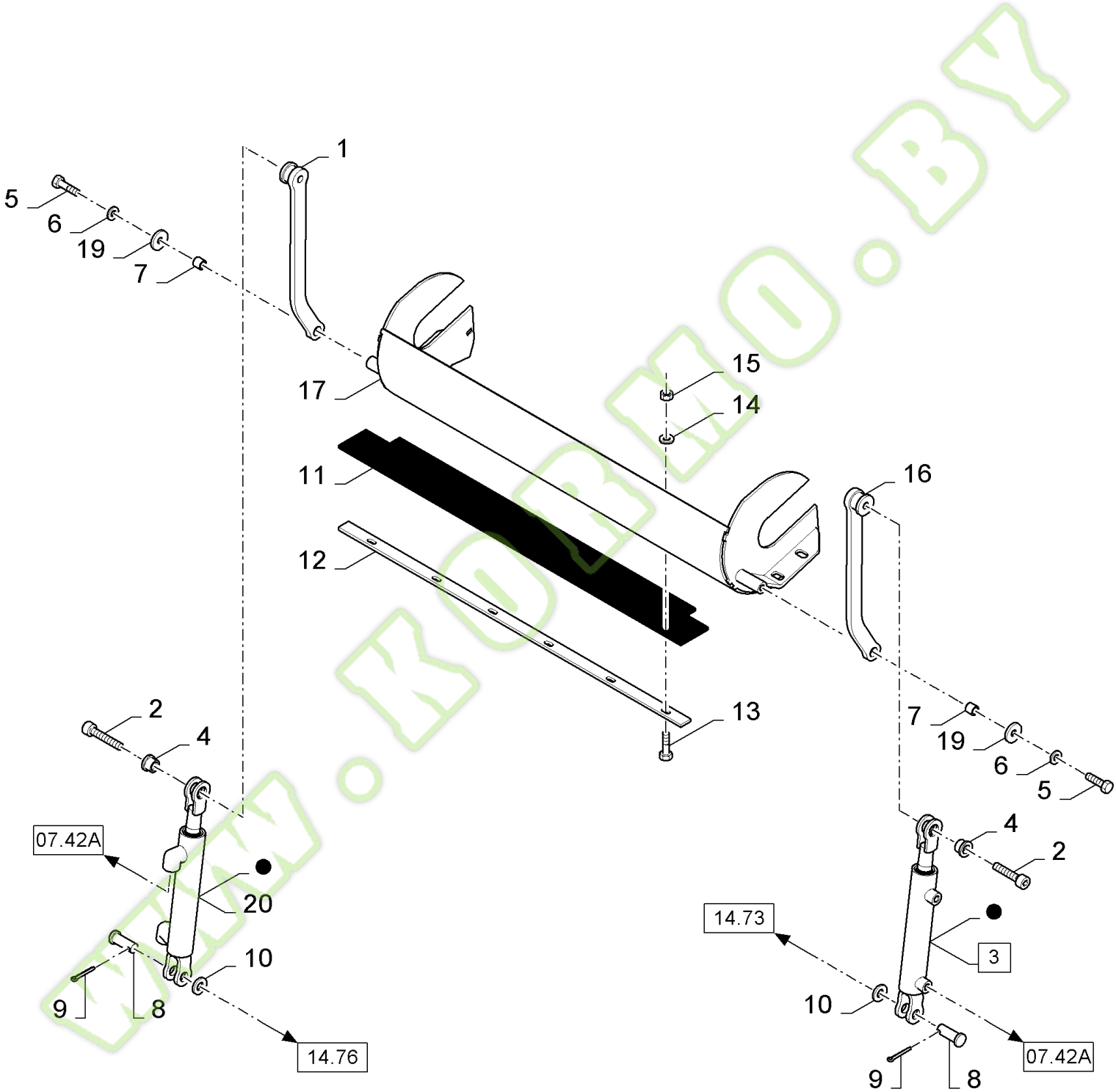

WWW.KOBMO.BY

FX50 SELF-PROPELLED FORAGE HARVESTER (10/02-)

14.81(01) CROP PRO PLUS TM, BELT DRIVE, MAIZE/GRASS

Ref	Part Number	Qty	Description
1	84432540	1	LINK/SHACKLE,
2	280685	2	SCREW, {PP:80280685} Hex Soc Hd, M12 x 40, 12.9, M12x40
3	84448286	1	HYDRAULIC CYLINDER, (18), BSN C333
3	84455840	1	HYDRAULIC CYLINDER, (18), ASN D334
4	84433199	2	BUSHING,
5	43140	2	BOLT, {PP:80043140} Hex, M10 x 30, 8.8, M10x30
6	378244	2	WASHER, LOCK, {PP:80378244} 10MM
7	84433200	2	BUSHING,
8	80412131	2	PIN, LOCK,
9	412686	2	PIN, SPLIT (COTTER), {PP:80412686} M5 x 32,
10	378247	2	WASHER, {PP:80378247} 20MM
11	84073770	1	CANVAS,
12	84432543	1	PLATE,
13	308761	6	SCREW, {PP:80308761} Short NK, M8 x 25, Cl8.8, Full Thd, M8x25
14	322358	6	WASHER, LOCK, {PP:80322358} Belleville, M8, 8MM
15	86629542	6	NUT, M8 x 1.25", Cl 8, M8
16	84432541	1	LINK/SHACKLE,
17	84448855	1	COVER,
18	84819752	2	KIT, SEALS,
19	140045	2	WASHER, LOCK, {PP:80140045} Belleville, M10,
20	84449171	1	HYDRAULIC CYLINDER, (18), BSN C333
20	84455842	1	HYDRAULIC CYLINDER, (18), ASN D334

www.KOLMO.BY

14.82(01) CROP PRO PLUS TM, BELT DRIVE, FRAME AND GUARDS

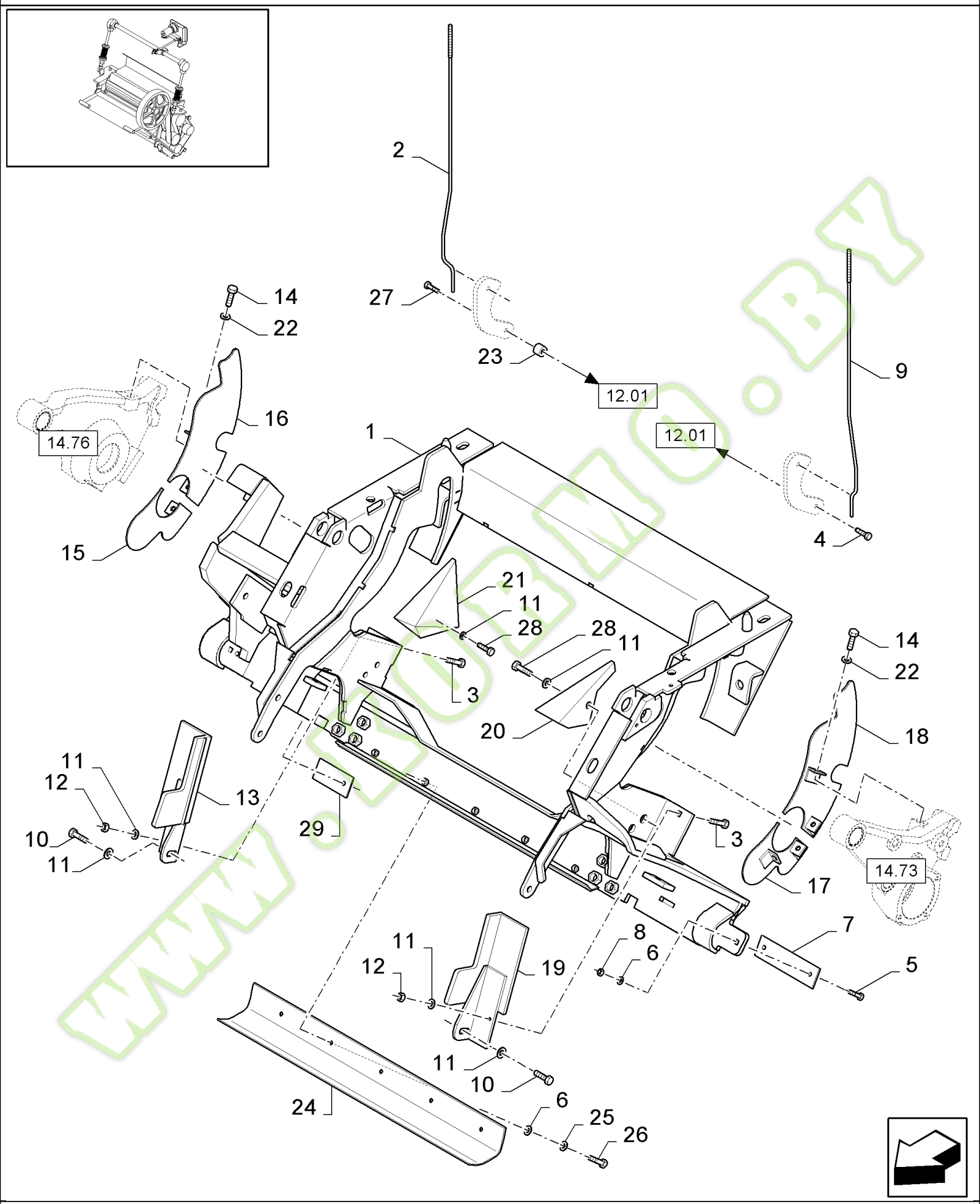

FX50 SELF-PROPELLED FORAGE HARVESTER (10/02-)

14.82(01) CROP PRO PLUS TM, BELT DRIVE, FRAME AND GUARDS

Ref	Part Number	Qty	Description
1	84452249	1	FRAME,
2	84453020	1	ROD,
3	338949	2	SCREW, {PP:80338949} Short NK, M10 x 25, Cl8.8, Full Thd,
4	86512444	1	SCREW, Short NK, M8 x 40, Cl8.8, Full Thd, M8x40
5	120038	2	BOLT, {PP:80120038} Short NK, M8 x 30, Cl8.8, Full Thd, M8x30
6	322358	7	WASHER, LOCK, {PP:80322358} Belleville, M8, 8MM
7	84432675	1	SHIM,
8	89706690	2	NUT, M8x1.25x13
9	84432715	1	ROD,
10	120068	2	SCREW, {PP:80120068} Hex, M10 x 40, 8.8, Full Thd, M10x40
11	140045	6	WASHER, LOCK, {PP:80140045} Belleville, M10, 10MM
12	100016	2	NUT, {PP:80100016} M10, Cl 8, M10
13	84073236	1	PLATE, COVER,
14	80120104	4	SCREW, M8x20
15	84073473	1	PLATE, COVER,
16	84073467	1	PLATE, COVER,
17	84073441	1	PLATE, COVER,
18	84073427	1	PLATE, COVER,
19	84073227	1	PLATE, COVER,
20	84001328	1	PLATE, SKID,
21	84001329	1	PLATE, SKID,
22	412650	4	WASHER, LOCK, {PP:80412650} Belleville, M8,
23	84453132	1	BUSHING,
24	84448879	1	PLATE,
25	378243	5	WASHER, {PP:80378243} 8MM
26	43127	5	BOLT, {PP:80043127} Hex, M8 x 25, 8.8, M8x25
27	300510	1	SCREW, {PP:80300510} Hex, M8 x 65, 8.8, M8x65, NOT FOR WHOLE CROP, BSN C325
27	86512445	1	BOLT, Short NK, M8 x 60, Cl8.8, M8x60, NOT FOR WHOLE CROP, ASN D326
27	300510	1	SCREW, {PP:80300510} Hex, M8 x 65, 8.8, M8x65, WHOLE CROP, BSN C322
27	86512445	1	BOLT, Short NK, M8 x 60, Cl8.8, M8x60, WHOLE CROP, ASN D323
28	43140	2	BOLT, {PP:80043140} Hex, M10 x 30, 8.8,
29	84455927	1	SHIM,

www.TORMO.BY

14.83(01) CROP PRO PLUS TM, BELT DRIVE, GUIDES

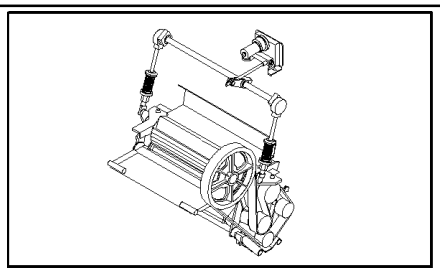

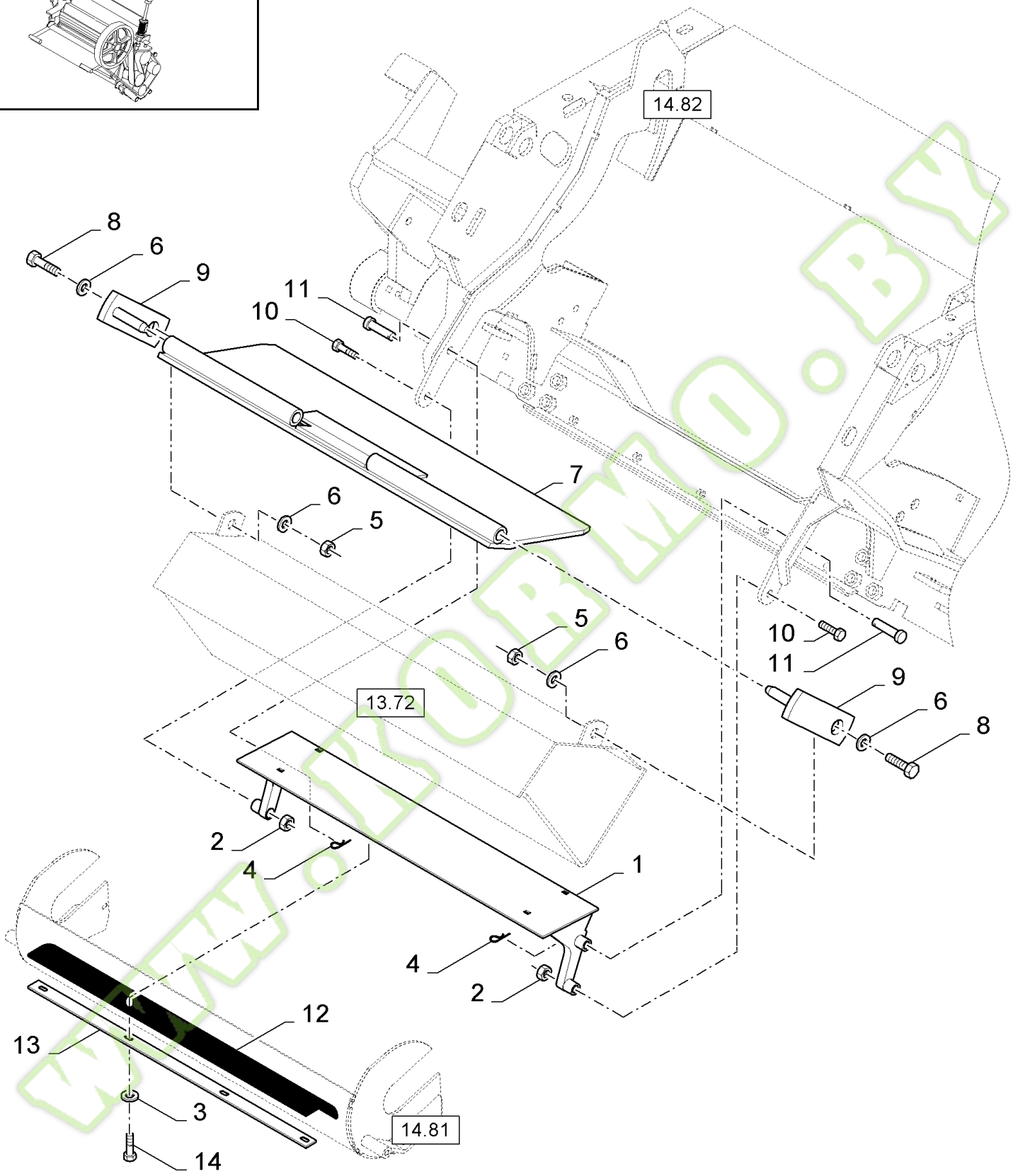

FX50 SELF-PROPELLED FORAGE HARVESTER (10/02-)

14.83(01) CROP PRO PLUS TM, BELT DRIVE, GUIDES

Ref	Part Number	Qty	Description
1	84438305	1	SUPPORT,
2	100038	2	NUT, LOCK, {PP:80100038} M12 x 1.75, Cl 8, M12
3	322358	4	WASHER, LOCK, {PP:80322358} Belleville, M8, 12MM
4	370539	2	PIN, SPLIT (COTTER), {PP:80370539}
5	89706685	2	NUT, M12
6	140046	4	WASHER, LOCK, {PP:80140046} Belleville, M12, 12MM
7	84334020	1	PLATE,
8	9706687	AR	SCREW, {PP:89706687} Hex, M12 x 30, 8.8, M12x30
9	84045688	2	PIN,
10	80300809	2	SCREW, M12x65
11	84018348	2	PIN, CLEVIS,
12	84435048	1	CANVAS,
13	84435108	1	PLATE, FIXING,
14	80120104	4	SCREW, M8x20

www.KOBMO.BY

14.84(01) CROP PRO PLUS TM, BELT DRIVE, TRANSMISSION RH

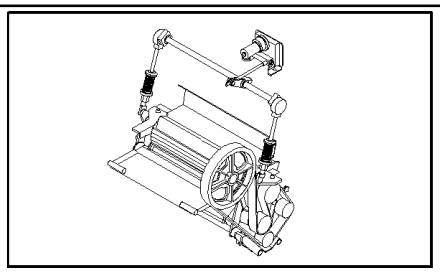

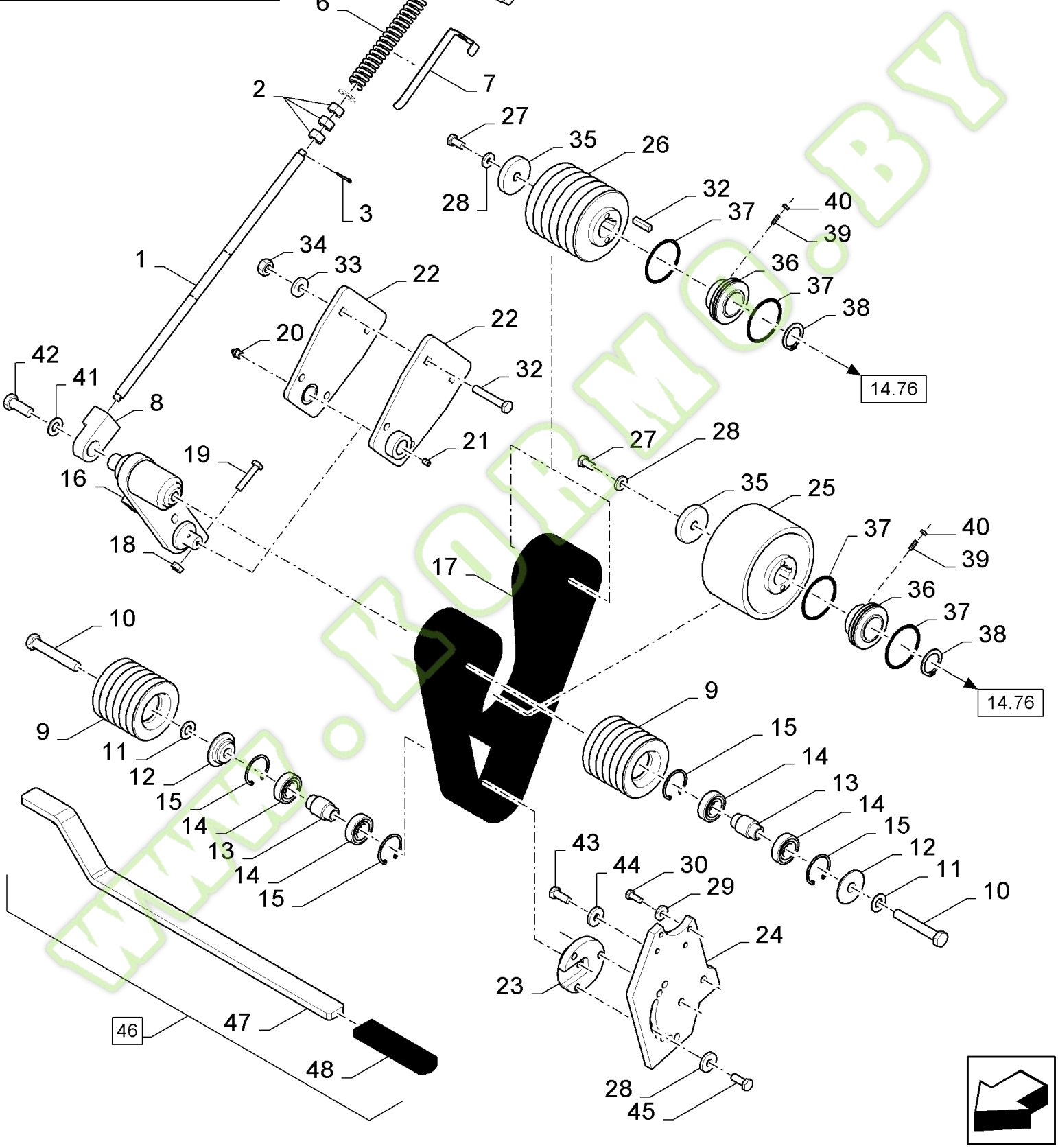

FX50 SELF-PROPELLED FORAGE HARVESTER (10/02-)

14.84(01) CROP PRO PLUS TM, BELT DRIVE, TRANSMISSION RH

Ref	Part Number	Qty	Description
1	84449636	1	ROD,
2	100020	5	NUT, {PP:80100020} M16, Cl 8, M16
3	300401	1	PIN, SPLIT (COTTER), {PP:80300401} M2 x 40, , WHOLE CROP, BSN C322
3	80300409	1	PIN, SPLIT (COTTER), , WHOLE CROP, ASN D323
3	300401	1	PIN, SPLIT (COTTER), {PP:80300401} M2 x 40, , NOT FOR WHOLE CROP, BSN C325
3	80300409	1	PIN, SPLIT (COTTER), , NOT FOR WHOLE CROP, ASN D326
4	445013	1	SPRING, {PP:80445013}
5	84452968	1	INDICATOR, , ASN D334
6	354085	1	SPRING, {PP:80354085}
7	84452970	1	INDICATOR, , BSN C333
8	84449806	1	PLATE,
9	84449174	2	PULLEY,
10	374889	2	SCREW, {PP:80374889} Hex, M16 x 100, 8.8, M16x100
11	370004	2	CIRCLIP, {PP:80370004} 16MM
12	84449568	2	WASHER,
13	84069869	2	SPACER,
14	443898	4	BEARING ASSY, {PP:80443898}
15	370011	4	CIRCLIP, {PP:80370011}
16	84449580	1	PIVOTING ARM,
17	84449232	1	BELT, , WHOLE CROP
17	84449233	1	BELT, , NOT FOR WHOLE CROP
18	100016	1	NUT, {PP:80100016} M10, Cl 8, M10
19	120113	1	BOLT, {PP:80120113} Hex, M10 x 50, 8.8, Full Thd, M10x50
20	9838669	1	NIPPLE, LUBE, {PP:89838669}
21	84012755	1	SCREW, Hex Soc, M6 x 5, M6x5
22	84449309	2	PLATE,
23	84449571	1	WASHER,
24	84453064	1	PLATE,
25	84449559	1	IDLER, , WHOLE CROP
25	84449549	1	IDLER, , NOT FOR WHOLE CROP
26	84449482	1	PULLEY, DRIVEN, , WHOLE CROP
26	84449648	1	PULLEY, DRIVEN, , NOT FOR WHOLE CROP
27	89628065	2	SCREW, M12x45
28	86592701	5	WASHER, M12 x 35 x 5, HT, 12MM
29	322358	4	WASHER, LOCK, {PP:80322358} Belleville, M8, 8MM
30	43128	4	SCREW, {PP:80043128} Hex, M8 x 30, 8.8, M8x30
31	360956	1	KEY, {PP:80360956}
32	300662	2	BOLT, {PP:80300662} Short NK, M12 x 80, Cl8.8, M12x80
33	140046	2	WASHER, LOCK, {PP:80140046} Belleville, M12, 12MM
34	89706685	2	NUT, M12
35	84449449	2	FLANGE,
36	84449346	2	FLANGE,
37	89850345	4	SET OF RINGS,
38	440442	2	CIRCLIP, {PP:80440442}
39	300477	2	SCREW, {PP:80300477} Hex Soc, M8 x 16, Cup Pt, M8x16

EMTRORMO.BY

FX50 SELF-PROPELLED FORAGE HARVESTER (10/02-)

14.84(01) CROP PRO PLUS TM, BELT DRIVE, TRANSMISSION RH

Ref	Part Number	Qty	Description
40	89706690	2	NUT, M8
41	378248	1	WASHER, {PP:80378248} 16MM
42	43167	1	BOLT, {PP:80043167} Hex, M16 x 30, 8.8, Full Thd, Hex, M16 x 30, 8.8, Full Thd
43	9706693	1	SCREW, {PP:89706693} Hex, M12 x 60, 8.8, M12x60, WHOLE CROP, ASN D323
43	9706693	1	SCREW, {PP:89706693} Hex, M12 x 60, 8.8, M12x60, NOT FOR WHOLE CROP, ASN D326
44	140046	1	WASHER, LOCK, {PP:80140046} Belleville, M12, 12MM, WHOLE CROP, ASN D323
44	140046	1	WASHER, LOCK, {PP:80140046} Belleville, M12, 12MM, NOT FOR WHOLE CROP, ASN D326
45	300389	3	SCREW, {PP:80300389} Hex, M12 x 35, 8.8, Full Thd, M12x35, WHOLE CROP, ASN D323
45	300389	3	SCREW, {PP:80300389} Hex, M12 x 35, 8.8, Full Thd, M12x35, NOT FOR WHOLE CROP, ASN D326
46	84453017	1	ARM, (47,48)
47	84453016	1	ARM,
48	332809	1	HANDLE GRIP, {PP:80332809}

www.KOBMO.BE

BLOWER	**SOUFFLERIE**	**VENTILADOR**	**BLÆSER**
VENTOLA	**GEBLÄSE**	**VENTILADOR**	**BLAZER**

SEC. 15

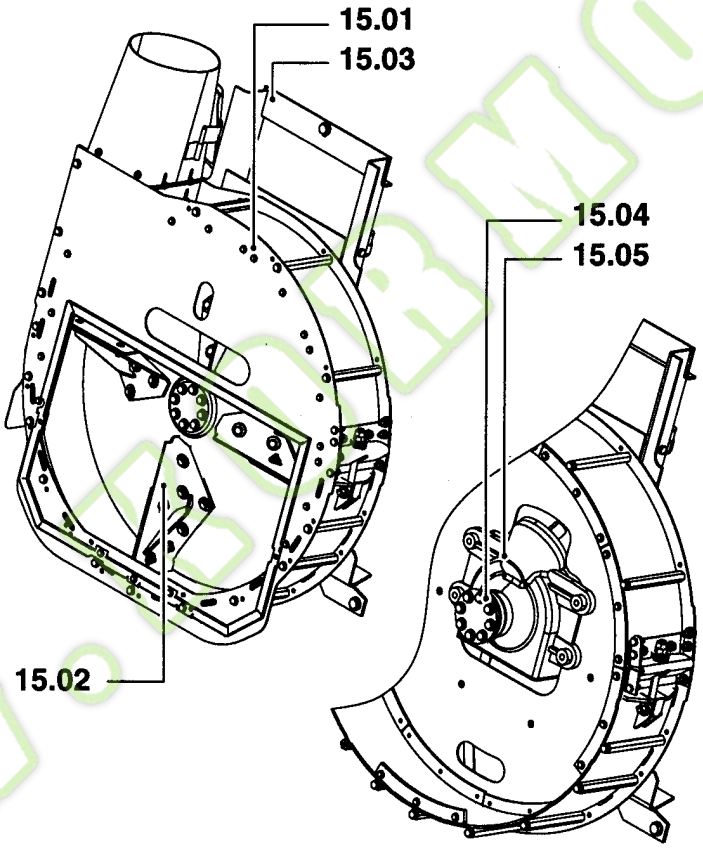

www.BOBMO.BY

Ref	Part Number	Qty	Description

www.KORMO.BY

15.01(01) BLOWER

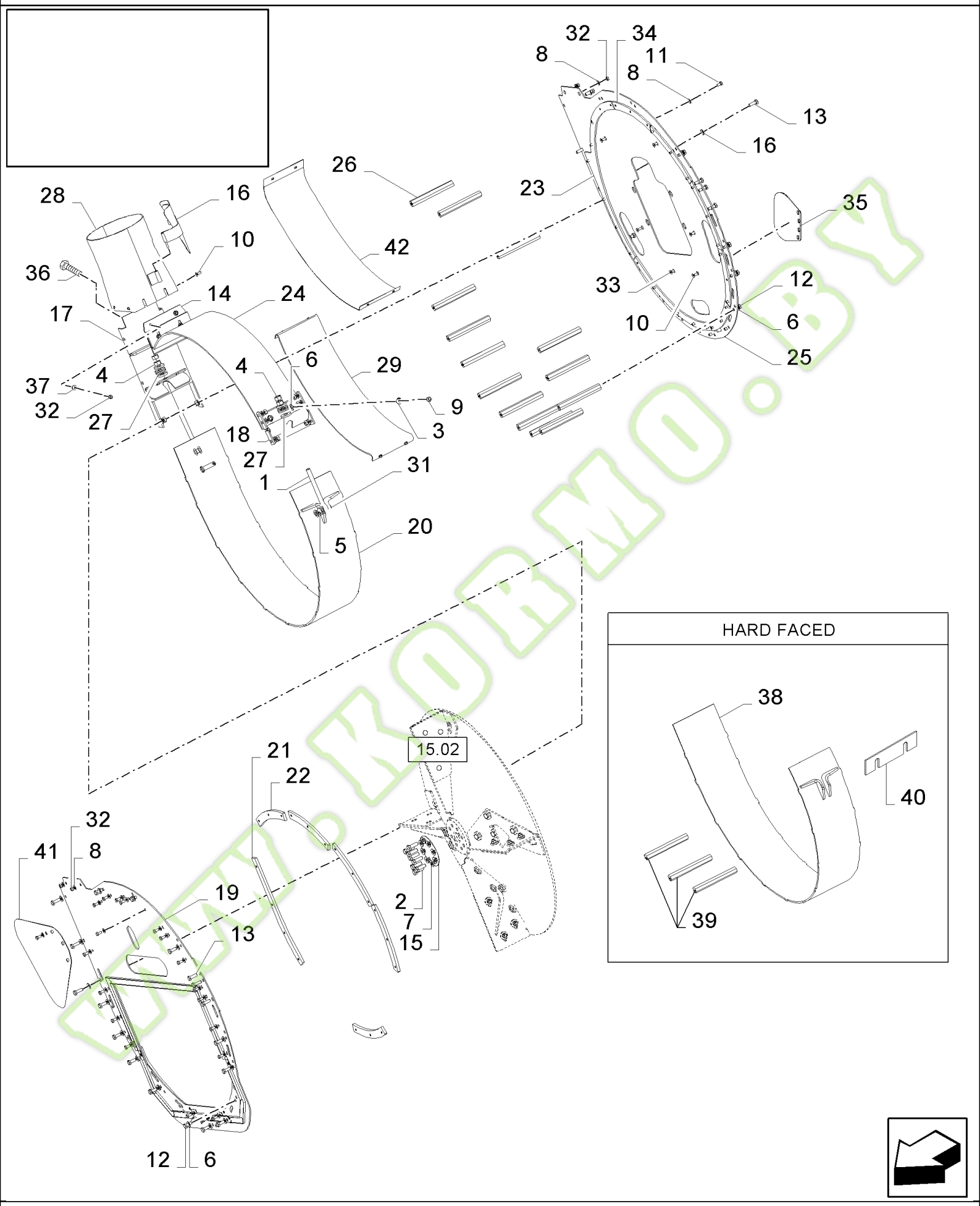

FX50 SELF-PROPELLED FORAGE HARVESTER (10/02-)

15.01(01) BLOWER

Ref	Part Number	Qty	Description
1	120241	2	BOLT, {PP:80120241}
2	80379753	8	SCREW, M12x35
3	100016	14	NUT, {PP:80100016} M10, Cl 8, M10
4	100020	4	NUT, {PP:80100020} M16, Cl 8, M16, Cl 8
5	130007	2	PIN, SPLIT (COTTER), {PP:80130007} M4 x 25,
6	140045	48	WASHER, LOCK, {PP:80140045} Belleville, M10, 10MM
7	140046	8	WASHER, LOCK, {PP:80140046} Belleville, M12, 12MM
8	322358	AR	WASHER, LOCK, {PP:80322358} Belleville, M8, 8MM
9	393698	2	SCREW, {PP:80393698} Hex Soc Flat Hd, M10 x 25, 8.8, M10x20
10	412495	13	SCREW, {PP:80412495} Hex Soc Flat Hd, M8 x 20, 8.8, M8x20
11	336199	18	BOLT, {PP:80336199} Hex, M8 x 12, 8.8, Full Thd, M8x12
12	43139	24	SCREW, {PP:80043139} Hex, M10 x 25, 8.8, Full Thd, M12x25
13	43140	16	BOLT, {PP:80043140} Hex, M10 x 30, 8.8, M10x30
14	84045350	1	PLATE, COVER,
15	84021023	1	PLATE, COVER,
16	84037329	1	COVER,
17	84434645	1	SUPPORT, , BSN C291
17	84448424	1	SUPPORT, , ASN D292
18	84434648	1	SUPPORT, , BSN C291
18	84448422	1	SUPPORT, , ASN D292
19	84434695	1	SHEET, FRONT,
20	84438263	1	PLATE,
21	84438271	1	PLATE,
22	84438280	5	PLATE,
23	84438279	1	PLATE,
24	84438276	1	WEAR STRIP,
25	84077482	1	PLATE,
26	84438265	14	INSERT,
27	84058945	4	WASHER,
28	84002448	1	GUIDE,
29	84444839	1	PLATE, , BSN C385
29	84460063	1	PLATE, , ASN D386
30	86589278	4	SPRING-DISC,
31	9503184	2	PIN, CLEVIS, {PP:89503184}
32	89706690	10	NUT, M8
33	300498	1	SCREW, {PP:80300498} Hex Soc Flat Hd, M8 x 25, 10.9, M8x25, BSN C269
33	84814921	1	SCREW, Hex Soc Flat Hd, M8 x 25, 10.9, M8x25, ASN D270
34	84444576	8	PLATE,
35	84447407	2	PLATE,
36	84814921	AR	SCREW, Hex Soc Flat Hd, M8 x 25, 10.9, M8x25
37	86592699	4	WASHER, M6 x 23 x 4, HT, 8MM
38	84448443	1	PLATE, WEAR, , CHROME HARD FACED, EXTRA WEAR RESISTANT
39	84448409	11	INSERT, , CHROME HARD FACED, EXTRA WEAR RESISTANT
40	84448462	1	PLATE, , CHROME HARD FACED, EXTRA WEAR RESISTANT
41	84459048	1	PLATE, , ASN D358

LMD.KOBMO.BY

15.01(01) BLOWER

Ref	Part Number	Qty	Description
42	84460065	1	PLATE, , ASN D386

www.KOBMO.BY

15.02(01) BLOWER

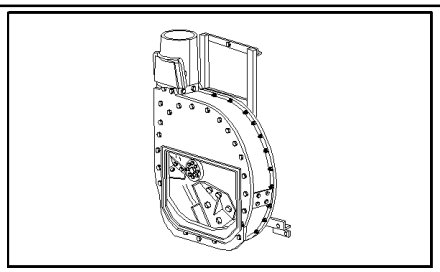

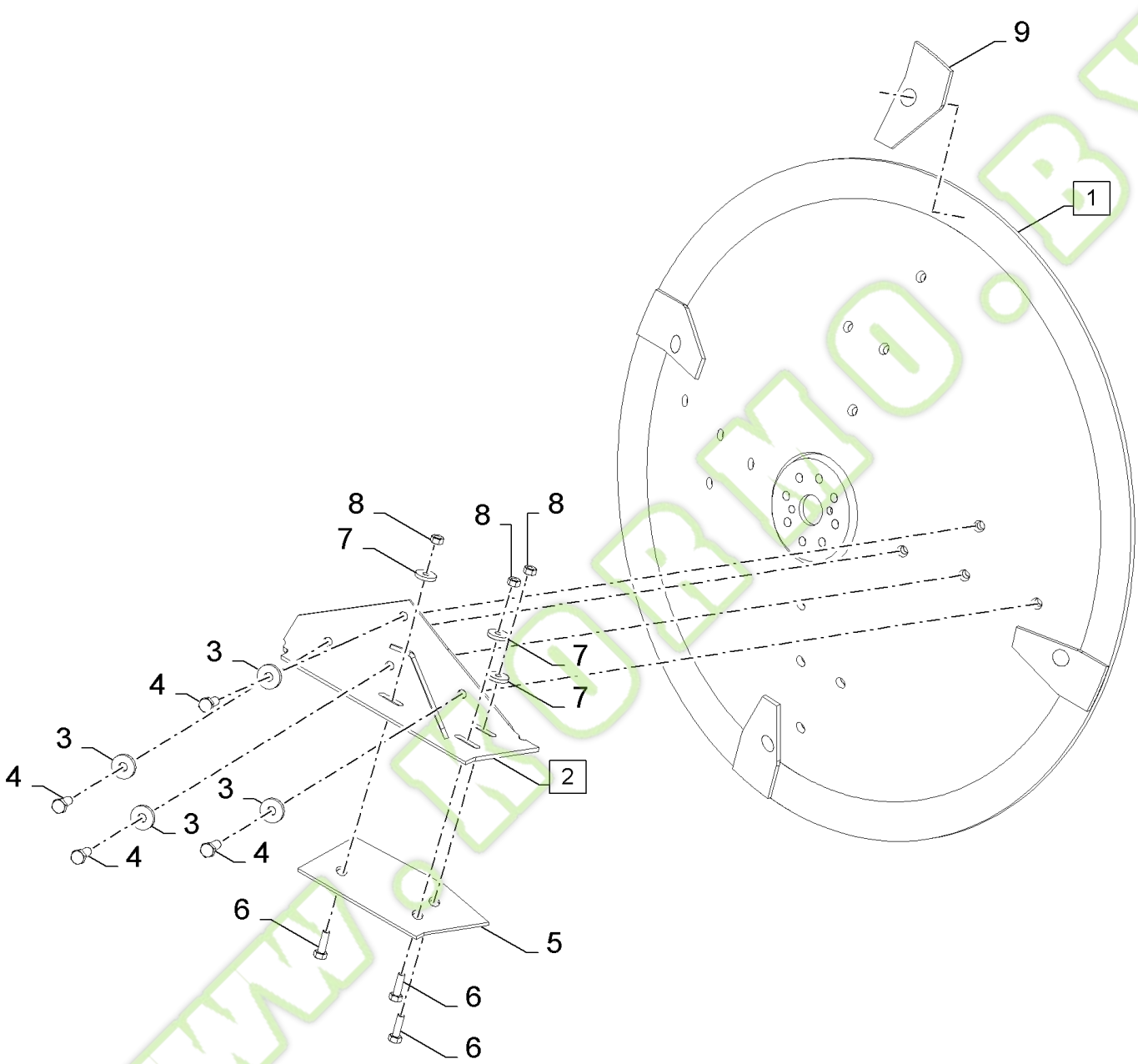

www.tobmo.by

FX50 SELF-PROPELLED FORAGE HARVESTER (10/02-)

15.02(01) BLOWER

Ref	Part Number	Qty	Description
1	84444520	1	DISC, (9)
2	84444493	2	BLADE, TILLAGE, (5 to 8), PART NUMBER CONTAINS 2 BLADES
3	86592701	16	WASHER, M12 x 35 x 5, HT, 12MM
4	9706687	16	SCREW, {PP:89706687} Hex, M12 x 30, 8.8, M12x30
5	84444494	4	WEAR STRIP,
6	84037444	12	BOLT,
7	362810	12	WASHER, {PP:80362810} , BSN C385
7	84461453	12	RING, LOCKING, , ASN D386
8	86500689	12	NUT, M10, Cl 10, M10
9	84444501	4	PLATE, WEAR, , WELDED PART

www.KOBMO.BY

15.03(01) BLOWER

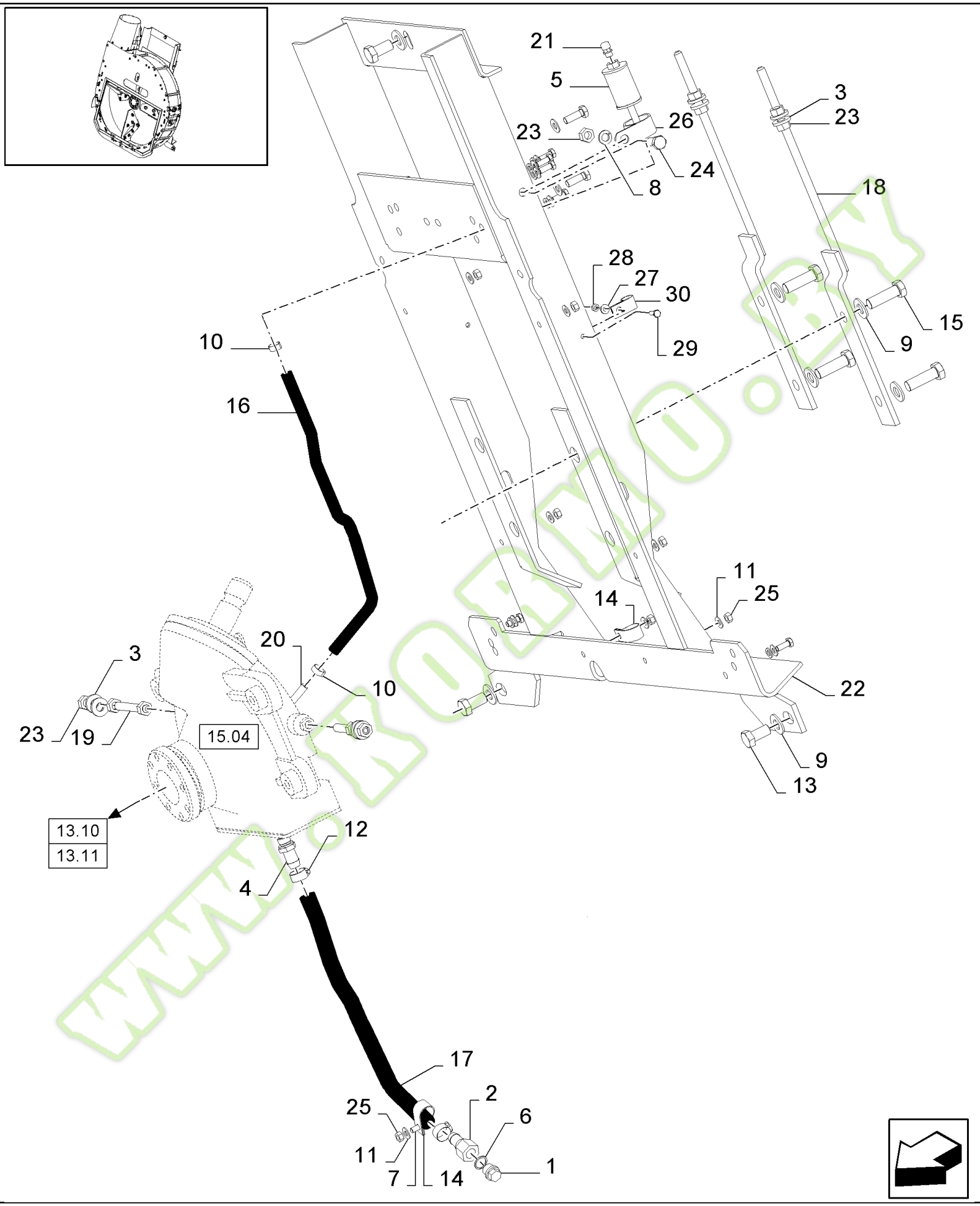

FX50 SELF-PROPELLED FORAGE HARVESTER (10/02-)

15.03(01) BLOWER

Ref	Part Number	Qty	Description
1	150060	1	PLUG, {PP:80150060}
2	80326079	1	CONNECTOR, HYD.,
3	394630	8	WASHER, {PP:80394630} 12MM
4	80449160	1	CONNECTOR, HYD.,
5	80456040	1	RESERVOIR, BRAKE FLUID,
6	9511034	1	GASKET, {PP:89511034}
7	120103	26	SCREW, {PP:80120103} Hex, M8 x 16, 8.8, M8x16
8	140046	1	WASHER, LOCK, {PP:80140046} Belleville, M12, 12MM
9	140048	7	WASHER, LOCK, {PP:80140048} Belleville, M16, 16MM
10	80150064	2	CLAMP,
11	322358	AR	WASHER, LOCK, {PP:80322358} Belleville, M8, 8MM
12	326082	2	CLAMP, {PP:80326082}
13	43167	3	BOLT, {PP:80043167} Hex, M16 x 30, 8.8, Full Thd, Hex, M16 x 30, 8.8, Full Thd
14	619284	2	CLAMP, {PP:80619284}
15	84000007	4	SCREW, Hex, M16 x 1.5 x 50, 8.8, Full Thd, M16x50
16	84000314	AR	HOSE, L=0.5M
17	419447	1	HOSE, {PP:80419447}
18	84004859	2	TIE-ROD, THREADED,
19	84017315	2	ROD, THREADED,
20	84032257	1	TUBE,
21	84068655	1	BREATHER, M6x12
22	84434639	1	FRAME,
23	89706685	11	NUT, M12
24	9706687	1	SCREW, {PP:89706687} Hex, M12 x 30, 8.8, M12x30
25	89706690	6	NUT, CL 8, M8 x 1.25 x 13.0
26	9837593	1	CLAMP, {PP:89837593}

WWW.KUBMO.BY

15.04(01) BLOWER, GEARBOX

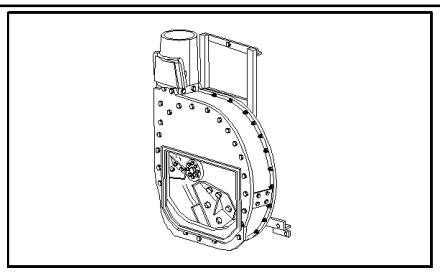

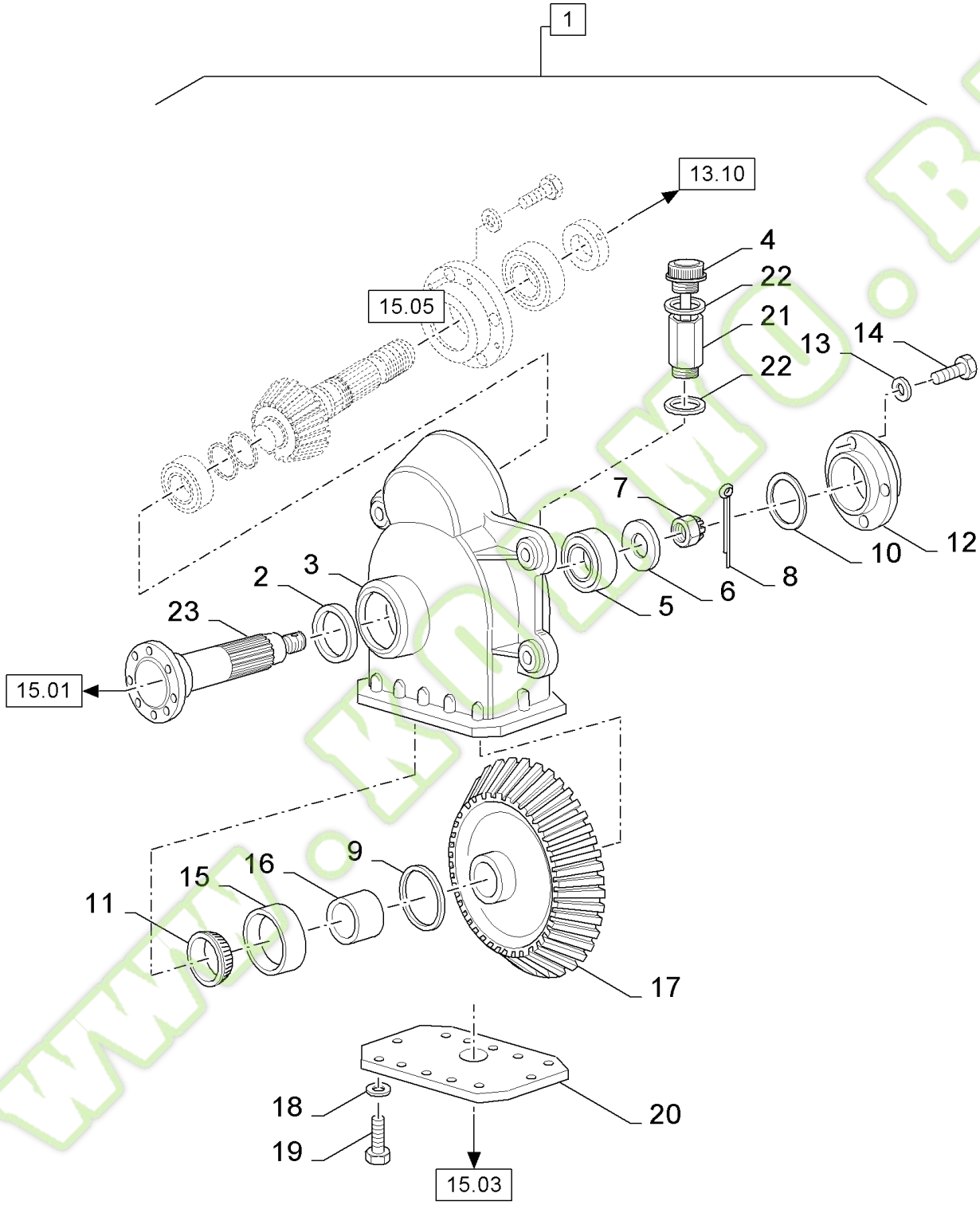

FX50 SELF-PROPELLED FORAGE HARVESTER (10/02-)

15.04(01) BLOWER, GEARBOX

Ref	Part Number	Qty	Description
1	84053905	1	GEARBOX, Incl.figs.15.04 and 15.05, FOR FX30-40-50 ONLY
1	84058269	1	GEARBOX, , 18T/57T, Incl.figs.15.04 and 15.05, FOR FX60 ONLY, BSN C269
1	84053905	1	GEARBOX, , 19T/54T, Incl.figs.15.04 and 15.05, FOR FX60 ONLY, ASN D270
2	381858	1	O-RING, {PP:80381858}
3	84053909	1	HOUSING,
4	84053916	1	INDICATOR, , SCREW TYPE
4	84807623	1	INDICATOR, , PUSH TYPE
5	853535	1	BEARING ASSY, {PP:80853535}
6	84053913	1	WASHER,
7	84053918	1	NUT, M25 x 1.5, Cl 8, M20x1.5
8	84056633	1	PIN, SPLIT (COTTER),
9	84053923	AR	SHIM, SET
10	84053920	AR	SHIM, SET
11	381505	1	BEARING, CONE, {PP:80381505}
12	84053910	1	FLANGE,
13	140045	4	WASHER, LOCK, {PP:80140045} Belleville, M10, 10MM
14	43140	4	BOLT, {PP:80043140} Hex, M10 x 30, 8.8, M10x30
15	381510	1	CUP, {PP:80381510}
16	84053914	1	BUSHING,
17	84053907	1	GEAR, , FOR FX30-40-50 ONLY
17	84062044	1	GEAR, , FOR FX60 ONLY, BSN C269
17	84053907	1	GEAR, , FOR FX60 ONLY, ASN D270
18	322358	12	WASHER, LOCK, {PP:80322358} Belleville, M8, 8MM
20	84053915	1	COVER, , FOR FX30-40-50 ONLY
20	84062045	1	COVER, , FOR FX60 ONLY, BSN C269
20	84053915	1	COVER, , FOR FX60 ONLY, ASN D270
21	84053912	1	CONNECTOR, HYD.,
22	220022	AR	GASKET, {PP:80220022}
23	84053908	1	SHAFT,
19	16043224	12	SCREW, Hex, M8 x 16, 8.8, Full Thd, M8x16

www.KOBMO.BY

15.05(01) BLOWER, GEARBOX

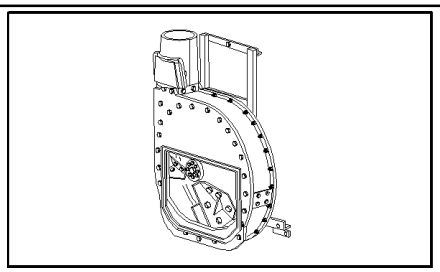

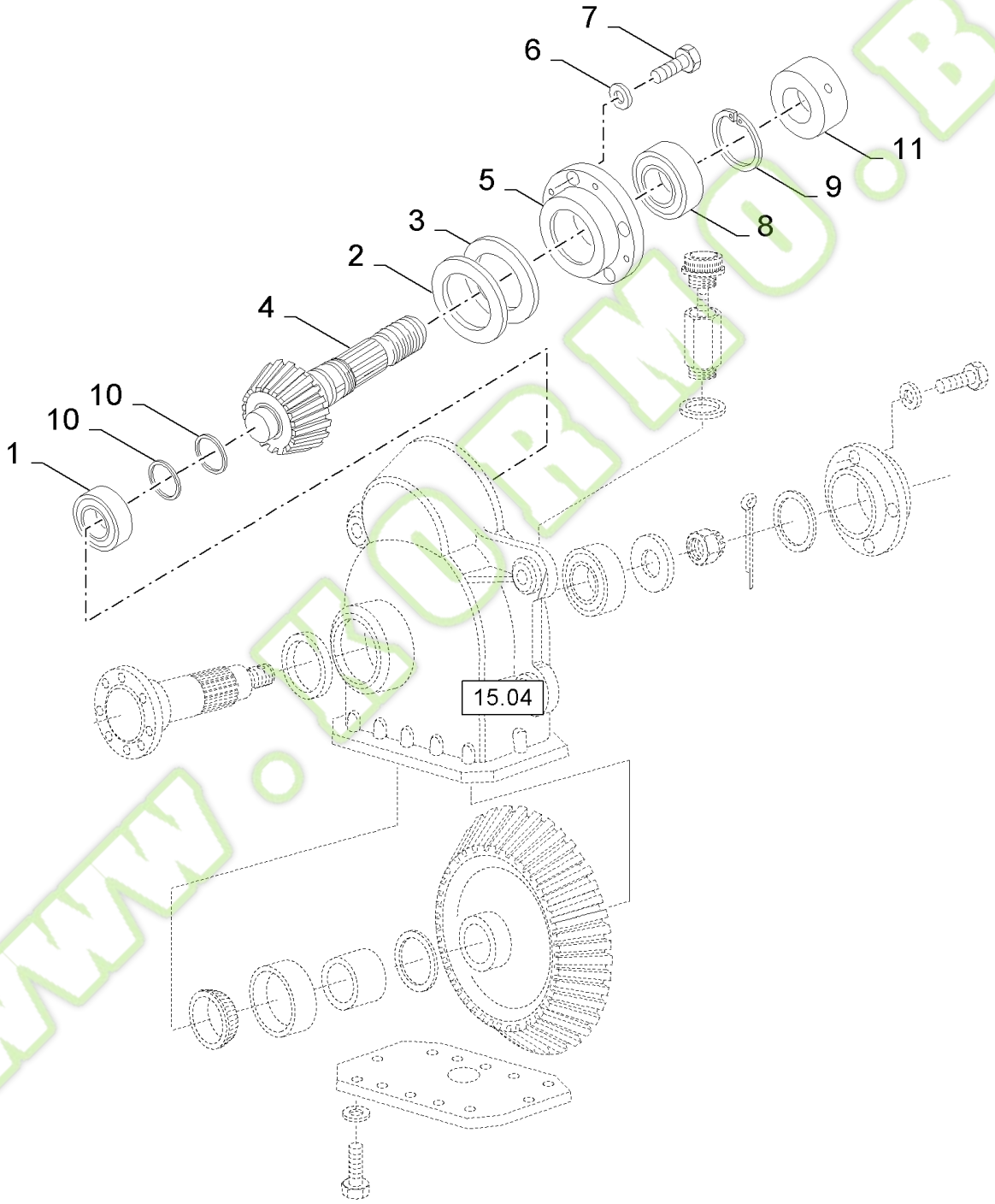

www.BOBMOBY

FX50 SELF-PROPELLED FORAGE HARVESTER (10/02-)

15.05(01) BLOWER, GEARBOX

Ref	Part Number	Qty	Description
1	309085	1	BEARING ASSY, {PP:80309085} , FOR FX30-40-50 ONLY
1	80439692	1	BEARING ASSY, , FOR FX60 ONLY, BSN C269
1	309085	1	BEARING ASSY, {PP:80309085} , FOR FX60 ONLY, ASN D270
2	84053921	AR	SHIM,
3	84053922	AR	SHIM,
4	84053906	1	SHAFT, , FOR FX30-40-50 ONLY
4	84062043	1	SHAFT, , FOR FX60 ONLY, BSN C269
4	84053906	1	SHAFT, , FOR FX60 ONLY, ASN D270
5	84053911	1	COVER,
6	322358	4	WASHER, LOCK, {PP:80322358} Belleville, M8, 8MM
7	43127	4	BOLT, {PP:80043127} Hex, M8 x 25, 8.8, M8x25
8	84819200	1	BEARING ASSY,
9	370021	1	CIRCLIP, {PP:80370021} M85 x 3, Int,
10	84053919	1	SHIM, Set
11	84053924	1	RING, OIL SCRAPER,

www.KOBMO.BY

BLOWER SPOUT	**GOULOTTE**	**BOCA DE DESCARGA**	**UDLØBSRØR**
BOCCA DI USCITA	**AUSWURFBOGEN**	**BOCA DE DESCARGA**	**AFVOERBUIS**

SEC. 16

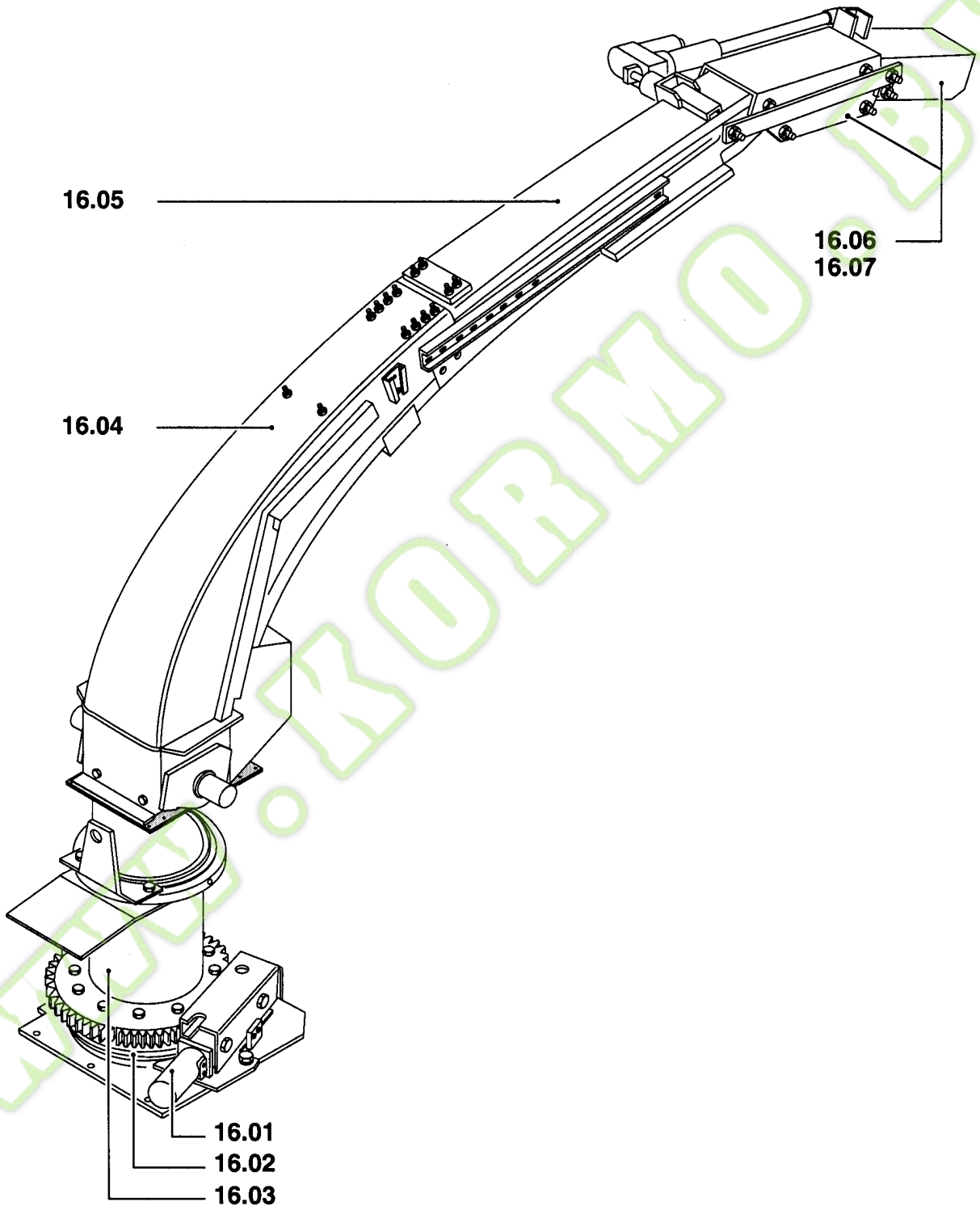

WWW.KOBMO.BY

16.000(01) SECTION LIST 16

Ref	Part Number	Qty	Description

www.KOBMO.BY

16.01(01) SPOUT

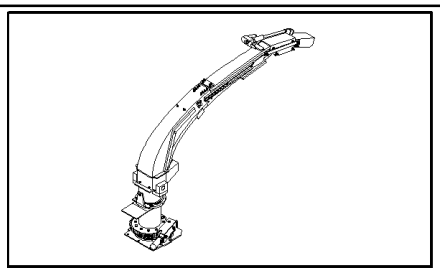

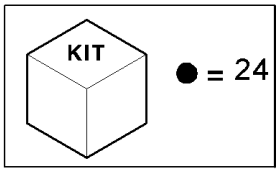

1
15
14
13
25
22
2
3
4
28
17
12
7
8
5
25
11
6
17
23
25
17
10
19
16
19
18
07.14
27
16
20
17
18
21
18
26
19
26
19

www.KOMOBY

FX50 SELF-PROPELLED FORAGE HARVESTER (10/02-)

16.01(01) SPOUT

Ref	Part Number	Qty	Description
1	84043721	1	COVER,
2	84017384	1	COVER,
3	322358	2	WASHER, LOCK, {PP:80322358} Belleville, M8, 8MM
4	80120104	2	SCREW, M8x20
5	43140	4	BOLT, {PP:80043140} Hex, M10 x 30, 8.8, M10x30
6	140045	4	WASHER, LOCK, {PP:80140045} Belleville, M10, 10MM
7	280165	4	SCREW, {PP:80280165} Hex, 3/8"-16 x 1 1/4", G8, Full Thd, 3/8"x11/4"
8	80680	4	WASHER, LOCK, {PP:80080680} 3/8", 3/8"
9	84045386	1	SUPPORT,
10	84807306	1	MOTOR, HYDRAULIC, (23,24)
11	36622	1	WASHER, {PP:80036622}
12	84007262	1	SCREW, WORM,
13	84017370	1	BLOCK, (22)
14	84022832	AR	PLATE, ADJUSTING, THK.:0.2MM
15	84022831	AR	PLATE, ADJUSTING, THK.:0.8MM
16	80337563	7	SCREW, M12x40
17	140046	12	WASHER, LOCK, {PP:80140046} Belleville, M12, 12MM
18	337475	10	NUT, {PP:80337475} M12, Cl 10, M12
19	394630	11	WASHER, {PP:80394630} 12MM
20	84056065	1	SUPPORT,
21	309086	2	SCREW, {PP:80309086} Hex, M12 x 60, 8.8, Full Thd, M12x60
22	32768	1	BUSHING, {PP:80032768}
23	NSS	1	NOT SERVICED SEPARATELY, WEDGE
24	NSS	1	NOT SERVICED SEPARATELY, KIT
25	86505259	4	SCREW, Hex, M12 x 70, 10.9, M12x70
26	84015131	3	BUSHING,
27	84042920	1	BUSHING,
28	442245	1	RING, {PP:80442245}

www.KOBMO.BY

16.02(01) SPOUT, LUBRICATION

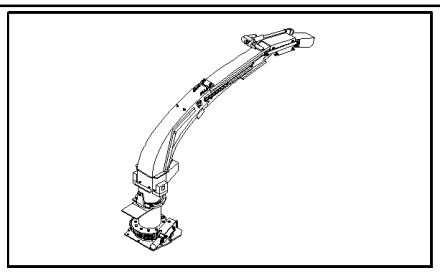

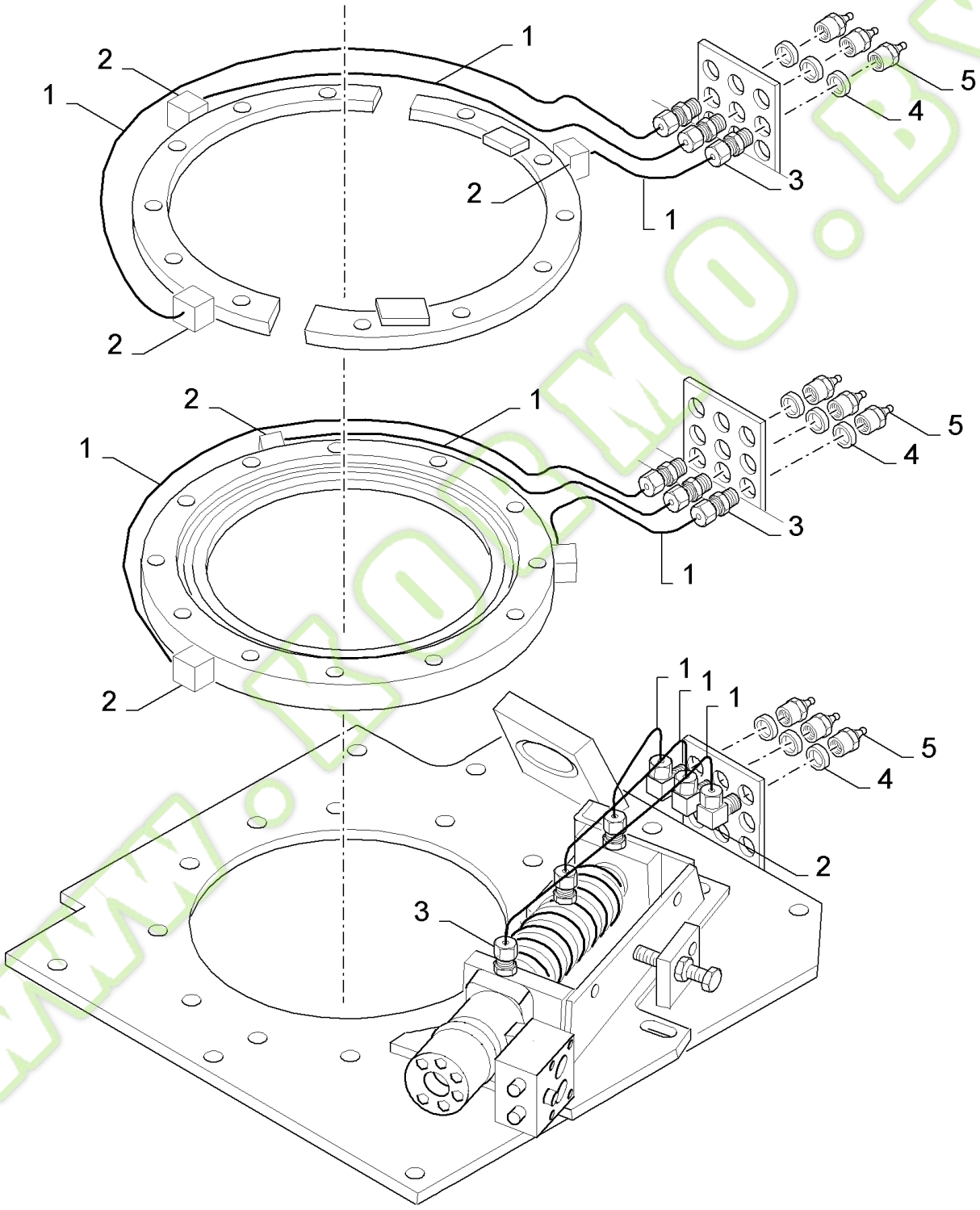

www.bormo.by

16.02(01) SPOUT, LUBRICATION

Ref	Part Number	Qty	Description
1	84032151	AR	TUBE, RIGID, 2.5M
2	48564	9	ELBOW, {PP:80048564}
3	11787	9	CONNECTOR, HYD., {PP:80011787}
4	140045	9	WASHER, LOCK, {PP:80140045} Belleville, M10, 10MM
5	84303	9	NIPPLE, LUBE, {PP:80084303} 1/8"-27 NPT x 1" lg, Fem,

www.KOBMO.BY

16.03(01) SPOUT

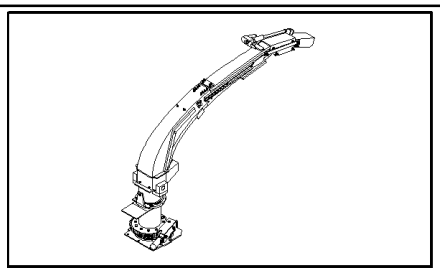

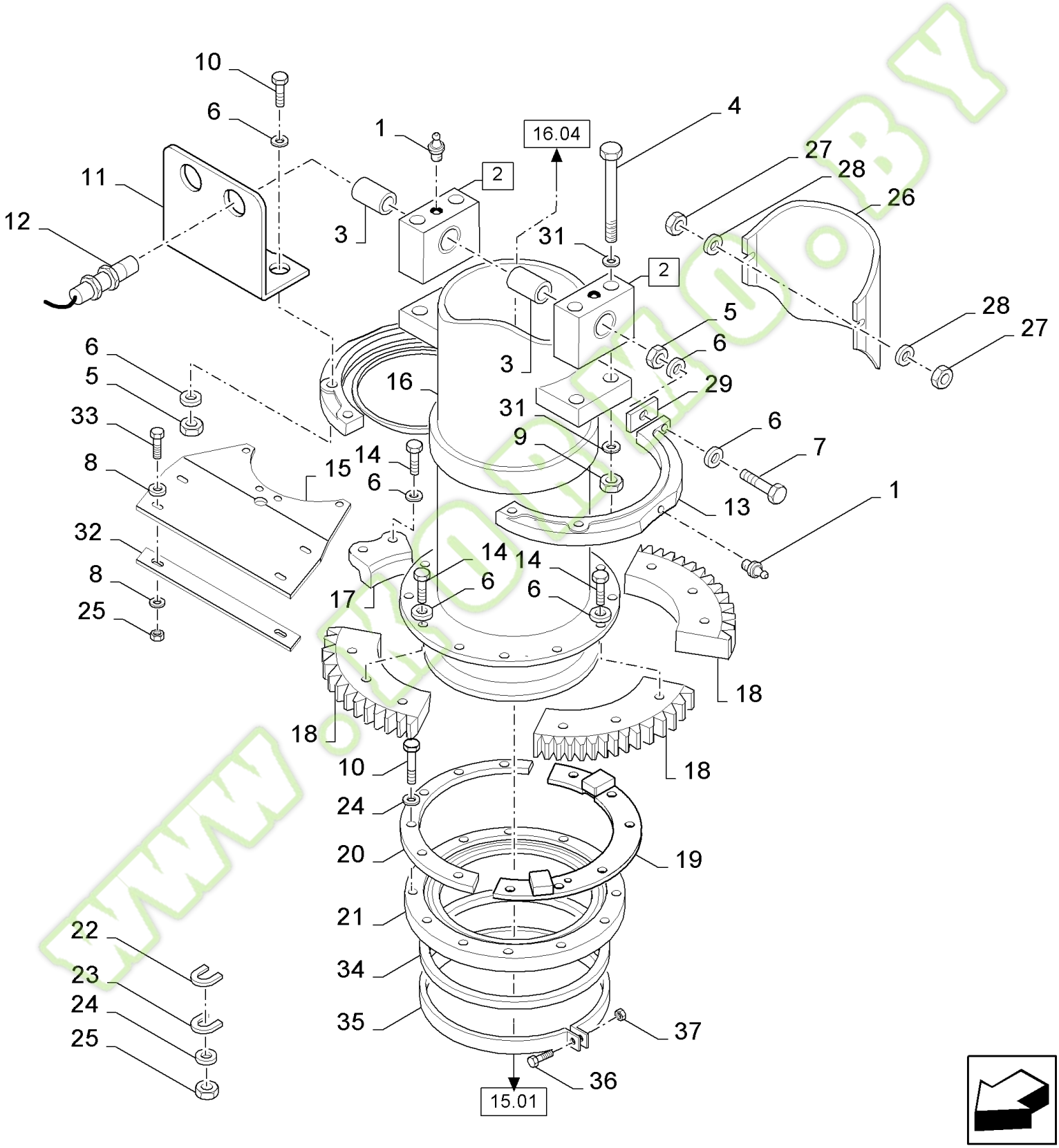

FX50 SELF-PROPELLED FORAGE HARVESTER (10/02-)

16.03(01) SPOUT

Ref	Part Number	Qty	Description
1	323787	4	NIPPLE, LUBE, {PP:80323787}
2	84017450	2	SUPPORT, (3)
3	606351	2	BUSHING, {PP:80606351}
4	354360	4	SCREW, {PP:80354360} Hex, M16 x 130, 8.8, M16x130
5	337475	9	NUT, {PP:80337475} M12, Cl 10, M12
6	140046	19	WASHER, LOCK, {PP:80140046} Belleville, M12, 12MM
7	120083	1	SCREW, {PP:80120083} Hex, M12 x 70, 8.8, M12x70
8	394630	8	WASHER, {PP:80394630} 12MM
9	100039	4	NUT, {PP:80100039} M16 x 2, Cl 8, M16
10	120083	16	SCREW, {PP:80120083} Hex, M12 x 70, 8.8, M12x70
11	84440475	1	BRACKET,
12	84056994	1	SENSOR,
13	84814806	2	HALF-RING,
14	9706687	14	SCREW, {PP:89706687} Hex, M12 x 30, 8.8, M12x30, WELDED PARTS
15	84043751	1	BRACKET,
16	84814280	1	SUPPORT,
17	84004215	1	STOP,
18	84004214	3	GEAR,
19	84440453	1	RING,
20	9822805	1	PLATE, RETAINING, {PP:89822805}
21	84017186	1	RING,
22	9840320	AR	SHIM, {PP:89840320} THK.:0.25MM
23	9622227	AR	SHIM, {PP:89622227} THK.:0.5MM
24	378245	24	WASHER, {PP:80378245} 12MM
25	100038	16	NUT, LOCK, {PP:80100038} M12 x 1.75, Cl 8, M12
26	84019125	1	COVER,
27	89706690	2	NUT, CL 8, M8 x 1.25 x 13.0
28	322358	2	WASHER, LOCK, {PP:80322358} Belleville, M8, 8MM
29	84042924	2	PLATE, ADJUSTING,
30	84042923	1	O-RING,
31	140048	4	WASHER, LOCK, {PP:80140048} Belleville, M16, 16MM
32	84043756	AR	PLATE, ADJUSTING,
33	80337563	4	SCREW, M12x40
34	84052510	1	RING,
35	84052507	1	RING,
36	80120104	1	SCREW, M8x20
37	100067	1	NUT, {PP:80100067} M8 x 1.25", Cl 8, M8

WWW.KORMO.BY

16.04(01) SPOUT

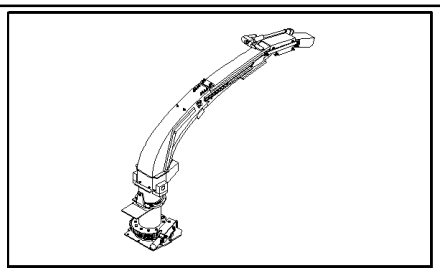

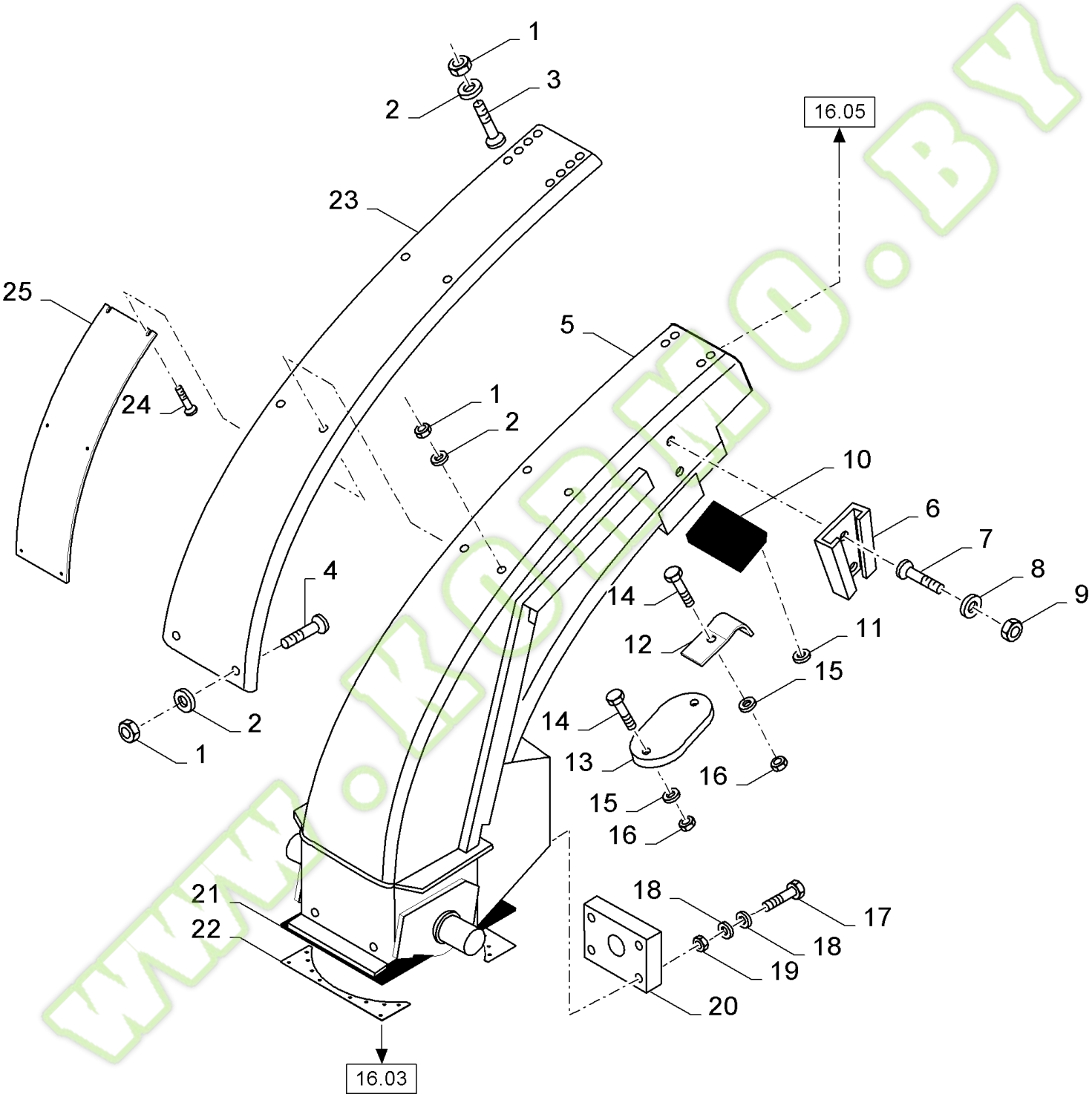

FX50 SELF-PROPELLED FORAGE HARVESTER (10/02-)

16.04(01) SPOUT

Ref	Part Number	Qty	Description
1	100016	AR	NUT, {PP:80100016} M10, Cl 8, M10
2	140045	AR	WASHER, LOCK, {PP:80140045} Belleville, M10, 10MM
3	379528	10	SCREW, {PP:80379528} Hex Flat Hd, M10 x 25, 4.8, M10x25
4	120041	2	BOLT, {PP:80120041} Short NK, M10 x 20, Cl8.8, Full Thd, M10x20
5	84814100	1	SPOUT, DISCHARGE,
6	9837606	2	CLIP, {PP:89837606}
8	322358	4	WASHER, LOCK, {PP:80322358} Belleville, M8, 8MM
9	89706690	4	NUT, CL 8, M8 x 1.25 x 13.0
10	84012923	1	INSULATOR BLOCK,
11	140182	4	WASHER, {PP:80140182} M5 x 18 x 2, 5MM
12	84000008	3	CLAMP,
13	84031783	2	DOOR,
14	120032	4	BOLT, {PP:80120032} Short NK, M6 x 20, Cl8.8, Full Thd, M6x20
15	322357	4	WASHER, LOCK, {PP:80322357} Belleville, M6, Belleville, M6
16	9706755	4	NUT, {PP:89706755} M6, Cl 8, M6
17	80337563	4	SCREW, M12x40
18	140046	4	WASHER, LOCK, {PP:80140046} Belleville, M12, 12MM
19	337475	4	NUT, {PP:80337475} M12, Cl 10, M12
20	84019181	1	SUPPORT,
21	84440366	2	CANVAS,
22	84440364	2	PLATE,
23	683948	1	PLATE, SKID, {PP:80683948}
24	62338	4	BOLT, {PP:80062338}
25	84448151	1	PLATE, SKID, , EXTRA WEARING PLATE
7	16043224	4	SCREW, Hex, M8 x 16, 8.8, Full Thd, M8x16

www.KOBMO.BY

16.05(01) SPOUT

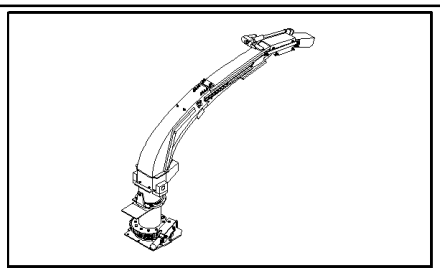

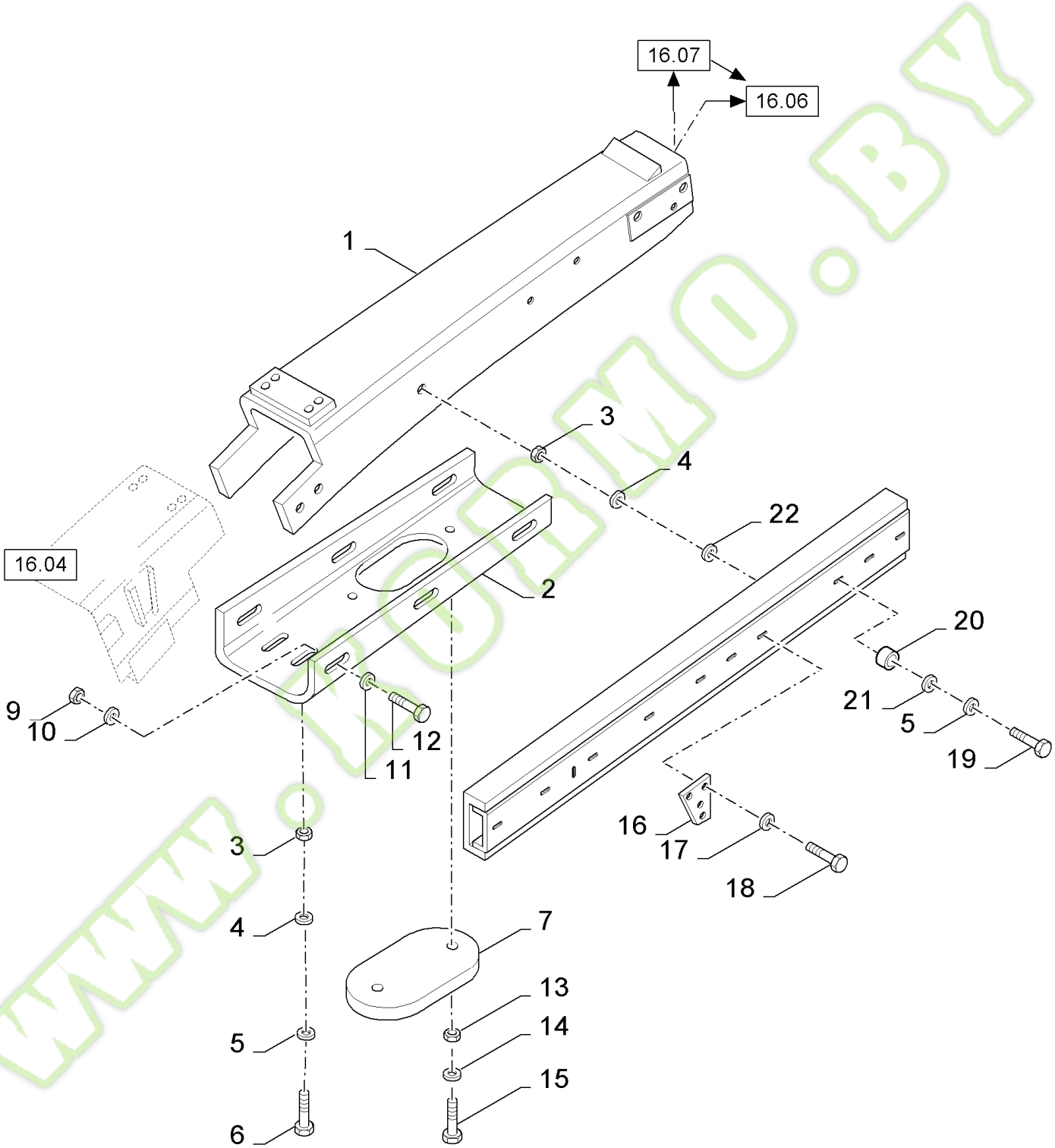

www.KOBMO.BY

FX50 SELF-PROPELLED FORAGE HARVESTER (10/02-)

16.05(01) SPOUT

Ref	Part Number	Qty	Description
1	84400039	1	SPOUT, DISCHARGE,
1	84400040	1	SPOUT, DISCHARGE, , SHORT SPOUT
2	683951	1	SHIELD, {PP:80683951}
3	100016	24	NUT, {PP:80100016} M10, Cl 8, M10
4	140045	24	WASHER, LOCK, {PP:80140045} Belleville, M10, 10MM
5	140018	14	WASHER, {PP:80140018} M12 x 24 x 2.5, 12MM
6	120041	AR	BOLT, {PP:80120041} Short NK, M10 x 20, Cl8.8, Full Thd, M10x20
7	84031783	1	DOOR,
8	84441431	2	PROFILE,
9	89706690	2	NUT, CL 8, M8 x 1.25 x 13.0
10	322358	6	WASHER, LOCK, {PP:80322358} Belleville, M8, 8MM
11	378243	2	WASHER, {PP:80378243} 8MM
12	120037	2	BOLT, {PP:80120037} Short NK, M8 x 20, Cl8.8, Full Thd, M8x20
13	9706755	2	NUT, {PP:89706755} M6, Cl 8, M6
14	322357	2	WASHER, LOCK, {PP:80322357} Belleville, M6, Belleville, M6
15	120032	2	BOLT, {PP:80120032} Short NK, M6 x 20, Cl8.8, Full Thd, M6x20
16	84043902	2	PLATE, COVER,
17	140046	4	WASHER, LOCK, {PP:80140046} Belleville, M12, 12MM
18	388113	4	SCREW, {PP:80388113} Hex, M12 x 16, 8.8, Full Thd, M12x16
19	412183	8	BOLT, {PP:80412183} Short NK, M10 x 35, Cl8.8, Full Thd, M10x35
20	9514390	AR	RING, {PP:89514390}
21	378244	8	WASHER, LOCK, {PP:80378244} 10MM
22	140042	8	WASHER, LOCK, {PP:80140042} M10 x 34 x 3, 10MM

www.KORHO.BY

16.06(01) SPOUT

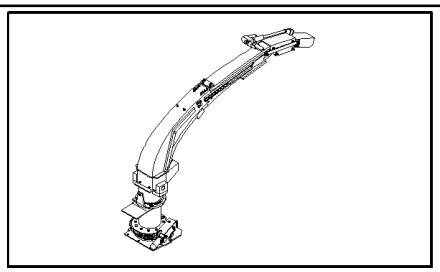

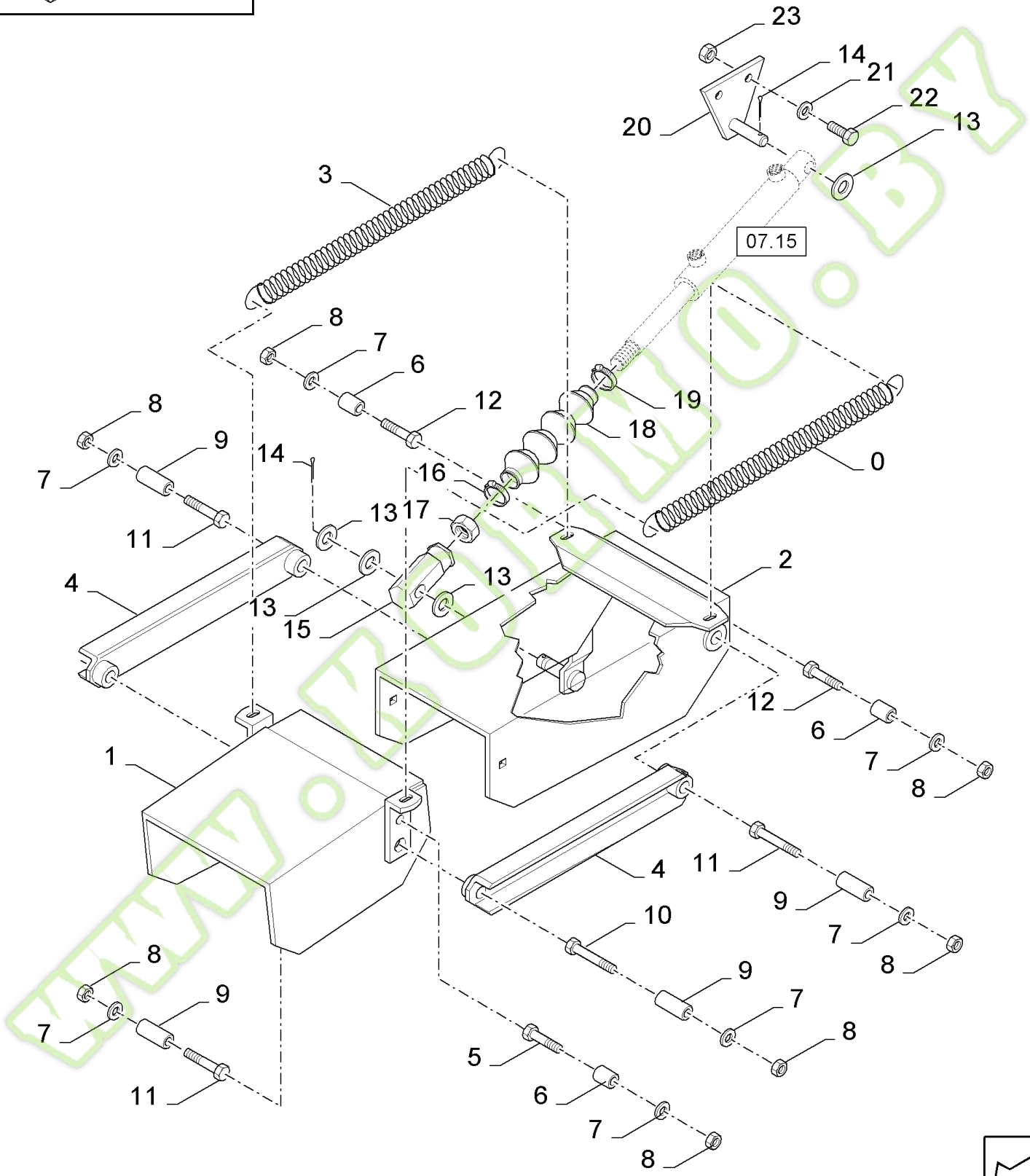

FX50 SELF-PROPELLED FORAGE HARVESTER (10/02-)

16.06(01) SPOUT

Ref	Part Number	Qty	Description
1	84032125	1	DEFLECTOR, , FOR GRASS ONLY
1	84032127	1	DEFLECTOR, , FOR CORN ONLY
2	84032124	1	DEFLECTOR, , FOR GRASS ONLY
2	84032126	1	DEFLECTOR, , FOR CORN ONLY
3	86516632	2	SPRING,
4	84043464	2	BRACKET,
5	120245	2	SCREW, {PP:80120245} Short NK, M10 x 30, Cl8.8, Full Thd, M10x30
6	84043454	4	BUSHING,
7	140045	8	WASHER, LOCK, {PP:80140045} Belleville, M10, 10MM
8	100016	8	NUT, {PP:80100016} M10, Cl 8, M10
9	84043453	4	BUSHING,
10	120259	2	SCREW, {PP:80120259} Hex Soc Flat Hd, M10 x 40, 8.8, M10x40
11	374892	2	BOLT, {PP:80374892} Short NK, M10 x 40, Cl8.8, Full Thd, M10x40
12	80320772	2	SCREW, M10x30
13	378245	3	WASHER, {PP:80378245} 12MM
14	130005	2	PIN, SPLIT (COTTER), {PP:80130005} M3.2 x 32, 3x32
15	84032120	1	CONNECTOR, HYD.,
16	89993154	AR	CLAMP,
17	364164	1	NUT, {PP:80364164} Thin, M16 x 1.5, Cl 04, M16x1.5
18	84021572	1	BELLOWS,
19	382527	1	CLAMP, {PP:80382527}
20	84032119	1	SUPPORT,
21	140046	2	WASHER, LOCK, {PP:80140046} Belleville, M12, 12MM
22	80043151	2	SCREW, M12x20
23	337475	2	NUT, {PP:80337475} M12, Cl 10, M12

WWW.KORMO.BY

16.07(01) SPOUT EXTENSION

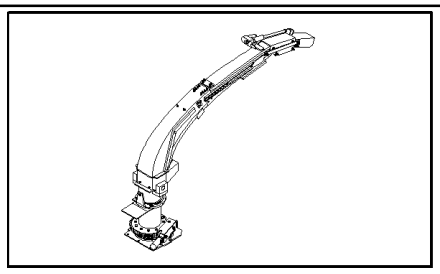

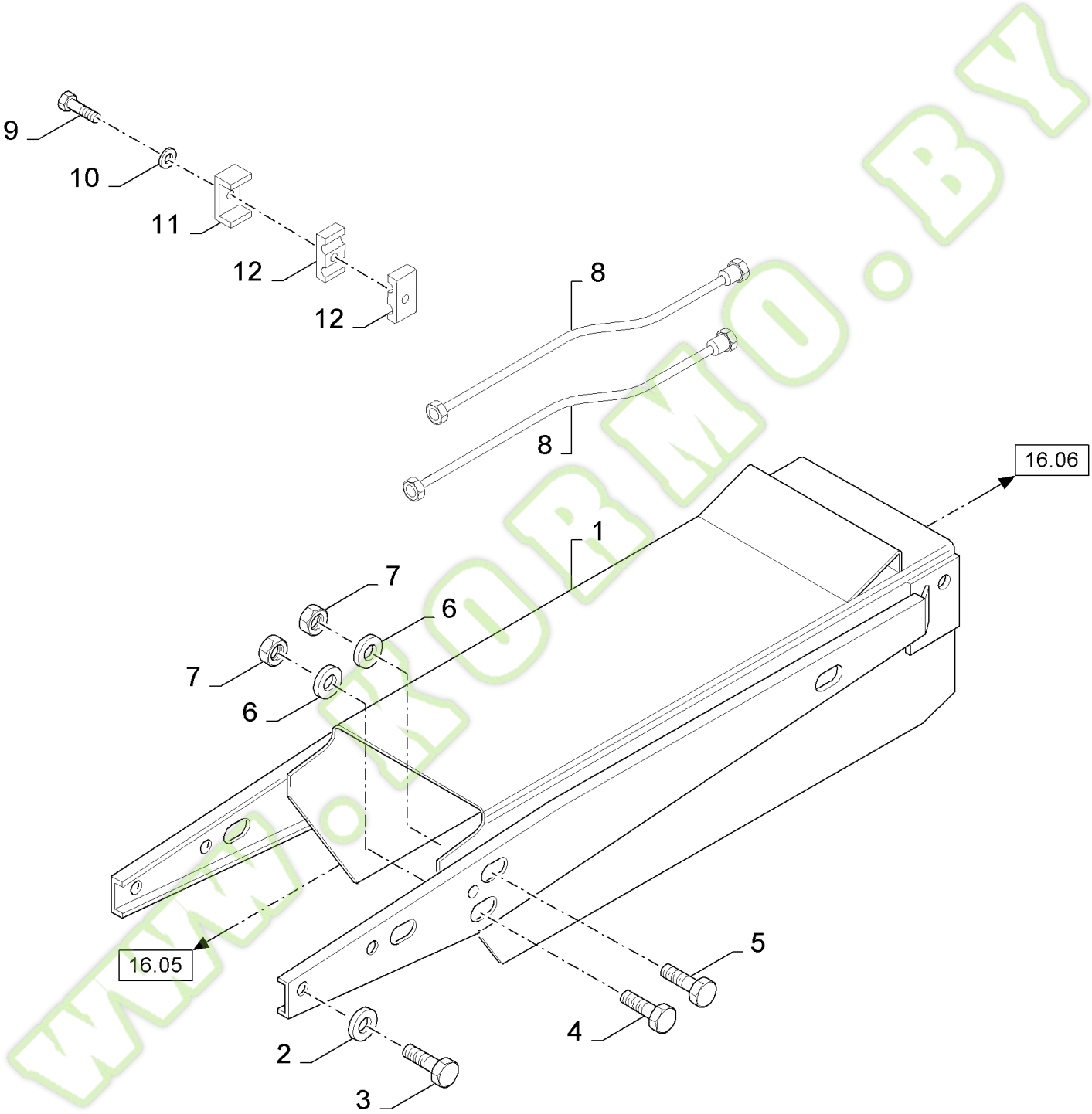

www.BOBMO.BY

FX50 SELF-PROPELLED FORAGE HARVESTER (10/02-)

16.07(01) SPOUT EXTENSION

Ref	Part Number	Qty	Description
1	84043354	1	EXTENSION,
2	140046	4	WASHER, LOCK, {PP:80140046} Belleville, M12, 12MM
3	80043151	4	SCREW, M12x20
4	120041	2	BOLT, {PP:80120041} Short NK, M10 x 20, Cl8.8, Full Thd, M10x20
5	412671	2	SCREW, {PP:80412671} Hex Soc Flat Hd, M10 x 20, 8.8, M10x20
6	140045	4	WASHER, LOCK, {PP:80140045} Belleville, M10, 10MM
7	100016	4	NUT, {PP:80100016} M10, Cl 8, M10
8	9831825	2	HOSE, {PP:89831825}
9	120056	2	SCREW, {PP:80120056} Hex, M6 x 50, 8.8, M6x50
10	322357	2	WASHER, LOCK, {PP:80322357} Belleville, M6, Belleville, M6
11	431941	2	SUPPORT, {PP:80431941}
12	430357	4	CLAMP, {PP:80430357}

www.KOBMO.BY

ACCESSORIES	**ACCESSOIRES**	**ACCESORIOS**	**TILBEHØR**
ACCESSORI	**ZUBEHÖR**	**ACESSORIOS**	**TOEBEHOREN**

SEC. 18

18.01

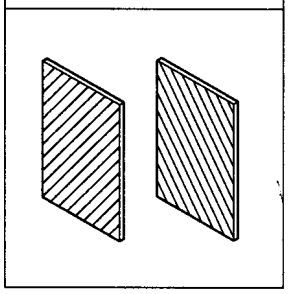

18.02

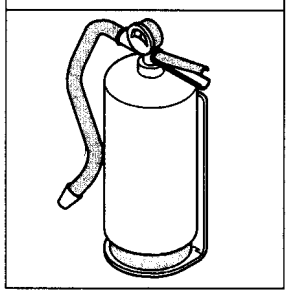

18.03

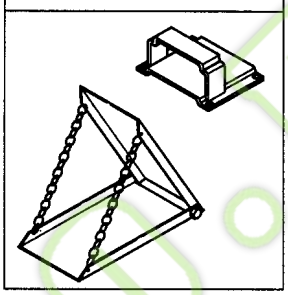

18.04

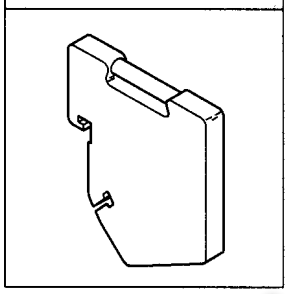

18.05

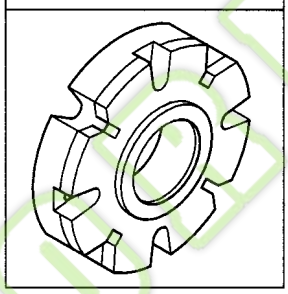

18.06

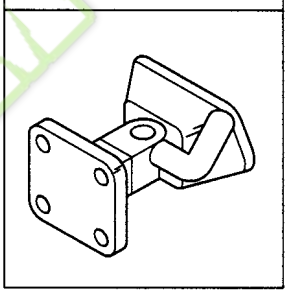

18.07

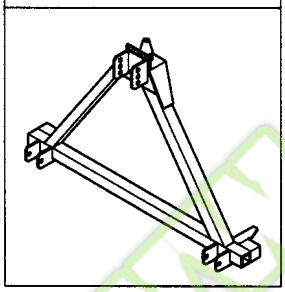

18.08

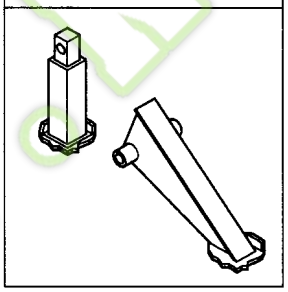

18.09

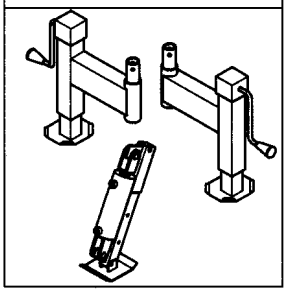

18.10

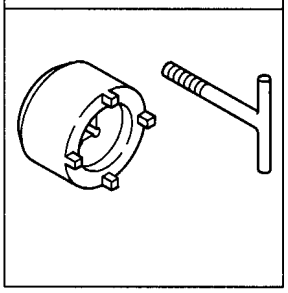

18.11

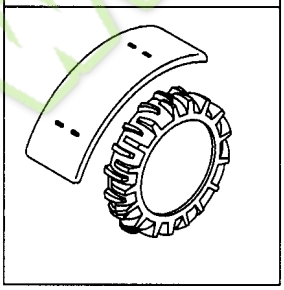

18.12

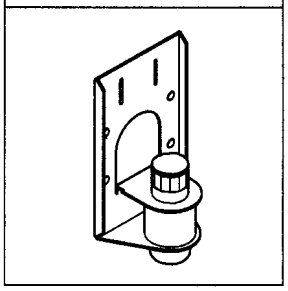

18.13

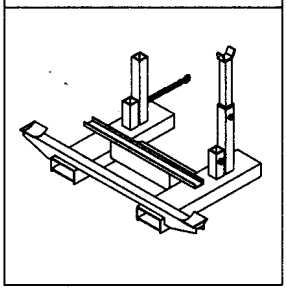

18.14

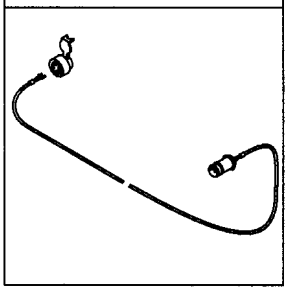

MTZ-ROBOT.BY

18.000(01) SECTION LIST 18

Ref	Part Number	Qty	Description

WWW.KORMO.BY

18.01(01) HAZARD WARNING PLATES

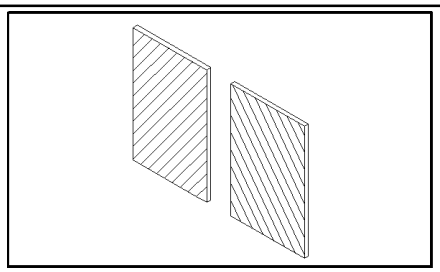

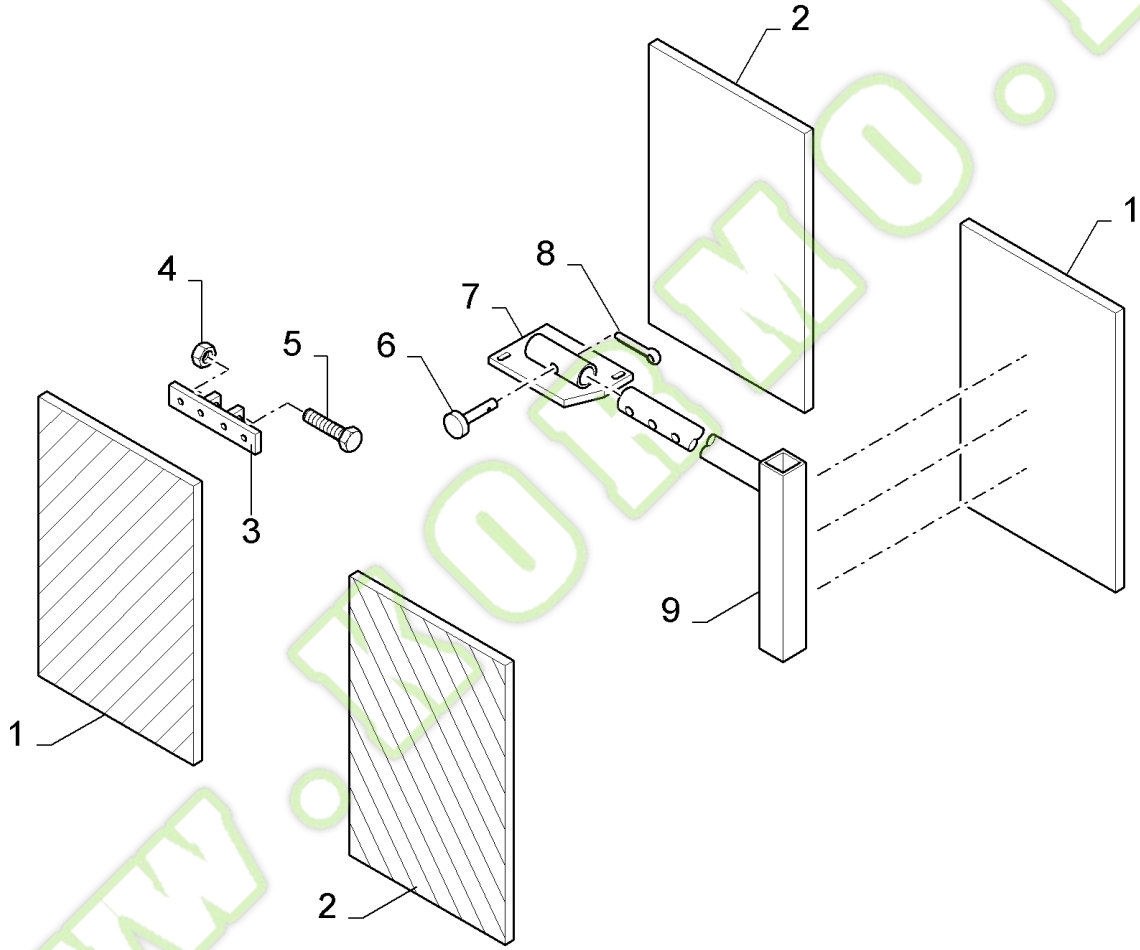

www.lomo.by

18.01(01) HAZARD WARNING PLATES

Ref	Part Number	Qty	Description
1	84014756	2	PLATE,
2	84014755	2	PLATE,
3	84021411	4	SUPPORT,
4	100067	4	NUT, {PP:80100067} M8 x 1.25", Cl 8, M8
5	120060	4	SCREW, {PP:80120060} Hex, M8 x 50, 8.8, M8x50
6	390040	2	PIN, {PP:80390040}
7	84021383	1	SUPPORT, LH
7	84021384	1	SUPPORT, RH
8	370539	2	PIN, SPLIT (COTTER), {PP:80370539}
9	84021387	2	SUPPORT,

www.KOBMO.BY

18.02(01) FIRE EXTINGUISHER

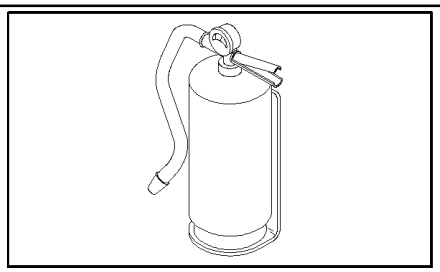

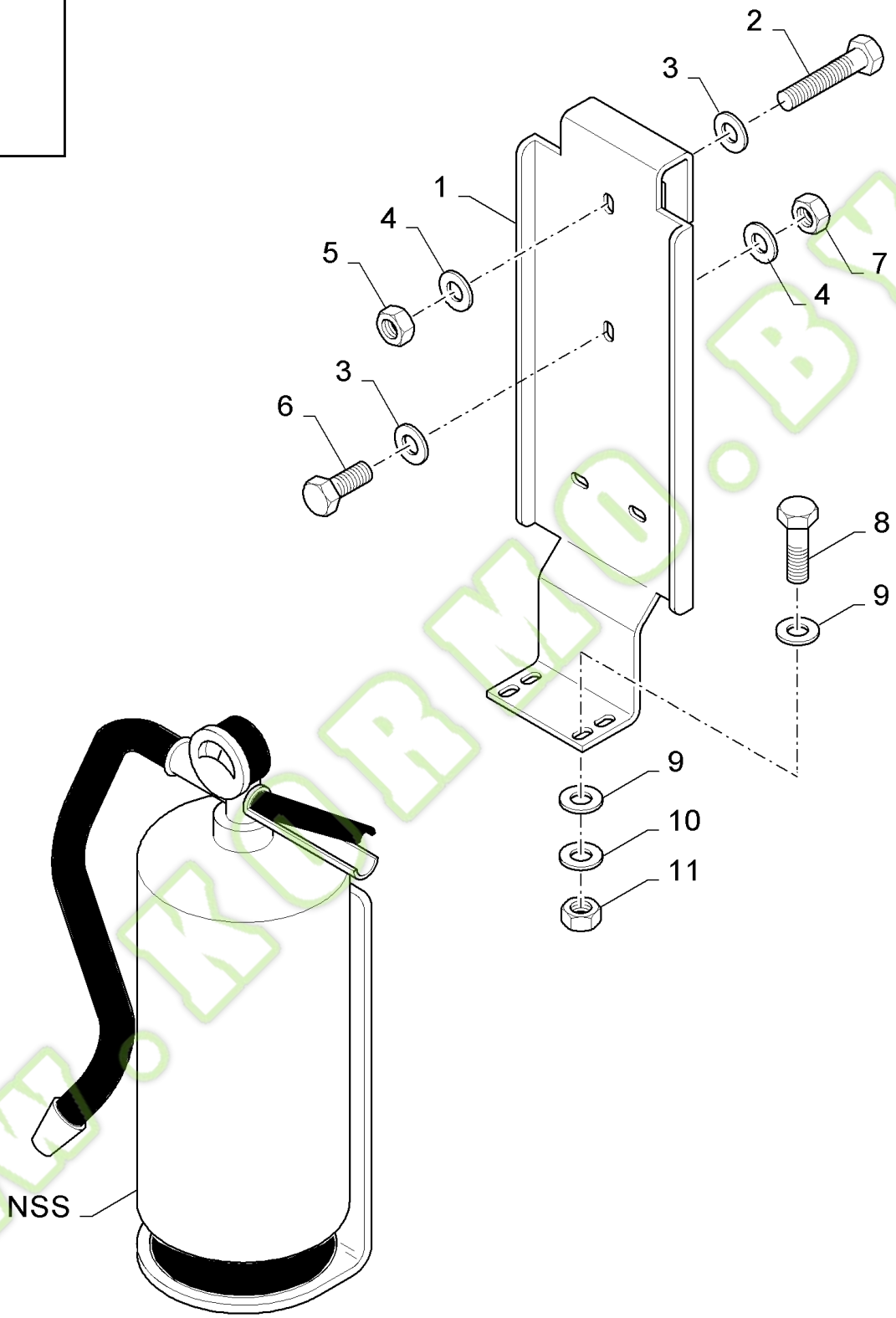

WWW.ROBMO.BY

FX50 SELF-PROPELLED FORAGE HARVESTER (10/02-)

18.02(01) FIRE EXTINGUISHER

Ref	Part Number	Qty	Description
1	84068336	1	SUPPORT,
2	300508	2	SCREW, {PP:80300508} Hex, M6 x 45, 8.8, M6x45
3	140040	6	WASHER, {PP:80140040} M6 x 22 x 2, 6MM
4	412649	6	WASHER, LOCK, {PP:80412649} Belleville, M6, Belleville, M6
5	353308	2	NUT, {PP:80353308} M6 x 1, Cl 8, M6
6	86508568	4	SCREW, Hex, M6 x 16, 8.8, M6x16
7	9706755	4	NUT, {PP:89706755} M6, Cl 8, M6
8	120098	4	SCREW, {PP:80120098} Hex, M5 x 20, 8.8, Full Thd, M5x20
9	140182	8	WASHER, {PP:80140182} M5 x 18 x 2, 5.5MM
10	322356	4	WASHER, LOCK, {PP:80322356} 5MM
11	86508813	4	NUT, M4, Cl 8, M5

WWW.KOBMO.BY

18.03(01) CHOCK

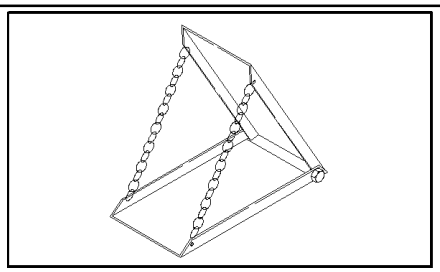

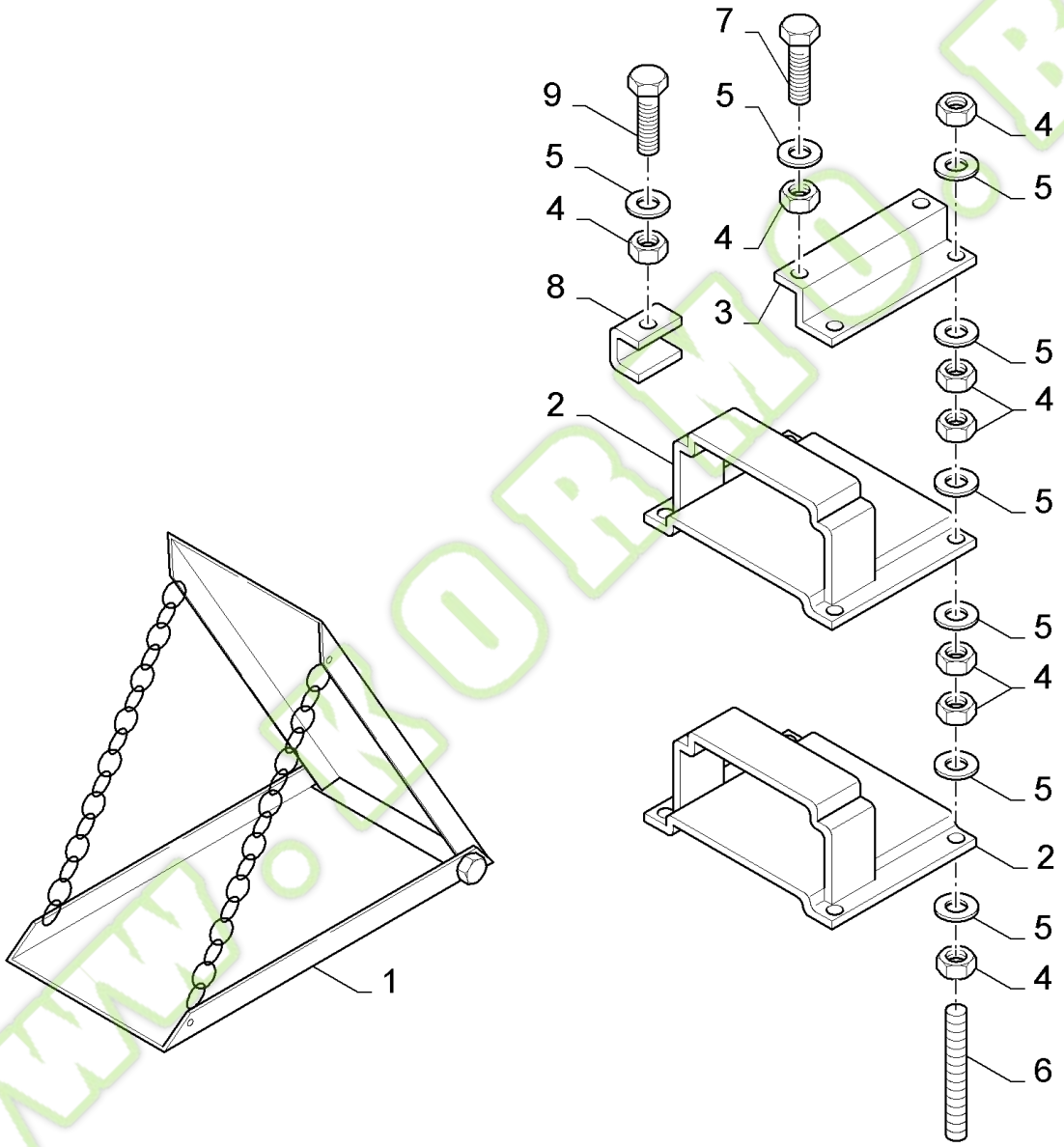

WWW.MORIO.BY

FX50 SELF-PROPELLED FORAGE HARVESTER (10/02-)

18.03(01) CHOCK

Ref	Part Number	Qty	Description
1	452769	2	WHEEL CHOCK, {PP:80452769}
2	452770	2	CLAMP, {PP:80452770}
3	84019403	2	SUPPORT,
4	100016	20	NUT, {PP:80100016} M10, Cl 8, M10
5	140045	20	WASHER, LOCK, {PP:80140045} Belleville, M10, 10MM
6	84019483	2	ROD,
7	120041	2	BOLT, {PP:80120041} Short NK, M10 x 20, Cl8.8, Full Thd, M10x20
8	84018986	4	SUPPORT,
9	120109	6	SCREW, {PP:80120109} Hex, M10 x 20, 8.8, Full Thd, M10x20

www.KOBMO.BY

18.04(01) COUNTERWEIGHTS

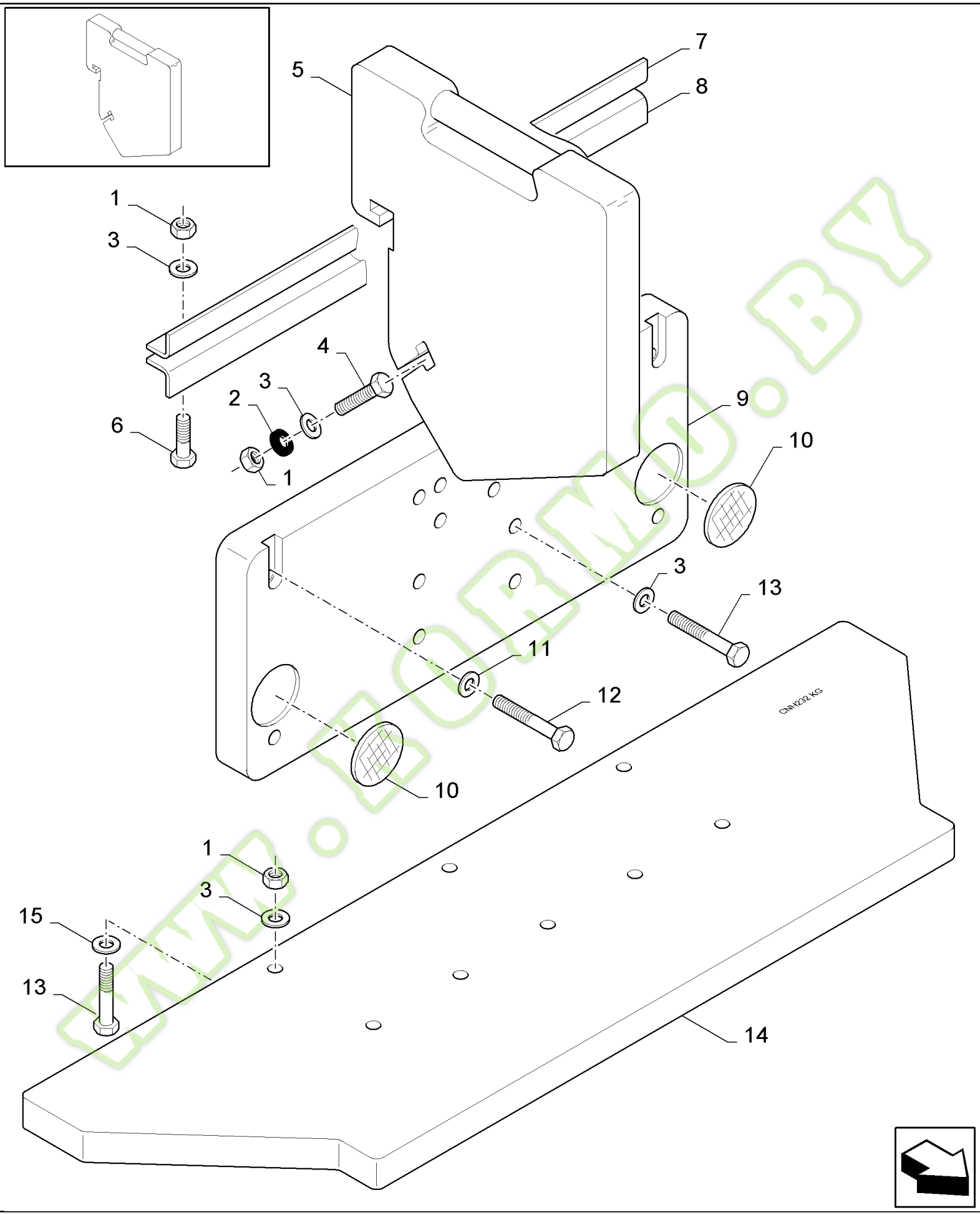

EMW.BORMO.BY

FX50 SELF-PROPELLED FORAGE HARVESTER (10/02-)

18.04(01) COUNTERWEIGHTS

Ref	Part Number	Qty	Description
1	100020	AR	NUT, {PP:80100020} M16, Cl 8, M16, Cl 8
2	84017220	AR	WASHER, 16.5MM
3	140048	AR	WASHER, LOCK, {PP:80140048} Belleville, M16, 16MM
4	385923	AR	SCREW, {PP:80385923} Hex, M16 x 55, 8.8, Full Thd, Hex, M16 x 55, 8.8, Full Thd
4	120092	AR	SCREW, {PP:80120092} Hex, M16 x 70, 8.8, Hex, M16 x 70, 8.8
5	84435924	AR	WEIGHT, ADVANCE DEVICE,
6	120090	3	SCREW, {PP:80120090} Hex, M16 x 50, 8.8, Hex, M16 x 50, 8.8
7	84806685	1	PROFILE,
8	84806684	1	PROFILE,
9	84002129	AR	WEIGHT, ADVANCE DEVICE, 330kg
10	437024	2	REFLECTOR, LAMP, {PP:80437024}
11	322359	4	WASHER, LOCK, {PP:80322359} Belleville, M20, 20MM
12	412427	4	SCREW, {PP:80412427} Hex, M20 x 130, 8.8, M20x130
12	16440421	4	BOLT, Hex, M20 x 200, 8.8, M20x200
12	84056367	4	SCREW, Hex, M20 x 280, 8.8, M20x300
13	80334967	4	SCREW, M16x140
13	86624001	16	SCREW, Hex, M16 x 220, 8.8, M16x220
13	350616	8	SCREW, {PP:80350616} Hex, M16 x 90, 8.8, M16x90
13	86508586	8	SCREW, Hex, M16 x 240, 8.8, M16x240
13	84056369	4	SCREW, Hex, M16 x 300, 8.8, M16x300
14	84448963	AR	WEIGHT, COUNTER, 232kg
15	86588503	8	WASHER, M16 x 28 x 3, 16MM

www.KOBMO.BY

18.05(01) COUNTERWEIGHTS

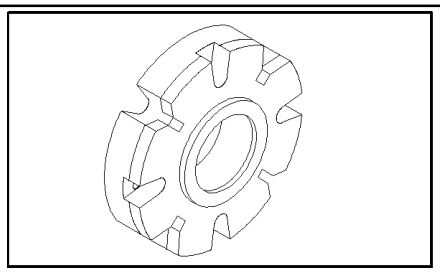

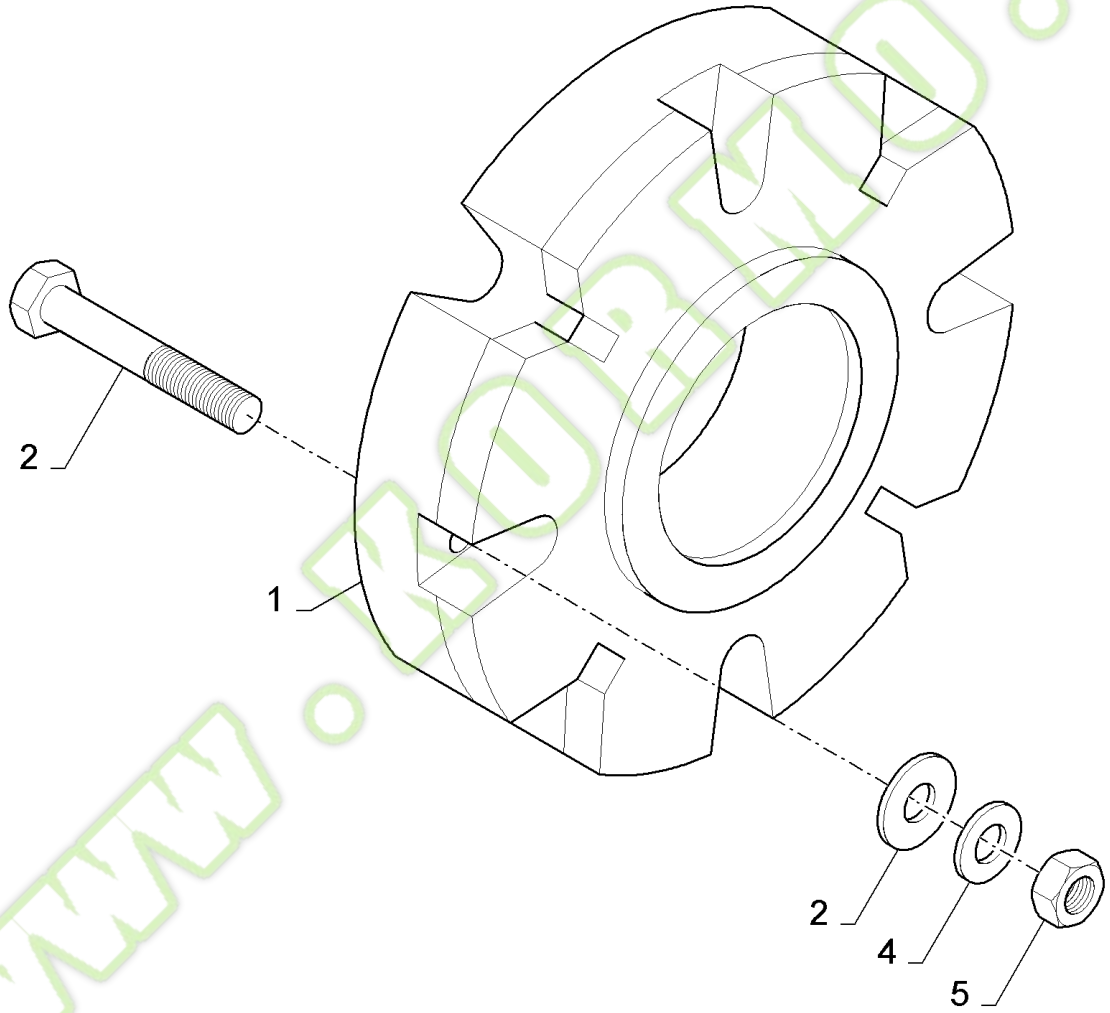

www.BORMO.BY

18.05(01) COUNTERWEIGHTS

Ref	Part Number	Qty	Description
1	325121	AR	WEIGHT, {PP:80325121} 27.5KG
2	412585	8	SCREW, {PP:80412585} Hex, M12 x 230, 8.8, M12x230
3	140018	8	WASHER, {PP:80140018} M12 x 24 x 2.5, 14MM
4	140046	8	WASHER, LOCK, {PP:80140046} Belleville, M12, 12MM
5	89706685	8	NUT, M12

WWW.KOBMO.BY

18.06(01) HITCH

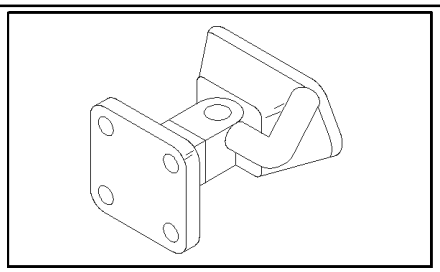

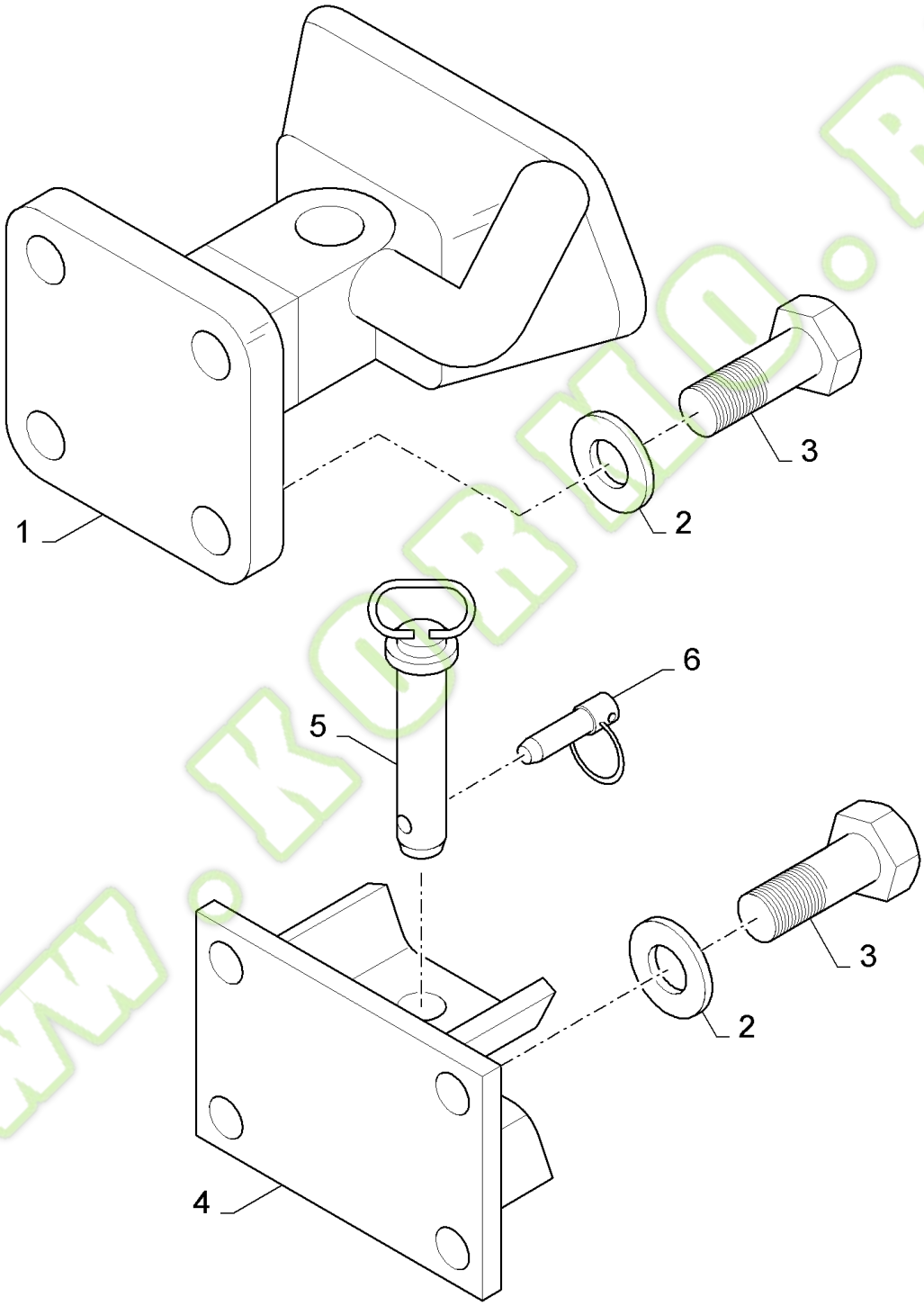

www.KOBMO.BY

FX50 SELF-PROPELLED FORAGE HARVESTER (10/02-)

18.06(01) HITCH

Ref	Part Number	Qty	Description
1	753439	1	TOW HOOK, {PP:80753439}
2	140048	8	WASHER, LOCK, {PP:80140048} Belleville, M16, 16MM
3	120090	8	SCREW, {PP:80120090} Hex, M16 x 50, 8.8, Hex, M16 x 50, 8.8
4	84042072	1	SUPPORT, , NOT FOR NA AND GERMANY
5	84042171	1	PIN, , NOT FOR NA AND GERMANY
6	84042195	1	PIN, , NOT FOR NA AND GERMANY

WWW.KOBMO.BY

18.07(01) FRAME CHOPPER BODY FOR CAT II, 3 POINT LINKAGES

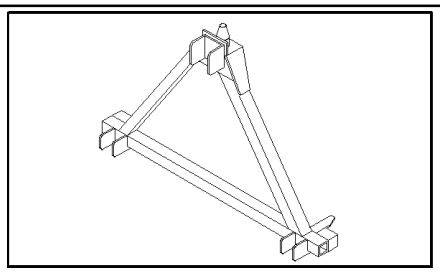

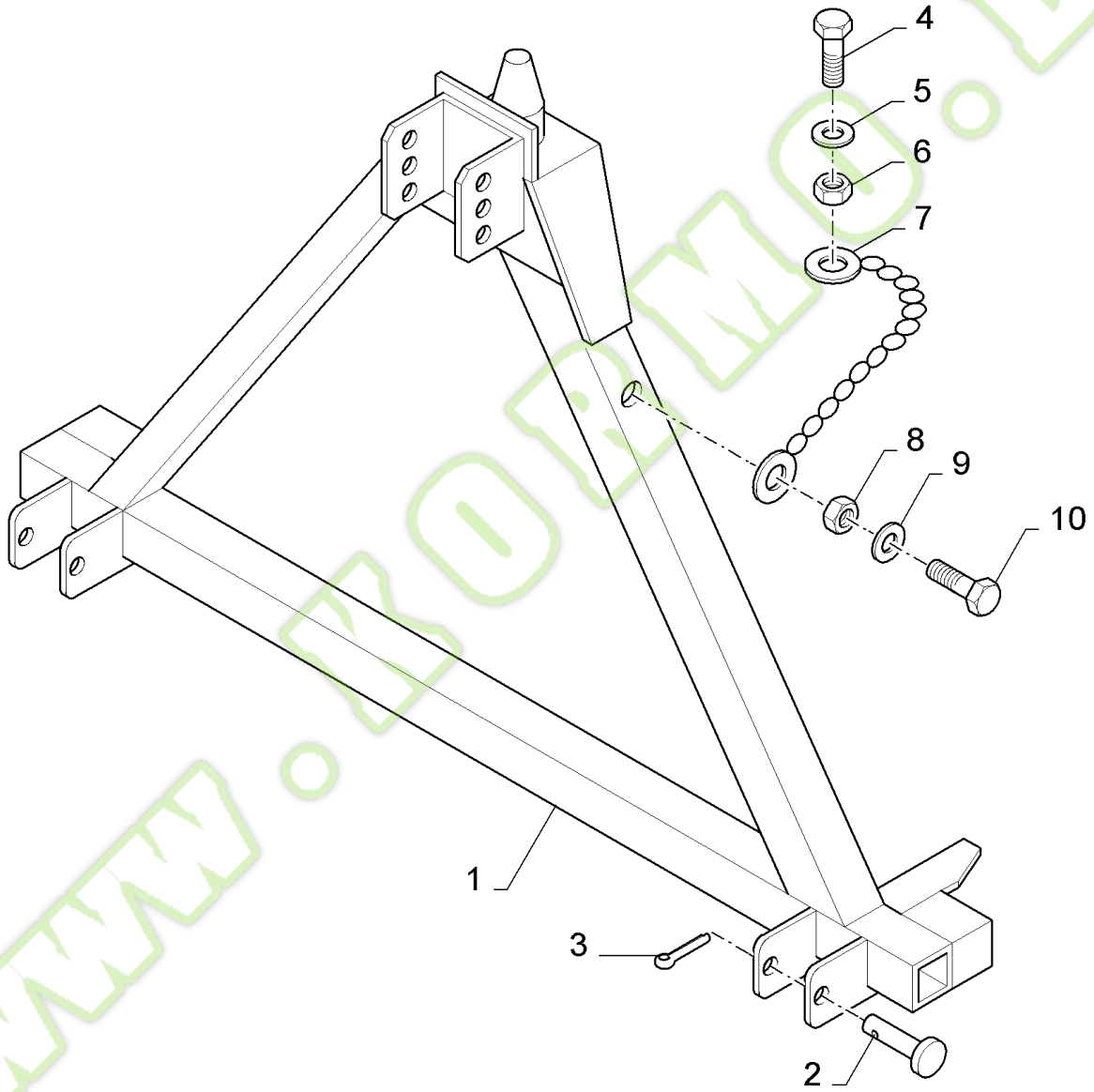

www.KORMO.BY

FX50 SELF-PROPELLED FORAGE HARVESTER (10/02-)

18.07(01) FRAME CHOPPER BODY FOR CAT II, 3 POINT LINKAGES

Ref	Part Number	Qty	Description
1	84817310	1	SUPPORT,
2	84019872	3	ROD,
3	412389	3	PIN, SPLIT (COTTER), {PP:80412389}
4	9706702	1	SCREW, {PP:89706702} Hex, M12 x 50, 8.8, M12x50
5	140046	1	WASHER, LOCK, {PP:80140046} Belleville, M12, 12MM
6	89706685	1	NUT, M12
7	84023457	1	CHAIN,
8	100016	1	NUT, {PP:80100016} M10, Cl 8, M10
9	140045	1	WASHER, LOCK, {PP:80140045} Belleville, M10, 10MM
10	43138	1	SCREW, {PP:80043138} Hex, M10 x 20, 8.8, Full Thd, M10x20

www.KOBMO.BY

18.07A(01) FRAME CHOPPER BODY FOR CAT II AND III, 3 POINT LINKAGES

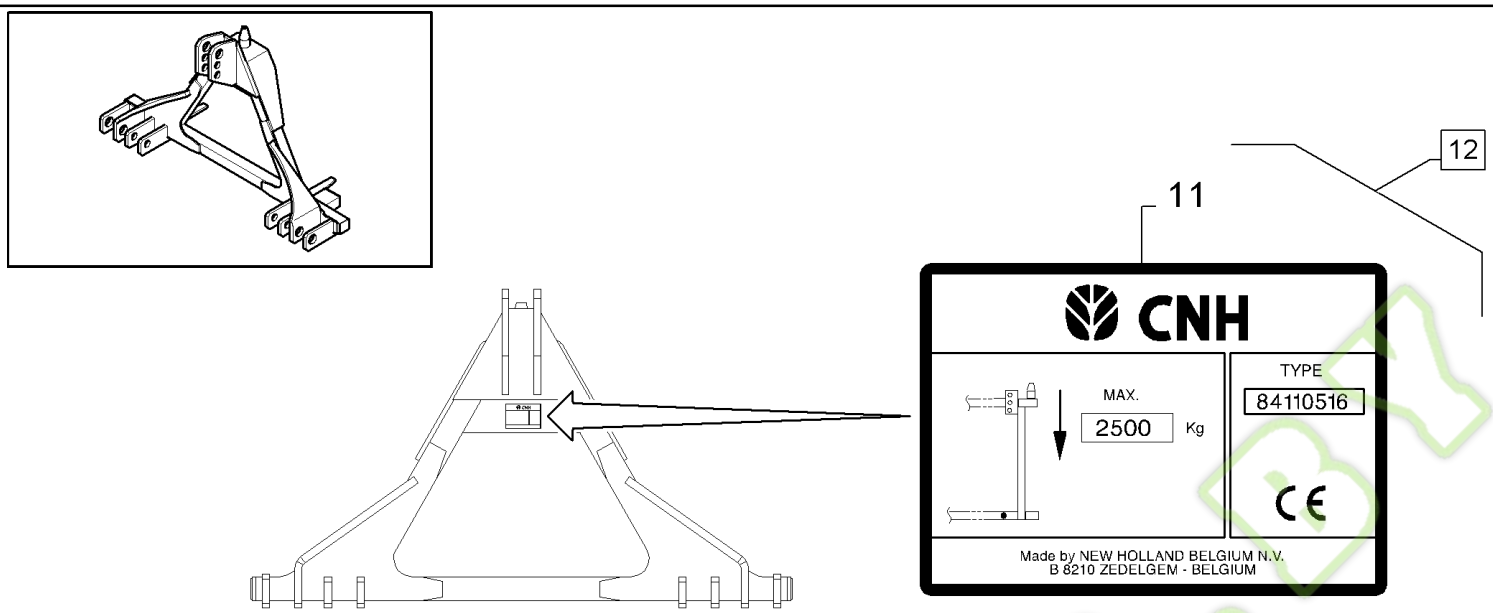

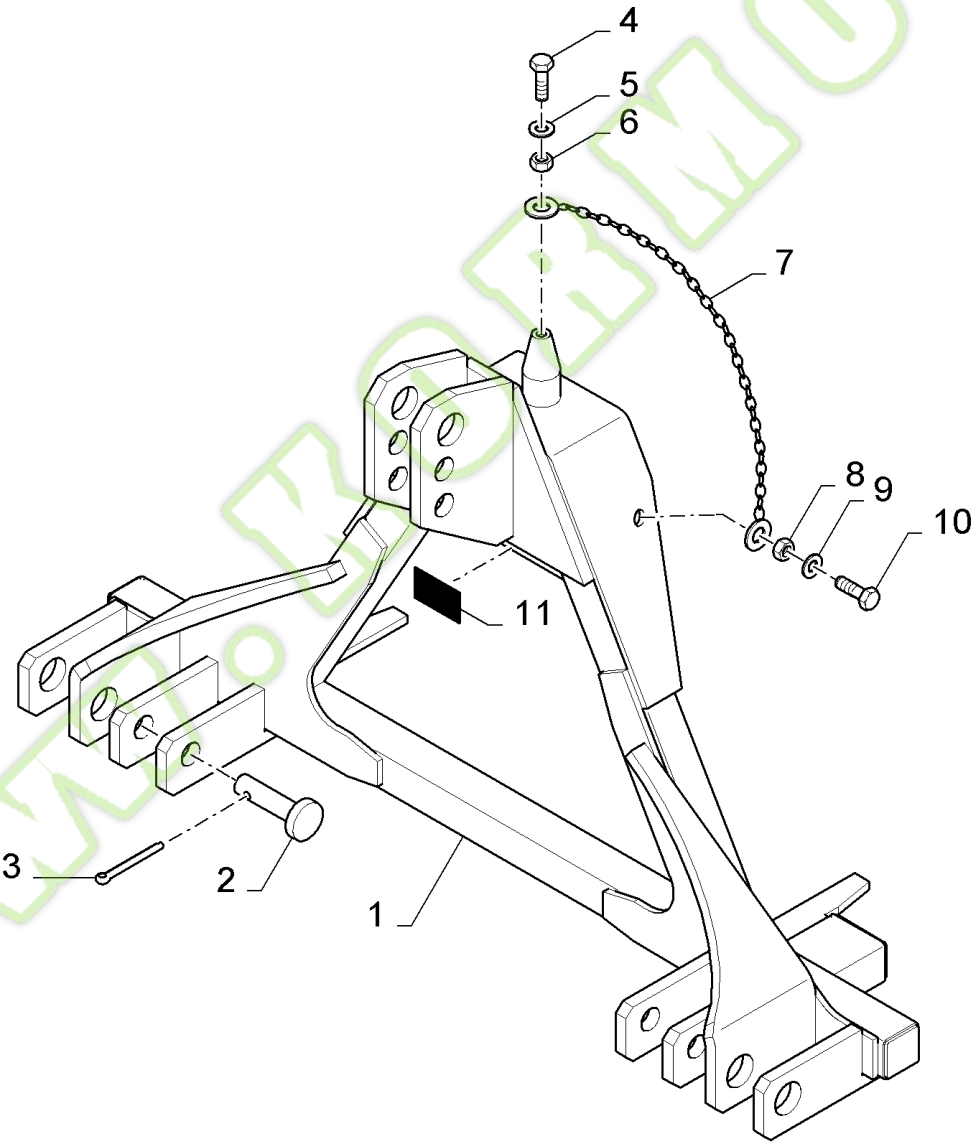

www.BOMO.BY

FX50 SELF-PROPELLED FORAGE HARVESTER (10/02-)

18.07A(01) FRAME CHOPPER BODY FOR CAT II AND III, 3 POINT LINKAGES

Ref	Part Number	Qty	Description
1	84452630	1	SUPPORT,
2	84019872	3	ROD,
3	412389	3	PIN, SPLIT (COTTER), {PP:80412389}
4	9706702	1	SCREW, {PP:89706702} Hex, M12 x 50, 8.8, M12x50
5	140046	1	WASHER, LOCK, {PP:80140046} Belleville, M12, 12MM
6	89706685	1	NUT, M12
7	84023457	1	CHAIN,
8	100016	1	NUT, {PP:80100016} M10, Cl 8, M10
9	140045	1	WASHER, LOCK, {PP:80140045} Belleville, M10, 10MM
10	43138	1	SCREW, {PP:80043138} Hex, M10 x 20, 8.8, Full Thd, M10x20
11	84455004	1	DECAL,
12	84110516	1	DIA KIT, HARVESTER, (1 to 11)

WWW.KOBMO.BY

18.08(01) WORKSHOP STAND CHOPPER BODY

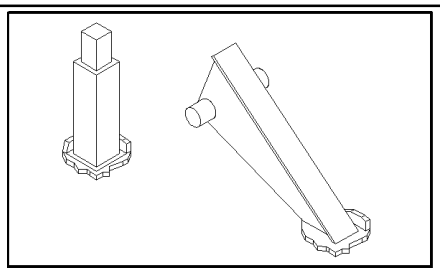

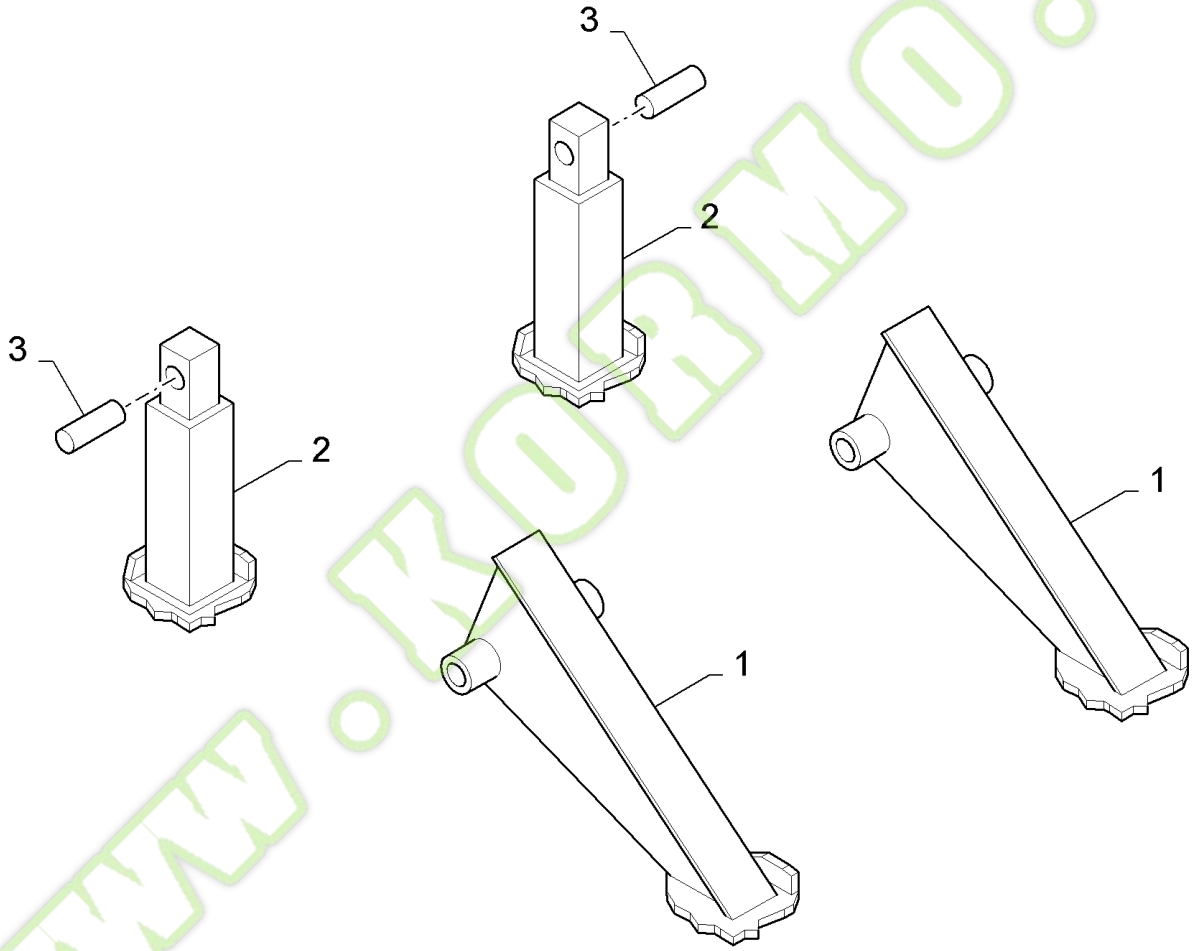

www.KOBMO.BY

18.08(01) WORKSHOP STAND CHOPPER BODY

Ref	Part Number	Qty	Description
	84016836	1	DIA KIT, HARVESTER, (1 to 3)
1	84005172	2	SUPPORT,
2	84443735	2	SUPPORT,
3	84014750	2	PIN,

www.KORMO.BY

18.09(01) HYDRAULIC JACK ASSEMBLY

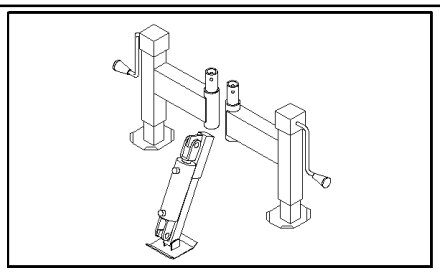

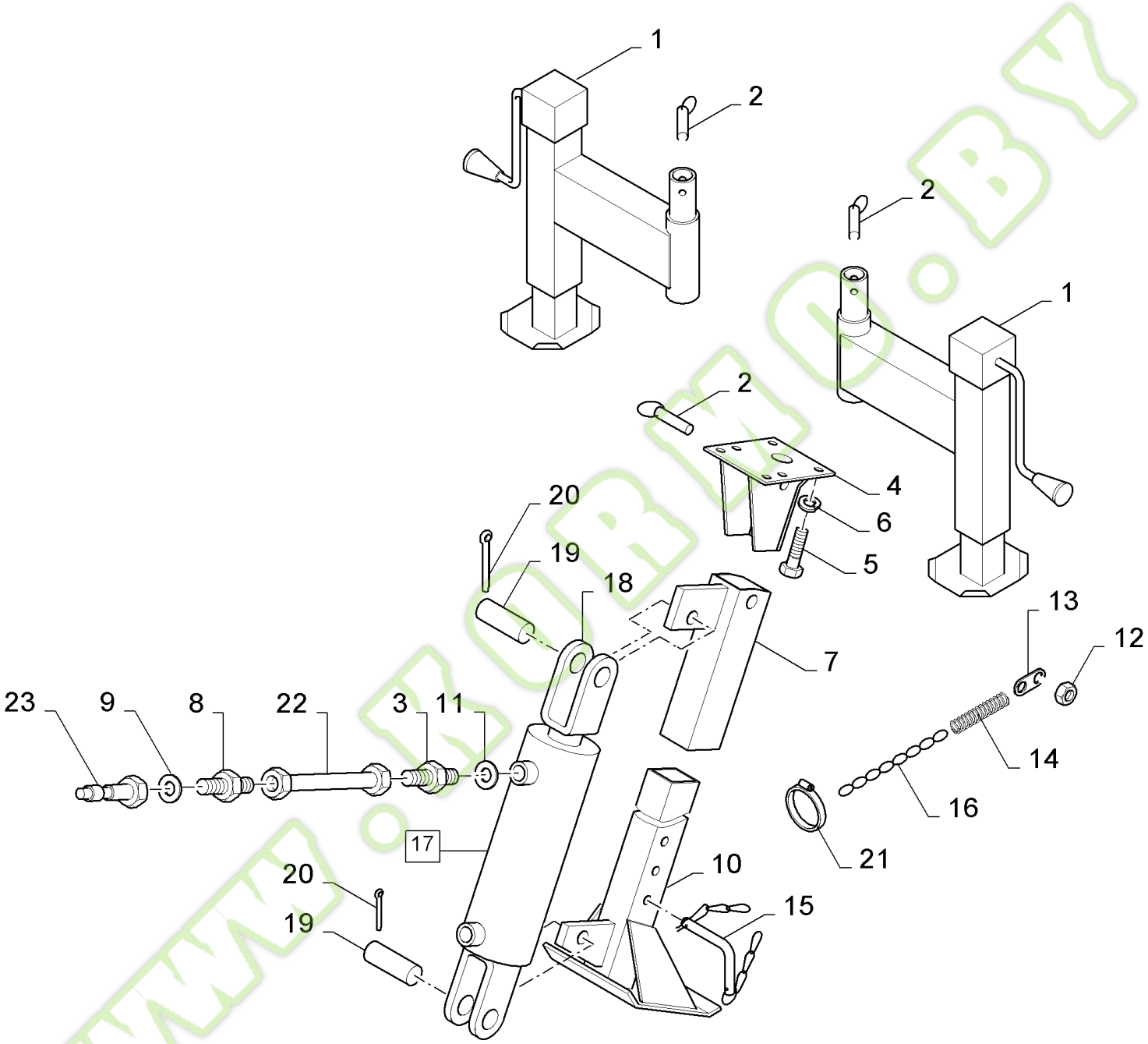

www.KOBMO.BY

FX50 SELF-PROPELLED FORAGE HARVESTER (10/02-)

18.09(01) HYDRAULIC JACK ASSEMBLY

Ref	Part Number	Qty	Description
1	84053716	1	JACK, LH, BSN C277
1	84446471	1	JACK, , ASN D278
1	84053715	1	JACK, RH, BSN C277
1	84446469	1	JACK, , ASN D278
2	84014750	3	PIN,
3	397977	2	CONNECTOR, HYD., {PP:80397977}
4	84058838	1	SUPPORT, , BSN C277
4	84446474	1	SUPPORT, , ASN D278
5	43167	6	BOLT, {PP:80043167} Hex, M16 x 30, 8.8, Full Thd, Hex, M16 x 30, 8.8, Full Thd
6	140048	6	WASHER, LOCK, {PP:80140048} Belleville, M16, 16MM
7	84058388	1	SUPPORT, , BSN C277
7	84446476	1	SUPPORT, , ASN D278
8	84057735	2	CONNECTOR, HYD.,
9	128825	2	O-RING, {PP:80128825} 8-1, 90 Duro, .644" ID x .087" Thk, 8-1, 90 Duro, .644" ID x .087" Thk
10	84058389	1	SUPPORT, , BSN C277
10	84446478	1	SUPPORT, , ASN D278
11	80358377	2	VALVE, RESTRICTOR,
12	89706690	2	NUT, CL 8, M8 x 1.25 x 13.0
13	336886	2	LEVER, {PP:80336886}
14	180067	2	SPRING, {PP:80180067}
15	84056982	1	PIN,
16	89839041	2	CHAIN,
17	84056984	1	HYDRAULIC CYLINDER, (18)
18	84038110	1	KIT, SEALS,
19	514112	2	PIN, {PP:80514112}
20	130011	2	PIN, SPLIT (COTTER), {PP:80130011} M5 x 40,
21	381145	2	CLAMP, {PP:80381145}
22	9506284	2	HOSE, {PP:89506284}
23	86544945	2	COUPLING, QUICK, MALE,

www.KOBMO.BY

18.10(01) SPECIAL TOOLS

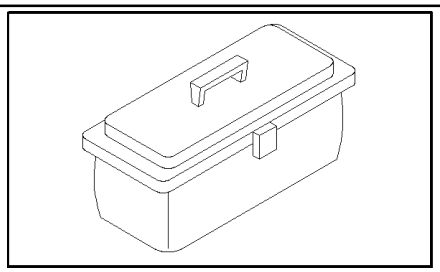

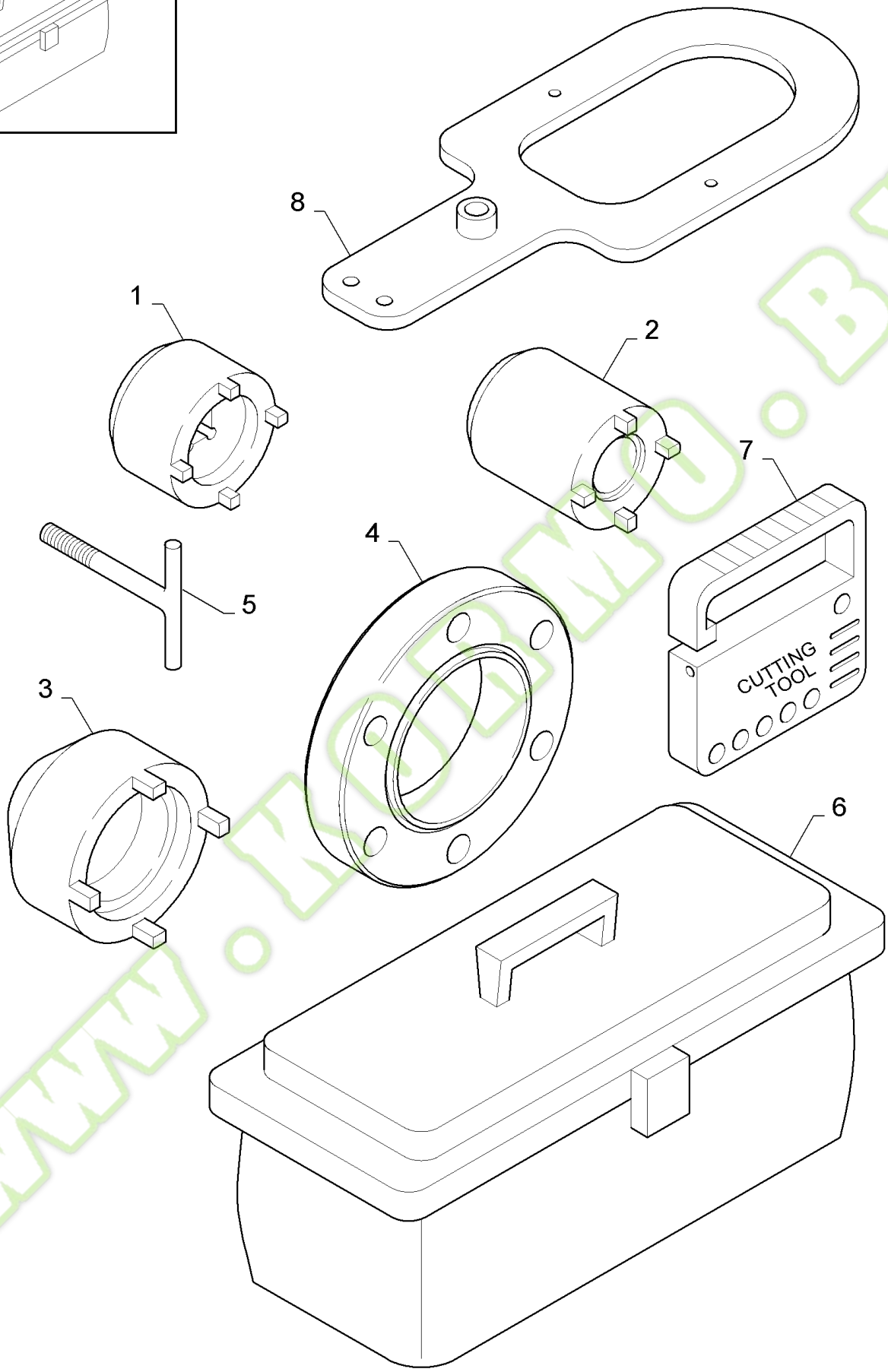

www.KOBMO.BY

18.10(01) SPECIAL TOOLS

Ref	Part Number	Qty	Description
1	84038243	1	TOOL, SPECIAL,
2	84038244	1	TOOL, SPECIAL,
3	84038245	1	TOOL, SPECIAL,
4	84038246	1	TOOL, SPECIAL,
5	84038066	1	ROD, Knife sharpener
6	84042537	1	BOX, TOOL,
7	84043810	1	TOOL, SPECIAL, Optic cable knife
8	84074673	1	TOOL, SPECIAL,

www.KOBMO.BY

18.11(01) 30 KM/H KIT - 2-WHEEL DRIVE

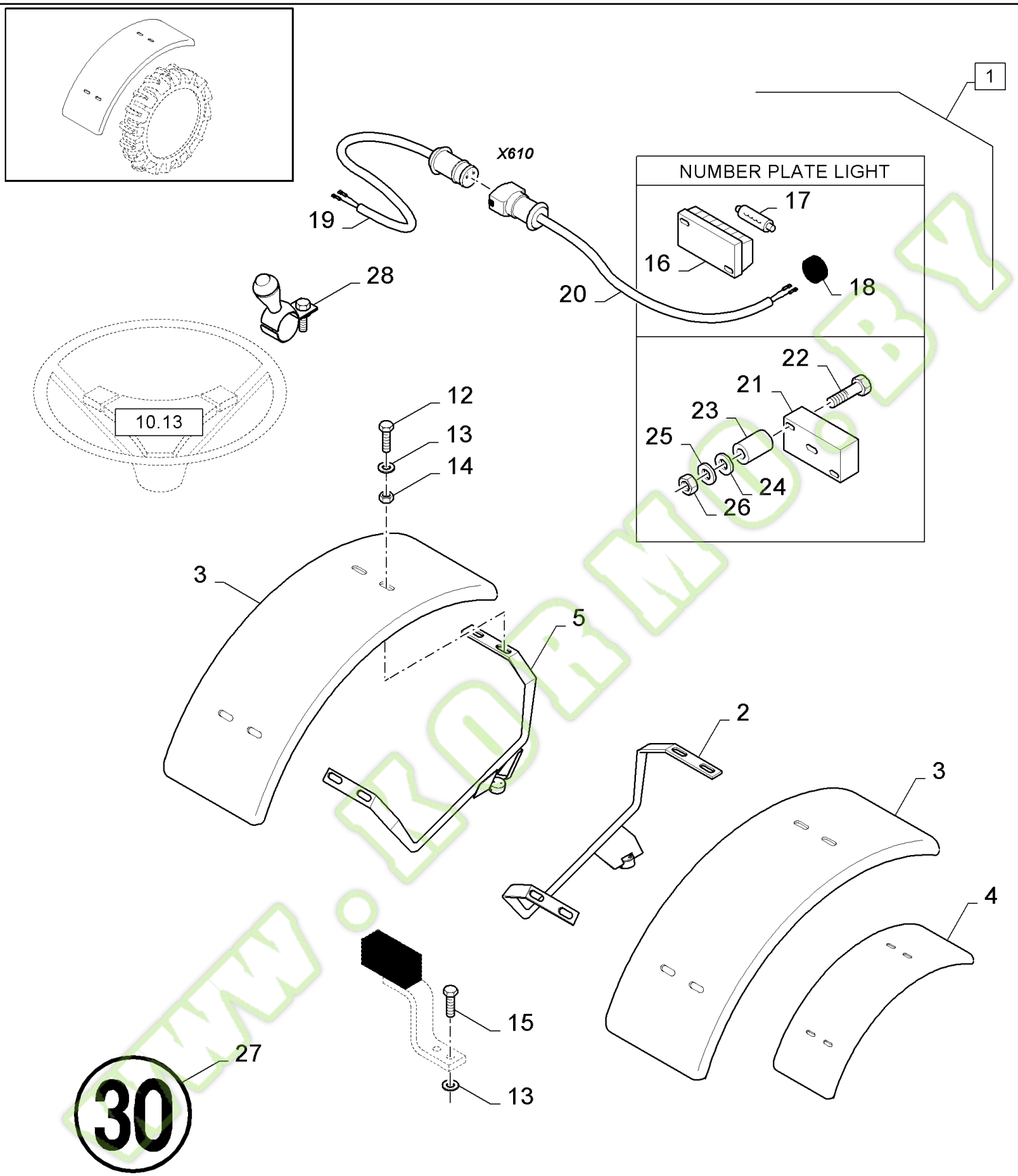

www.KOBMOBY

FX50 SELF-PROPELLED FORAGE HARVESTER (10/02-)

18.11(01) 30 KM/H KIT - 2-WHEEL DRIVE

Ref	Part Number	Qty	Description
1	84039001	1	DIA KIT, HARVESTER, (INCLUDES ALL ITEMS)
2	84039000	1	FENDER, REAR, RH,2WD
3	9848831	2	FENDER, FRONT, {PP:89848831}
4	9844736	2	SUPPORT, {PP:89844736}
5	84038999	1	FENDER, REAR, LH,2WD
12	308761	8	SCREW, {PP:80308761} Short NK, M8 x 25, Cl8.8, Full Thd, M8x25
13	322358	8	WASHER, LOCK, {PP:80322358} Belleville, M8, 8MM
14	89706690	8	NUT, CL 8, M8 x 1.25 x 13.0
16	445502	1	LAMP, {PP:80445502}
17	470017	1	BULB, {PP:80470017}
18	399986	1	GROMMET, {PP:80399986}
19	84001860	1	HARNESS, WIRE,
20	84001895	1	HARNESS, WIRE,
21	84039003	1	BUSHING,
22	412473	2	SCREW, {PP:80412473}
23	441370	2	BUSHING, {PP:80441370}
24	335872	2	WASHER, {PP:80335872} 4MM
25	322355	2	WASHER, LOCK, {PP:80322355} Belleville, M4, 4MM
26	100012	2	NUT, {PP:80100012} M4, Cl 8, M4
27	84039535	3	DECAL,
28	84432447	1	KNOB,

www.KOBMO.BY

18.11A(01) 30 KM/H KIT - 4-WHEEL DRIVE

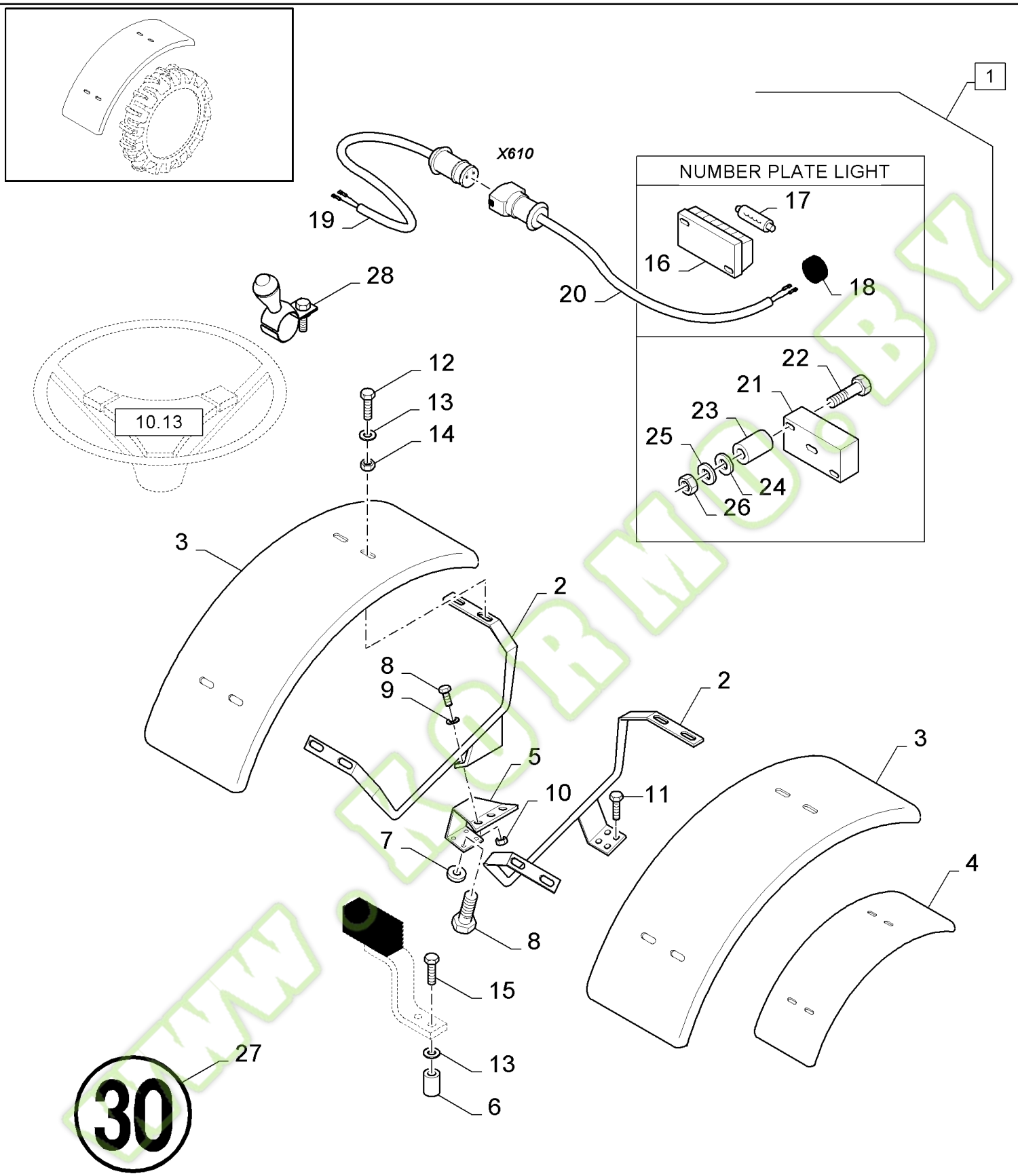

FX50 SELF-PROPELLED FORAGE HARVESTER (10/02-)

18.11A(01) 30 KM/H KIT - 4-WHEEL DRIVE

Ref	Part Number	Qty	Description
1	84038993	1	DIA KIT, HARVESTER, (INCLUDES ALL ITEMS)
2	84038991	1	FENDER, REAR, REAR LH, 4WD
2	84038992	1	FENDER, REAR, REAR RH, 4WD
3	9848831	2	FENDER, FRONT, {PP:89848831}
4	9844736	2	SUPPORT, {PP:89844736}
5	84038989	1	SUPPORT, 4WD
6	326136	2	SPACER, {PP:80326136} 4WD
7	144607	2	SPACER, {PP:80144607} 4WD
8	9706702	3	SCREW, {PP:89706702} Hex, M12 x 50, 8.8, M12x50, 4WD
9	140046	3	WASHER, LOCK, {PP:80140046} Belleville, M12, 12MM, 4WD
10	89706685	3	NUT, M12, 4WD
11	410532	8	BOLT, {PP:80410532} Hex, M12 x 55, 12.9, M12x55, 4WD
12	308761	8	SCREW, {PP:80308761} Short NK, M8 x 25, Cl8.8, Full Thd, M8x25
13	322358	8	WASHER, LOCK, {PP:80322358} Belleville, M8, 8MM
14	89706690	8	NUT, CL 8, M8 x 1.25 x 13.0
15	43129	2	SCREW, {PP:80043129} Hex, M8 x 40, 8.8, M8x1.25
16	445502	1	LAMP, {PP:80445502}
17	470017	1	BULB, {PP:80470017}
18	399986	1	GROMMET, {PP:80399986}
19	84001860	1	HARNESS, WIRE,
20	84001895	1	HARNESS, WIRE,
21	84039003	1	BUSHING,
22	412473	2	SCREW, {PP:80412473}
23	441370	2	BUSHING, {PP:80441370}
24	335872	2	WASHER, {PP:80335872} 4MM
25	322355	2	WASHER, LOCK, {PP:80322355} Belleville, M4, 4MM
26	100012	2	NUT, {PP:80100012} M4, Cl 8, M4
27	84039535	3	DECAL,
28	84432447	1	KNOB,

www.KOBMO.BY

18.12(01) HYDRO-ENGINE LIFTING CHAIN

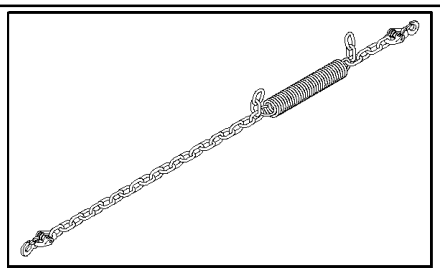

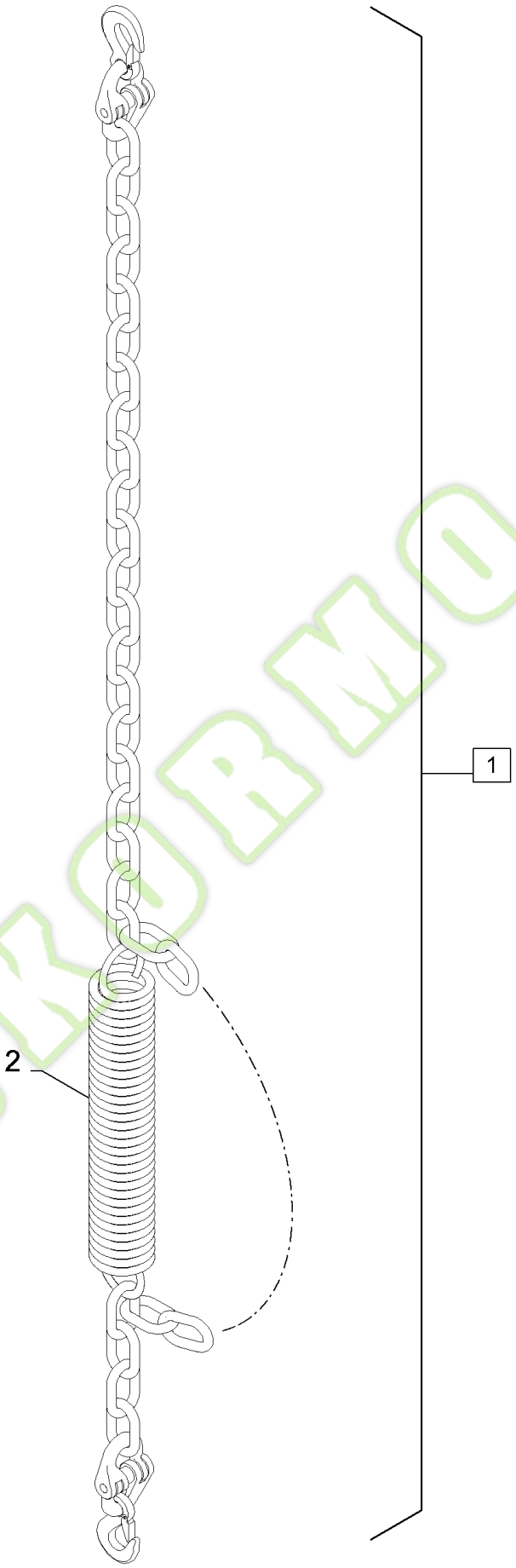

www.KOBMO.BY

FX50 SELF-PROPELLED FORAGE HARVESTER (10/02-)

18.12(01) HYDRO-ENGINE LIFTING CHAIN

Ref	Part Number	Qty	Description
1	84110017	1	DIA KIT, HARVESTER, (2), BSN C357
1	84111365	1	DIA KIT, HARVESTER, , ASN D358
2	56686	1	SPRING, {PP:80056686}

WWW.KORMO.BY

18.13(01) SUPPORT CROP PROCESSOR

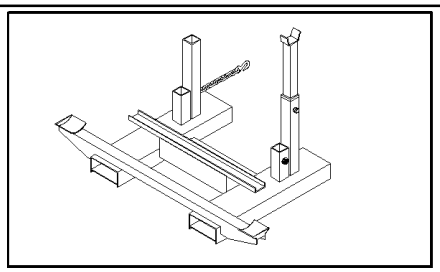

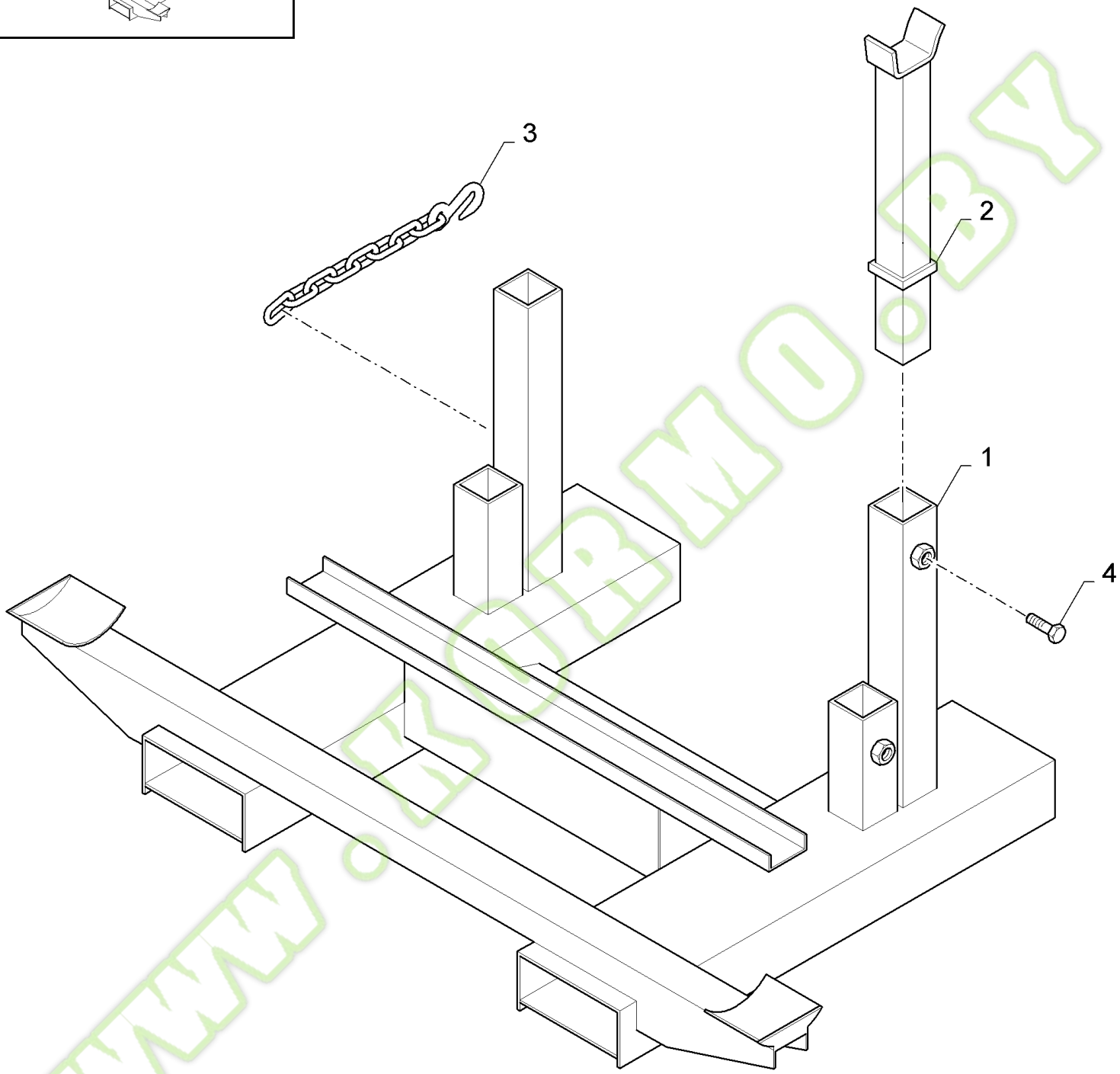

www.KBMOBY

FX50 SELF-PROPELLED FORAGE HARVESTER (10/02-)

18.13(01) SUPPORT CROP PROCESSOR

Ref	Part Number	Qty	Description
1	84434827	1	SUPPORT,
2	84434837	2	SUPPORT,
3	84807328	1	CHAIN,
4	300388	4	SCREW, {PP:80300388} Hex, M12 x 25, 8.8, M12x25

WWW.KOBMO.BY

18.14(01) SENSOR KIT DIRECT CUT HEADER

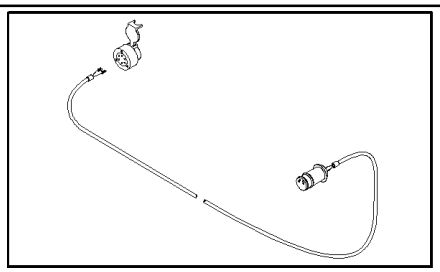

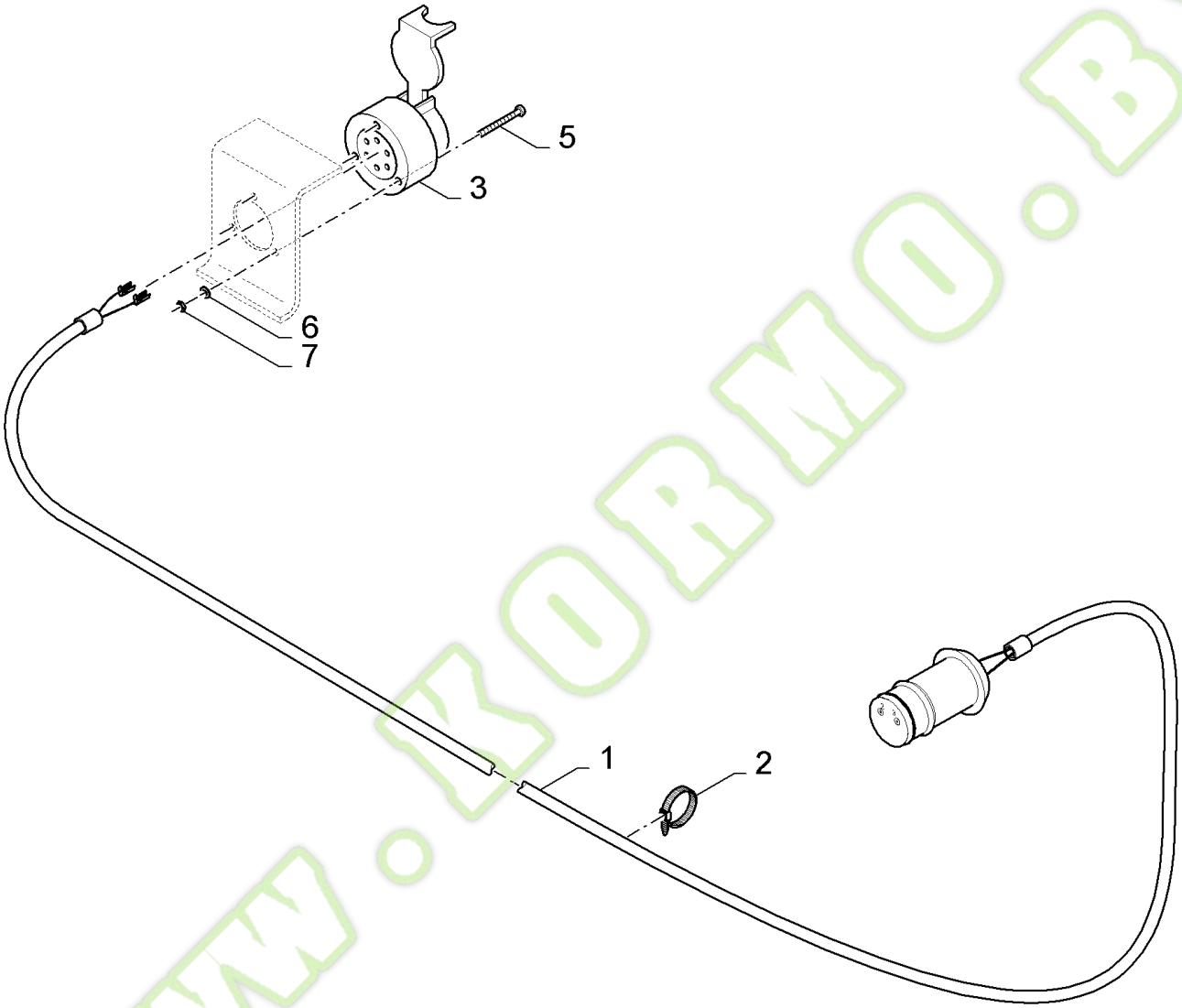

www.KOBMO.BY

FX50 SELF-PROPELLED FORAGE HARVESTER (10/02-)

18.14(01) SENSOR KIT DIRECT CUT HEADER

Ref	Part Number	Qty	Description
1	84446466	1	HARNESS, WIRE,
2	323597	8	STRAP, {PP:80323597}
3	398224	1	SOCKET, POWER, {PP:80398224}
5	86585708	3	SCREW, Cross Pan Hd, M4 x 40, M4x40
6	322355	3	WASHER, LOCK, {PP:80322355} Belleville, M4, 4MM
7	100012	3	NUT, {PP:80100012} M4, Cl 8, M4

www.KOBMO.BY

ATTACHMENTS	**ACCESSOIRES**	**ACCESORIO**	**UDSTYR**
ACCESSORIO	**ZUBEHÖR**	**EQUIPAMENTOS**	**HULPSTUKKEN**

SEC. 19

NOT APPLICABLE FOR THIS CATALOGUE
NON APPLICABILE PER QUESTO CATALOGO
PAS APPLICABLE POUR CE CATALOGUE
NICHT ANWENDBAR FÜR DIESEN KATALOG
NO APLICABLE PARA ESTE CATÁLOGO
NÃO APPLICABLE PARA NESTE CATÁLOGO
IKKE APLIKABEL FOR DENNE KATALOG
NIET VAN TOEPASSING VOOR DEZE CATALOGUS

www.BMO.BY

Ref	Part Number	Qty	Description

www.KORMO.BY

HEADERS	**BEC CUEILLEUR**	**BARRA**	**SKÆREBORDE**
BARRA	**SCHNEIDWERK**	**CABEÇALHO DE CEIFA**	**MAAIBORDEN**

SEC. 20

346W - 356W - 366W
SEE CATALOGUE 6032603500

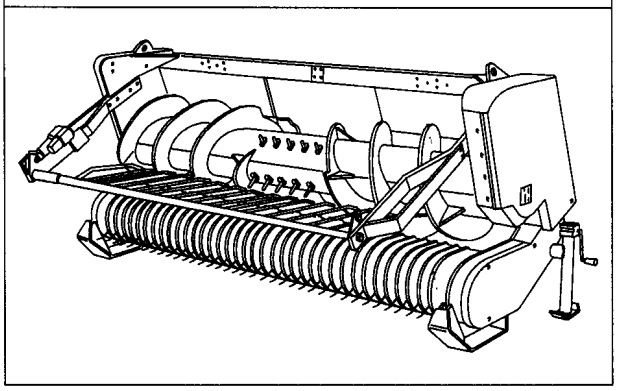

360N4
SEE CATALOGUE 6032602000

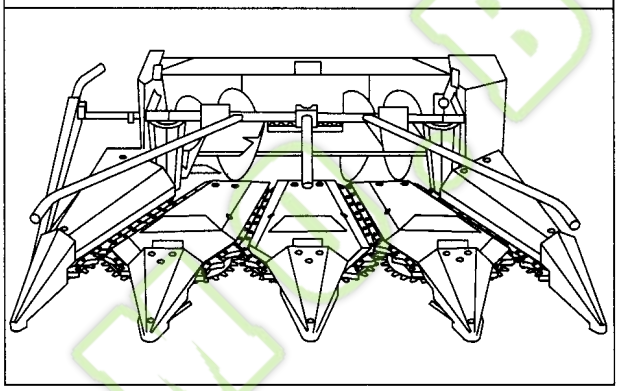

986F - MF600 Series
SEE CATALOGUE 6032700700

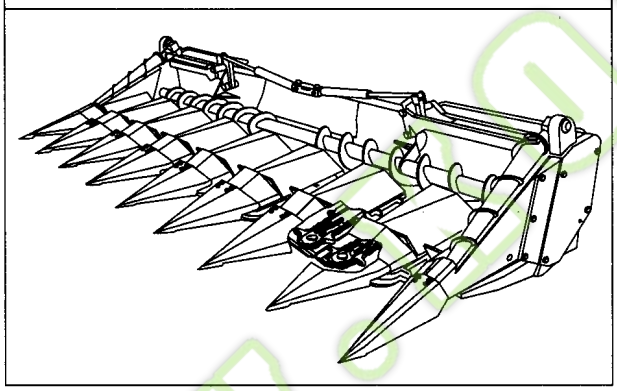

DC510
SEE CATALOGUE 6032603400

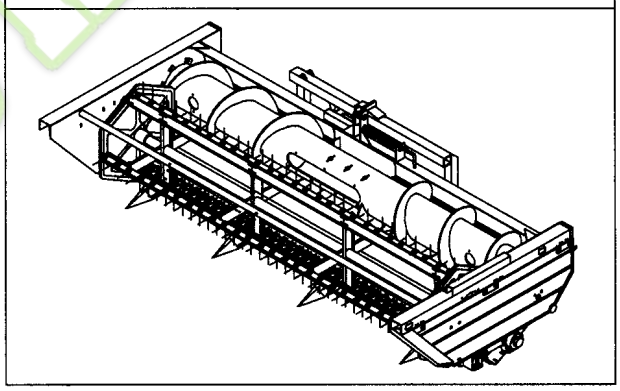

RI450
SEE CATALOGUE 6032603700

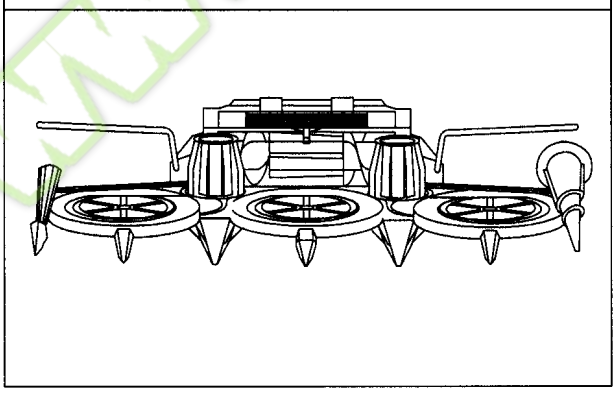

RI600
SEE CATALOGUE 6032603700

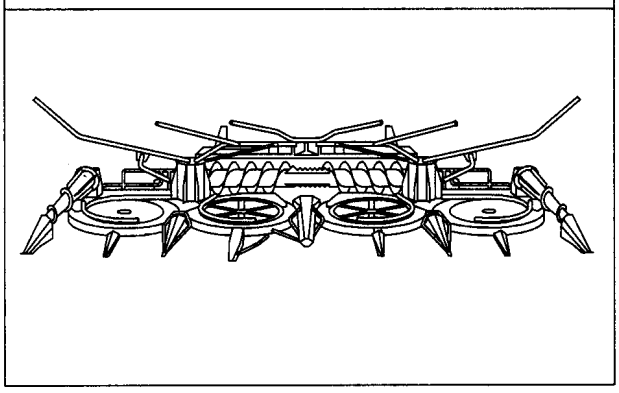

20.000(01) SECTION LIST 20

Ref	Part Number	Qty	Description

www.KOBMO.BY

www.kormo.by

Kormo.by